Electric Actuator

Rod Type **Guide Rod Type**

NEW

- Intermediate strokes have been added to the LEY63.
- Normally-closed solid state auto switches have been added.
- The JXC series step motor controller has been added.

RoHS

Step Motor (Servo/24 VDC) Servo Motor (24 VDC) Type

Rod Type *LEY Series* — Size: 16, 25, 32, 40 ▸p. 35

Long stroke:

Max. 500 mm (LEY32, 40)

Mounting variations

- Direct mounting: 3 directions, Bracket mounting: 3 types
- Either positioning or pushing control can be selected.
  It is possible to hold the actuator with the rod pushing a workpiece, etc.

Dust-tight/Water-jet-proof (IP65 Equivalent): **-X5** ▸p. 151

＊ Size: 25, 32
＊ The X5 is not CE/UL compliant.

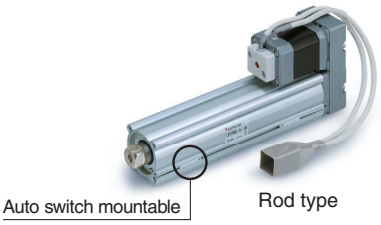

Rod type

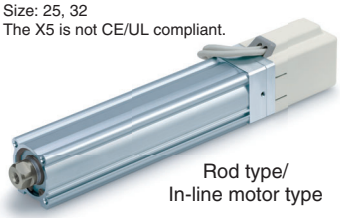

Rod type/
In-line motor type

Guide Rod Type *LEYG Series* — Size: 16, 25, 32, 40 ▸p. 105

Lateral end load: 5 times more[*1]

＊1 Compared with the rod type, size 25, and 100 mm stroke

Compatible with sliding bearings and ball bushing bearings
Compatible with moment loads and stoppers (sliding bearings)

- Either positioning or pushing control can be selected.
  It is possible to hold the actuator with the rod pushing a workpiece, etc.

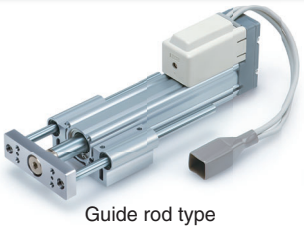

Guide rod type

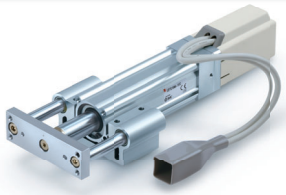

Guide rod type/
In-line motor type

AC Servo Motor Type

＊ Refer to "How to Order."

Rod Type *LEY Series* — Size: 25, 32, 63

Dust-tight/Water-jet-proof (IP65 Equivalent): **-X5** ▸p. 41, 48

＊ The X5 is not CE compliant.

- High-output motor (100/200/400 W)
- Improved high-speed transfer ability
- High acceleration/deceleration compatible (5000 mm/s²)
- Pulse input/CC-Link/SSCNETⅢ types
- With internal absolute encoder (For the LECSB/C/S)

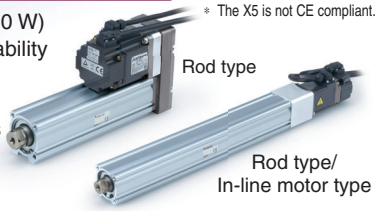

Guide Rod Type *LEYG Series* — Size: 25, 32

▸p. 111, 116

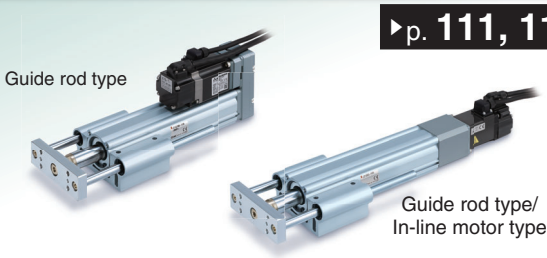

Step Motor (Servo/24 VDC) Servo Motor (24 VDC) Controller/Driver ▸p. 190

- **Step data input type**
  LECA6 Series (64 positioning points)
- **EtherCAT®/EtherNet/IP™/PROFINET/DeviceNet™/IO-Link direct input type**
  JXCE1/91/P1/D1/L1 Series
- **Programless type**
  LECP1 Series (14 positioning points)
- **Pulse input type**
  LECPA Series

AC Servo Motor Driver ▸p. 246

For incremental encoder

- Pulse input type/
  Positioning type
  LECSA Series

For absolute encoder

- Pulse input type
  LECSB Series
- CC-Link direct input type
  LECSC Series
- SSCNETⅢ type
  LECSS Series
- SSCNETⅢ/H type
  LECSS-T Series
- MECHATROLINK type
  LECY□ Series

＊ LECSS-T only

LEY Series

SMC

CAT.EUS100-83E-UK

LEY Series

Step Motor (Servo/24 VDC) **Servo Motor** (24 VDC) **Type**

Rod Type ***LEY Series*/Size: 16, 25, 32, 40**

Control of intermediate positioning and pushing is possible.
High precision with ball screws
(Positioning repeatability: ±0.02 mm)

Selectable motor mounting position

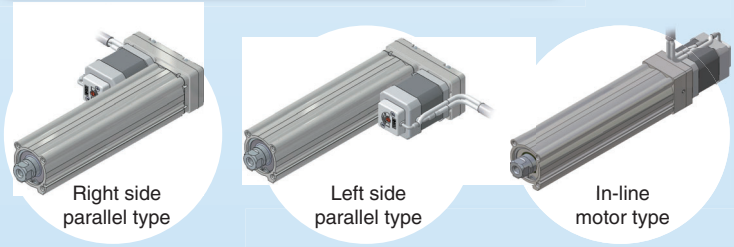

Right side parallel type | Left side parallel type | In-line motor type

Non-magnetizing lock mechanism (Option)

Prevents workpieces from dropping (Holding)

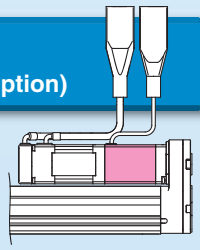

Motor cover available (Option)

* The cover has an opening.

Select from 2 types of actuator cables.

- Standard cable
- Robotic cable (Flexible cable)

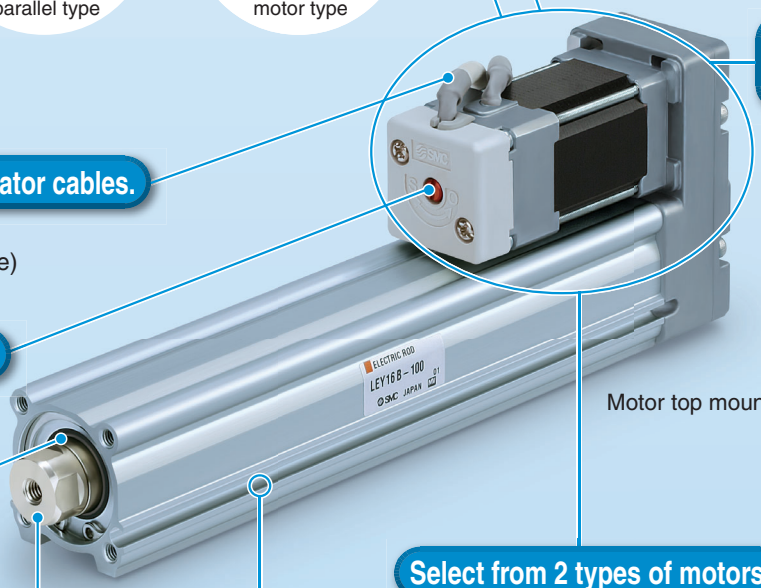

Motor top mounting type

Manual override screw

For manual piston rod operation
Adjustment operation is possible when the power is OFF.

Scraper

Prevents foreign matter from entering the device

Equipped with scrapers as standard

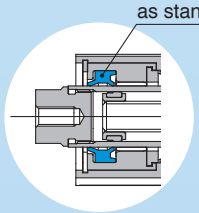

Select from 2 types of motors.

- **Step motor (Servo/24 VDC)**
  Ideal for the low-speed transfer of heavy loads and pushing operations
- **Servo motor (24 VDC)**
  Stable at high speeds
  Silent operation

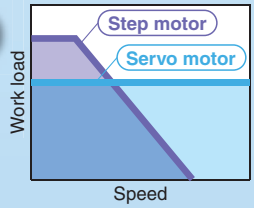

Mounting groove for auto switches

For checking the limit and the intermediate signal
Applicable to the D-M9□, D-M9□E, and D-M9□W (2-color indicator)

* The auto switches should be ordered separately. Refer to pages 101 to 103 for details.

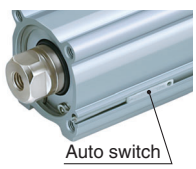

Auto switch

2-color indicator solid state auto switch

Appropriate setting of the mounting position can be performed without mistakes.

A green light lights up at the optimum operating range.

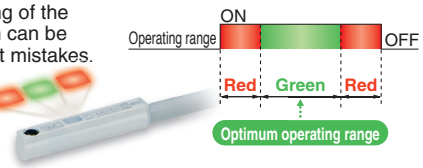

p. 97, 98

Rod end brackets

Single knuckle joint | Double knuckle joint | Simple joint

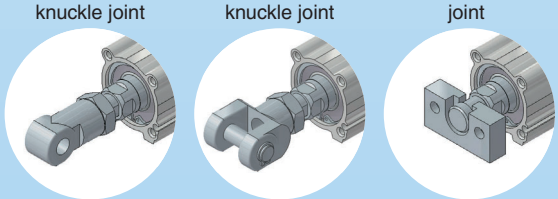

SMC

AC Servo Motor Type

Rod Type *LEY Series*/Size: 25, 32, 63

- High-output motor (100/200/400 W)
- Improved high-speed transfer ability
- High acceleration/deceleration compatible (5000 mm/s²)
- Pulse input/CC-Link direct input/SSCNET Ⅲ types
- With internal absolute encoder
  ＊ An incremental encoder can also be selected.
- Positioning repeatability: ±0.01 mm (High-precision type)

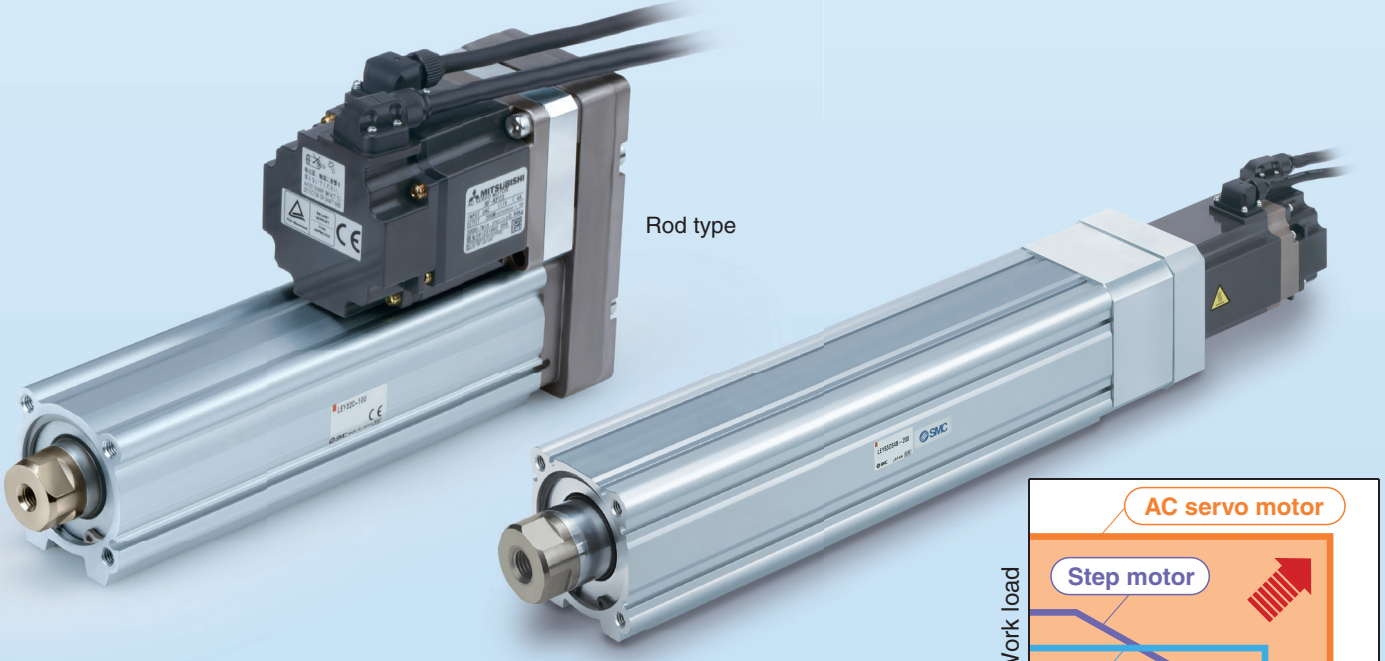

Rod type/In-line motor type

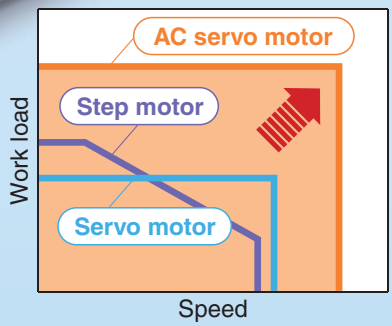

Large bore size 63

Selectable motor mounting position (4 directions)

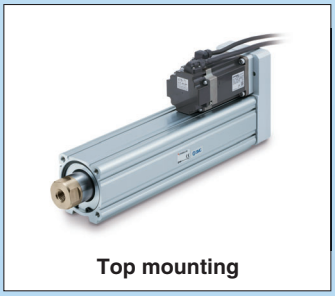
Top mounting

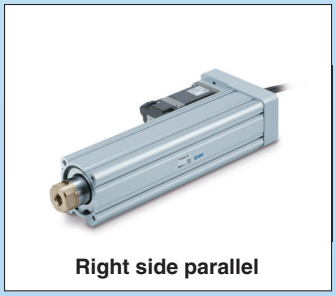
Right side parallel

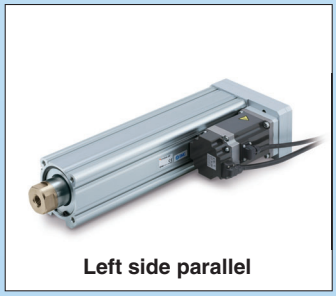
Left side parallel

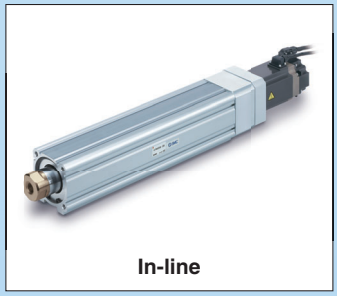
In-line

- Max. work load [kg]

	Top/Parallel	In-line
Horizontal	200	80
Vertical	115	72

- Max. force [N]

Top/Parallel	3343
In-line	1910

- High-output motor: **400 w**
- Max. speed: **1000 mm/s**
  ＊ 500 mm stroke
- Dust-tight/Water-jet-proof specification (IP65 equivalent)
  ＊ Option

Step Motor (Servo/24 VDC) **Servo Motor (24 VDC)** Type

Guide Rod Type *LEYG Series*/Size: 16, 25, 32, 40

Compact, integrated guide rods Lateral load resistance and high non-rotating accuracy

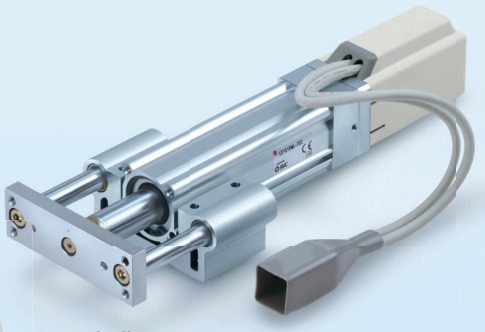

In-line motor type

Compatible with sliding bearings and ball bushing bearings

- **Sliding bearings**
  Suitable for lateral load applications such as when using a stopper where impact is applied
- **Ball bushing bearings**
  Smooth operation suitable for pushers and lifters

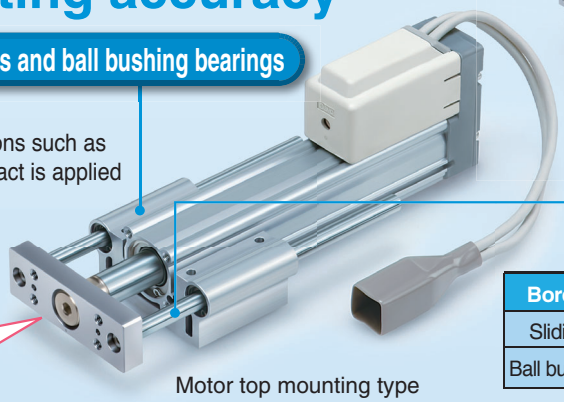

Motor top mounting type

Improved rigidity

Lateral end load: 5 times more[*1]

*1 Compared with the rod type, size 25, and 100 mm stroke

Non-rotating accuracy improved by using two guide rods

Bore size [mm]	16	25	32	40
Sliding bearings	±0.06°		±0.05°	
Ball bushing bearings	±0.05°	±0.04°		

When the cylinder is retracted (initial value), the non-rotating accuracy without a load and without deflection of the guide rods will be below the values shown in the table above.

AC Servo Motor Type

Guide Rod Type *LEYG Series*/Size: 25, 32

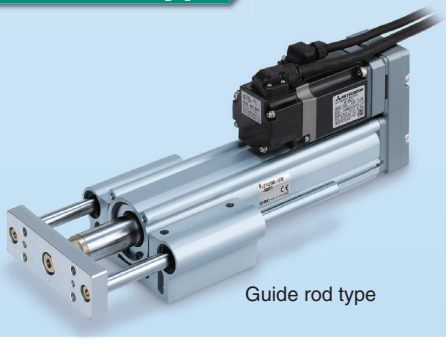

Guide rod type

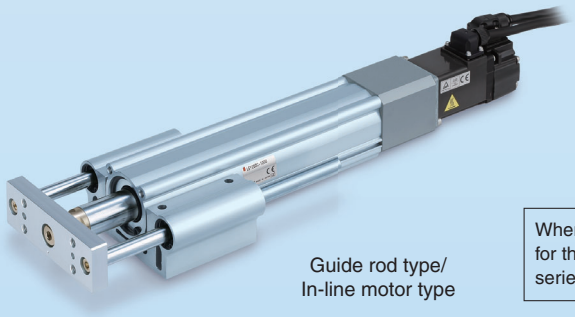

Guide rod type/
In-line motor type

When using auto switches for the guide rod type LEYG series, refer to page 187.

Mounting Variations

Direct Mounting

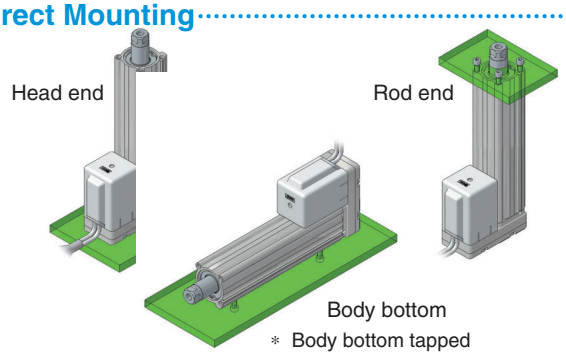

Bracket Mounting

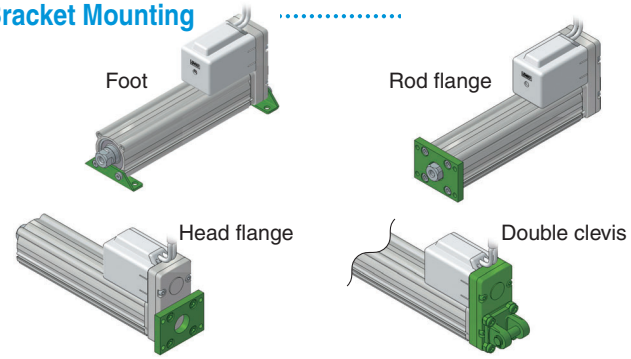

Application Examples

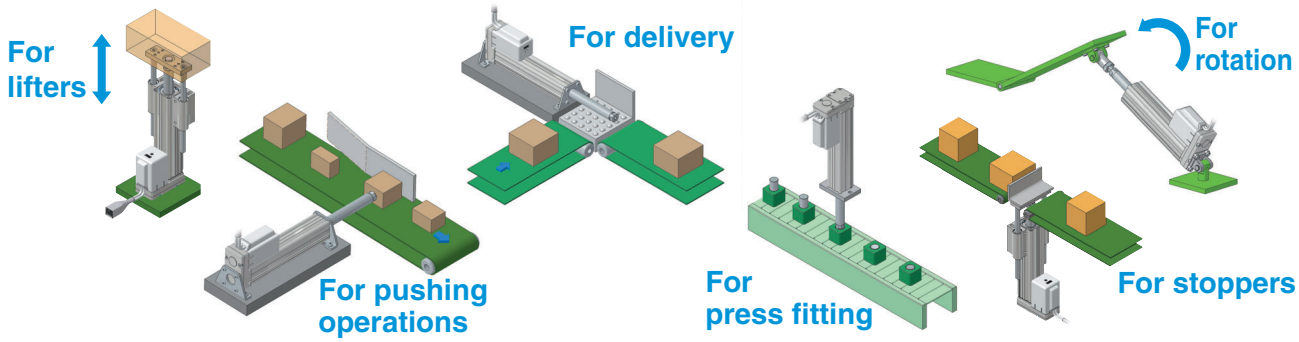

Dust-tight/Water-jet-proof (IP65 Equivalent)

●Enclosure: IP65 equivalent

(Refer to page 150.)

●Max. stroke: 500 mm*1

*1 For size 32

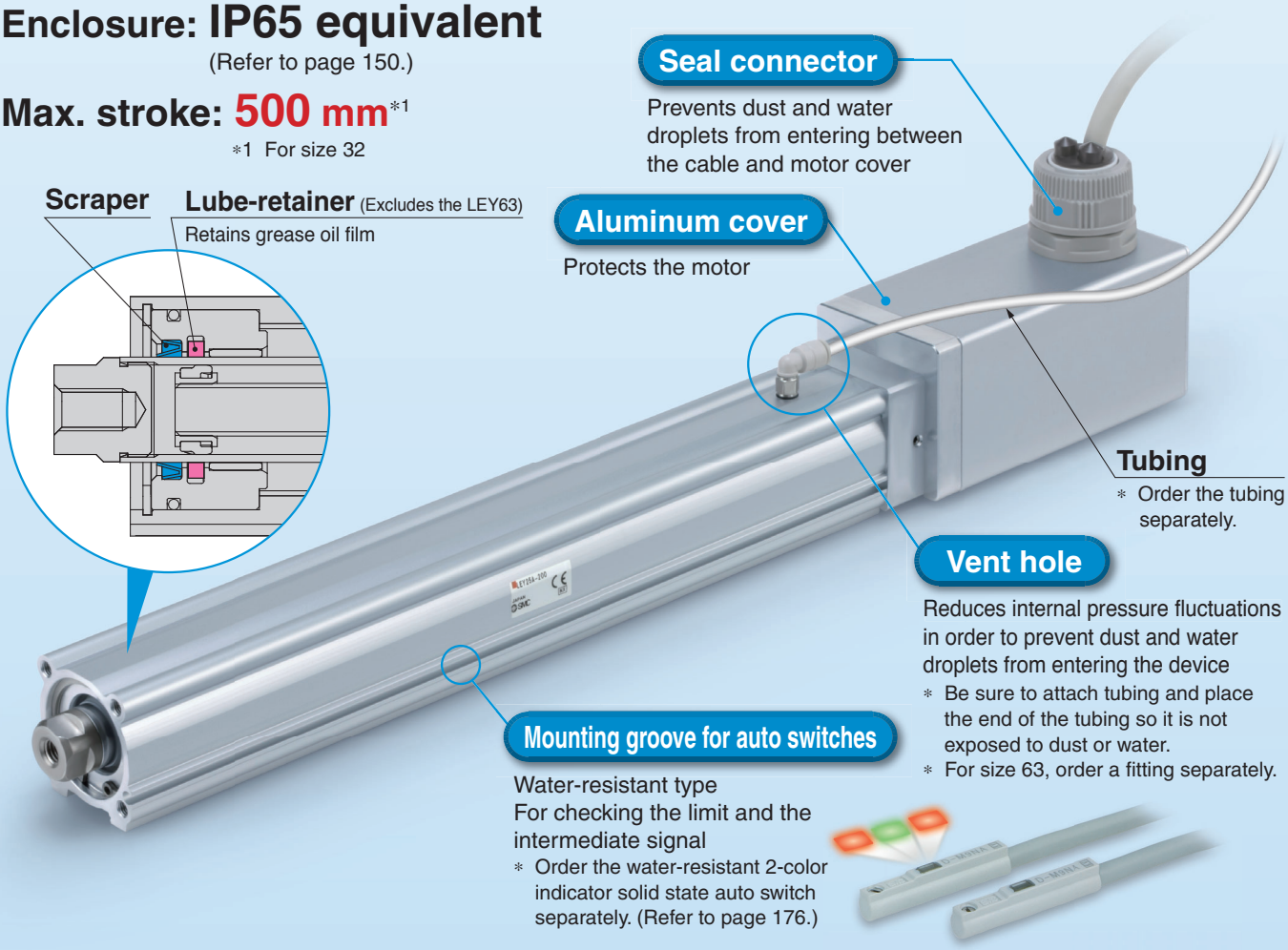

LEY-X5 (Refer to page 151.)

Size: 25, 32

Step Motor (Servo/24 VDC) Type

Servo Motor (24 VDC) Type

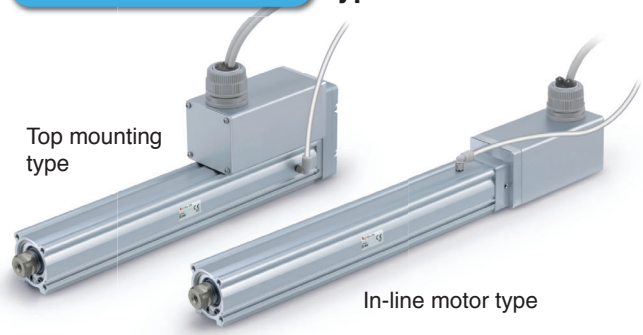

LEY-X5 (Refer to page 41.)

AC Servo Motor (100/200 W) Type

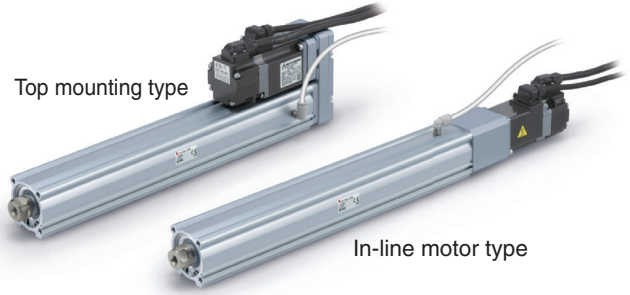

LEY63□□□-□P

(Refer to page 41./Option)

Size: 63

AC Servo Motor (400 W) Type

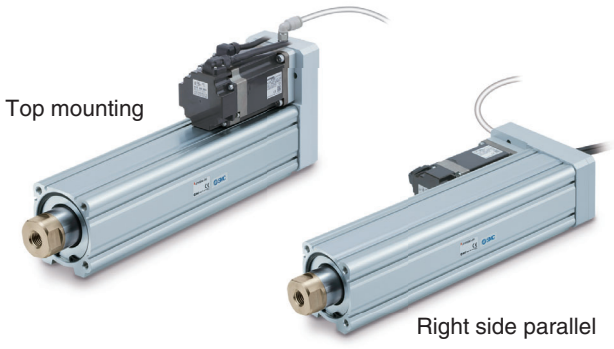

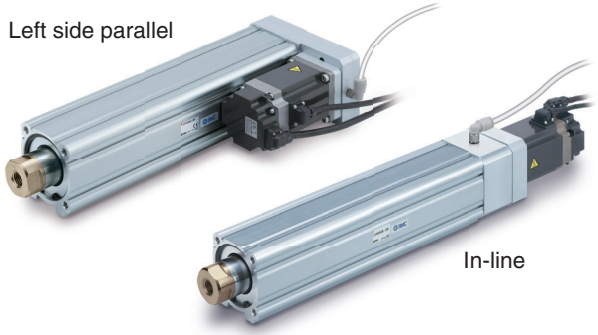

▶p. 191

Simple setting allows for immediate use!

◎"Easy Mode" for simple setting

For immediate use, select "Easy Mode."

Servo motor
(24 VDC)
LECA6

<When a PC is used>
Controller setting software

- Step data setting, test drive, jogging, and move for the constant rate can be set and operated on one screen.

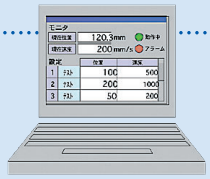

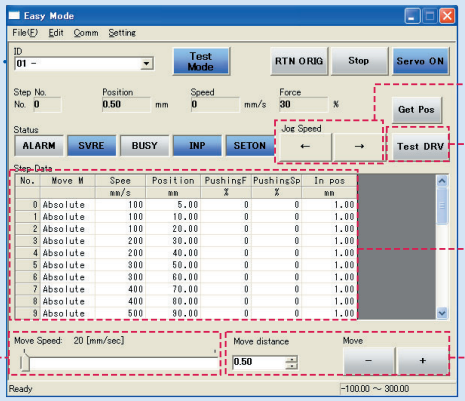

<When a TB (teaching box) is used>

- The simple screen without scrolling promotes ease of setting and operation.
- Choose an icon from the first screen to select a function.
- Set the step data and check the monitor on the second screen.

Example of setting the step data

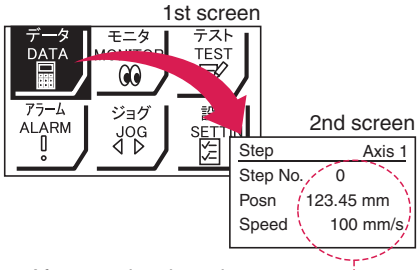

After entering the values, they can be registered by pressing "SET."

Example of checking the operation status

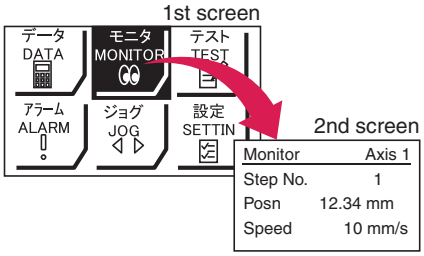

The operation status can be checked.

Teaching box screen

- **Data can be set by inputting only the position and speed.** (Other conditions are preset.)

Step	Axis 1
Step No.	0
Posn	50.00 mm
Speed	200 mm/s

Step	Axis 1
Step No.	1
Posn	80.00 mm
Speed	100 mm/s

◎"Normal Mode" for detailed setting

Select "Normal Mode" when detailed setting is required.

- Step data can be set in detail.
- Parameters can be set.
- Signals and terminal status can be monitored.
- JOG and constant rate movement, return to origin, test drive, and testing of forced output can be performed.

<When a PC is used> Controller setting software

- Step data setting, parameter setting, monitoring, teaching, etc., are displayed in different windows.

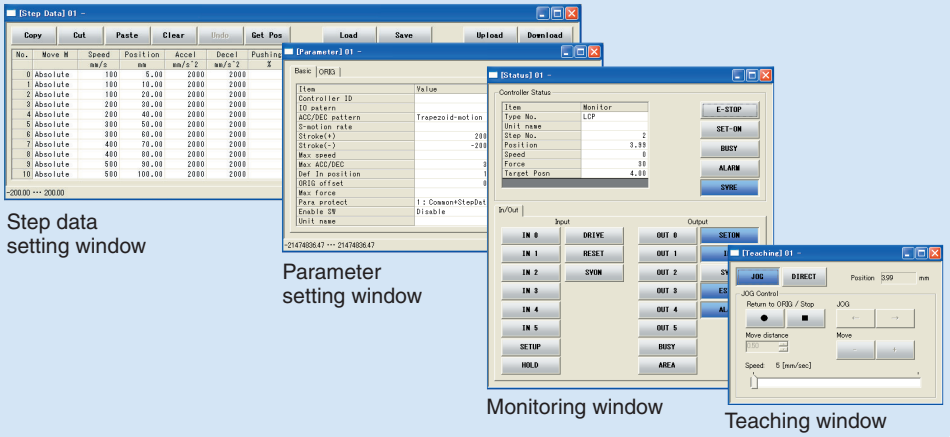

Step data setting window

Parameter setting window

Monitoring window

Teaching window

<When a TB (teaching box) is used>

- Multiple step data can be stored in the teaching box and transferred to the controller.
- Continuous test drive by up to 5 step data

Teaching box screen

- Each function (step data setting, test drive, monitoring, etc.) can be selected from the main menu.

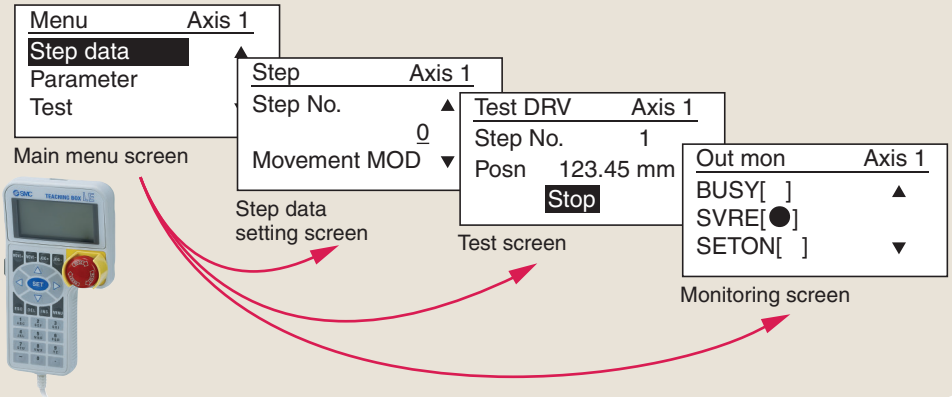

Main menu screen

Step data setting screen

Test screen

Monitoring screen

The actuator and controller are provided as a set. (They can be ordered separately as well.)

Confirm that the combination of the controller and actuator is correct.

<Check the following before use.>

① Check the actuator label for the model number. This number should match that of the controller.

② Check that the Parallel I/O configuration matches (NPN or PNP).

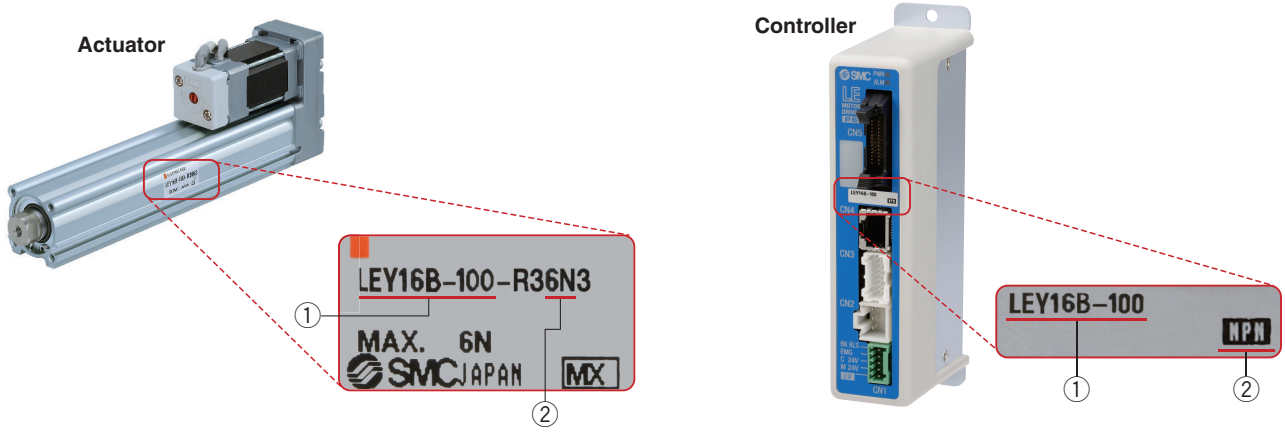

Fieldbus-compatible Gateway (GW) Unit

LEC-G Series ▶p. 203

◎ **Conversion unit for Fieldbus network and LEC serial communication**

Applicable Fieldbus protocols: CC-Link V2 DeviceNet PROFIBUS EtherNet/IP

◎ **Two methods of operation**

Step data input: Operate using preset step data in the controller.

Numerical data input: The actuator operates using values such as position and speed from the PLC.

◎ **Values such as position and speed can be checked on the PLC.**

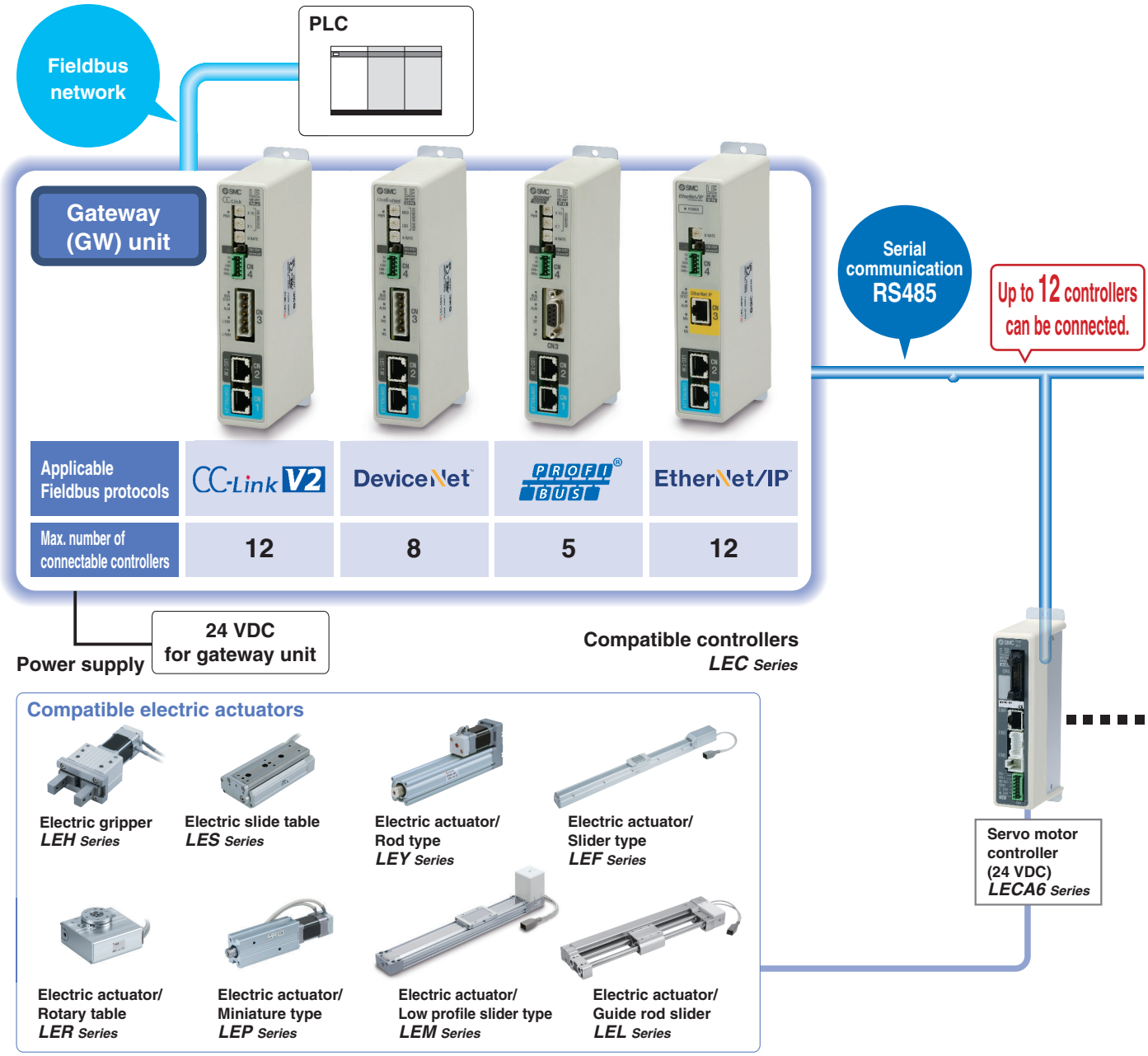

Programless Type *LECP1 Series* ▶p. 207

Step motor
(Servo/24 VDC)
LECP1

No programming required!

Allows for the setting up of electric actuator operation without using a PC or teaching box

1 Setting the position number → **2 Setting the stop position** → **3 Registration**

Set a registered number for the stop position.
Max. 14 points

Move the actuator to the desired stop position using the FORWARD and REVERSE buttons.

Register the stop position using the SET button.

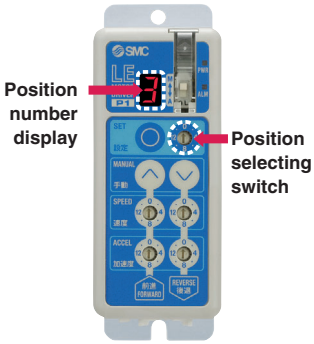

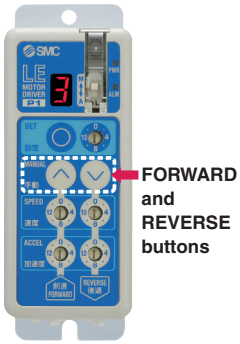

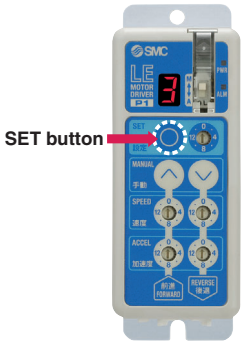

Speed/Acceleration 16-level adjustment

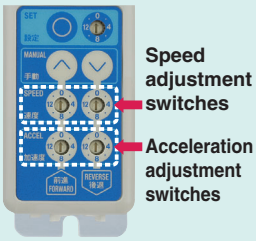

Pulse Input Type *LECPA Series* ▶p. 214

- **This driver uses pulse signals to allow positioning at any position. The actuator can be controlled from the customers' positioning unit.**

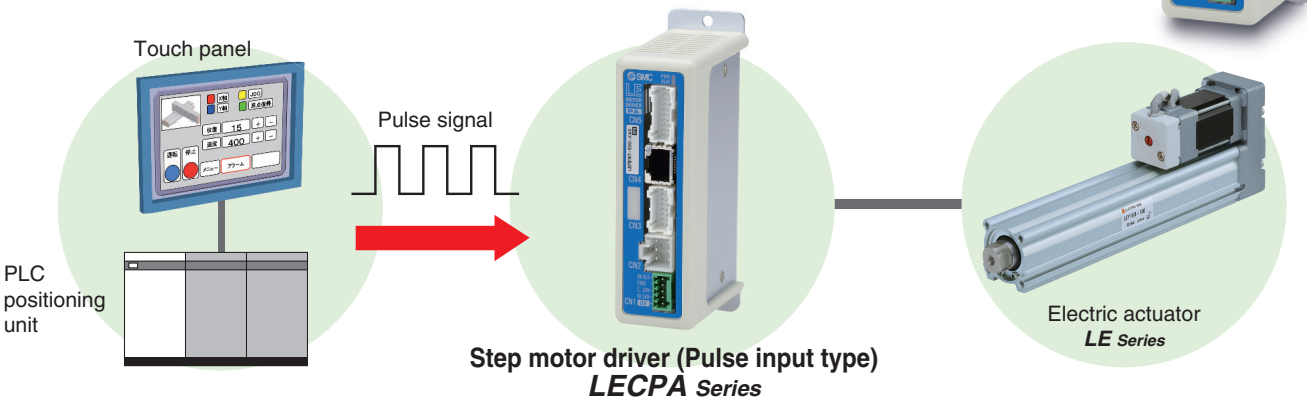

- **Return-to-origin command signal**
  Enables automatic return-to-origin action

- **With force limit function (Pushing force/Gripping force operation available)**
  Pushing force/Positioning operation is possible by switching signals.

Function

Item	Step data input type LECA6	Programless type LECP1	Pulse input type LECPA
Step data and parameter setting	• Input from controller setting software (PC) • Input from teaching box	• Selected using controller operation buttons	• Input from controller setting software (PC) • Input from teaching box
Step data "position" setting	• Numerical value input from controller setting software (PC) or teaching box • Input numerical value • Direct teaching • JOG teaching	• Direct teaching • JOG teaching	• No "Position" setting required Position and speed set by pulse signal
Number of step data	64 points	14 points	—
Operation command (I/O signal)	Step No. [IN*] input ⇒ [DRIVE] input	Step No. [IN*] input only	Pulse signal
Completion signal	[INP] output	[OUT*] output	[INP] output

Setting Items

TB: Teaching box PC: Controller setting software

Item		Contents	Easy Mode TB	Easy Mode PC	Normal Mode TB/PC	Programless type LECP1*1	Pulse input type LECPA
Step data setting (Excerpt)	Movement MOD	Selection of "absolute position" and "relative position"	△	●	●	Fixed value (ABS)	No setting required
	Speed	Transfer speed	●	●	●	Select from 16 levels	
	Position	[Position]: Target position [Pushing]: Pushing start position	●	●	●	Direct teaching JOG teaching	
	Acceleration/Deceleration	Acceleration/deceleration during movement	●	●	●	Select from 16 levels	
	Pushing force	Rate of force during pushing operation	●	●	●	Select from 3 levels (weak, medium, and strong)	Set in units of 1 %
	Trigger LV	Target force during pushing operation	△	●	●	No setting required (same value as pushing force)	Set in units of 1 %
	Pushing speed	Speed during pushing operation	△	●	●	No setting required	Set in units of 1 mm/s
	Moving force	Force during positioning operation	△	●	●		Set to (Different values for each actuator) %
	Area output	Conditions for area output signal to turn ON	△	●	●		Set in units of 0.01 mm
	In position	[Position]: Width to the target position [Pushing]: How much it moves during pushing	△	●	●		Set to (Different values for each actuator) or more (Units: 0.01 mm)
Parameter setting (Excerpt)	Stroke (+)	+ side position limit	×	×	●		Set in units of 0.01 mm
	Stroke (–)	– side position limit	×	×	●		Set in units of 0.01 mm
	ORIG direction	Direction of the return to origin can be set.	×	×	●	Compatible	Compatible
	ORIG speed	Speed during return to origin	×	×	●	No setting required	Set in units of 1 mm/s
	ORIG ACC	Acceleration during return to origin	×	×	●		Set in units of 1 mm/s²
Test	JOG		●	●	●	Hold down the MANUAL button (⏶⏷) for uniform sending (speed is a specified value).	Continuous operation at the set speed can be tested while the switch is being pressed.
	MOVE		×	●	●	Press the MANUAL button (⏶⏷) once for sizing operation (speed and sizing amount are specified values).	Operation at the set distance and speed from the current position can be tested.
	Return to ORIG		●	●	●	Compatible	Compatible
	Test drive	Operation of the specified step data	●	●	● (Continuous operation)	Compatible	Not compatible
	Forced output	ON/OFF of the output terminal can be tested.	×	×	●	Not compatible	Compatible
Monitor	DRV mon	Current position, speed, force, and the specified step data can be monitored.	●	●	●		Compatible
	In/Out mon	Current ON/OFF status of the input and output terminal can be monitored.	×	×	●		Compatible
ALM	Status	Alarm currently being generated can be confirmed.	●	●	●	Compatible (display alarm group)	Compatible
	ALM Log record	Alarms generated in the past can be confirmed.	×	×	●	Not compatible	Compatible
File	Save/Load	Step data and parameters can be saved, forwarded, and deleted.	×	×	●		Compatible
Other	Language	Can be changed to Japanese or English	●	●	●		Compatible

△: Can be set from TB Ver. 2.** (The version information is displayed on the initial screen.)

*1 The LECP1 programless type cannot be used with the teaching box and controller setting kit.

EtherCAT®/EtherNet/IP™/PROFINET/ DeviceNet™/IO-Link Direct Input Type Step Motor Controller/JXC□ Series ▶p. 224

IO-Link EtherCAT PROFINET DeviceNet EtherNet/IP

◎Two types of operation command

Step no. defined operation: Operate using the preset step data in the controller.
Numerical data defined operation: The actuator operates using values such as position and speed from the PLC.

◎Numerical monitoring available

Numerical information, such as the current speed, current position, and alarm codes, can be monitored on the PLC.

◎Transition wiring of communication cables

Two communication ports are provided.

* For the DeviceNet™ type, transition wiring is possible using a branch connector.
* 1 to 1 in the case of IO-Link

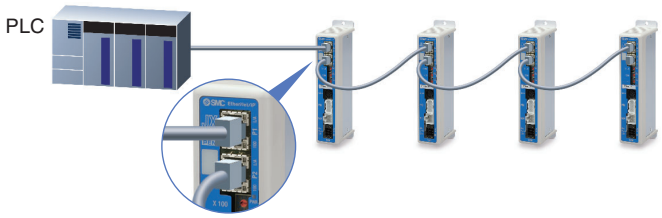

Application

Communication protocols: EtherCAT EtherNet/IP PROFINET DeviceNet IO-Link

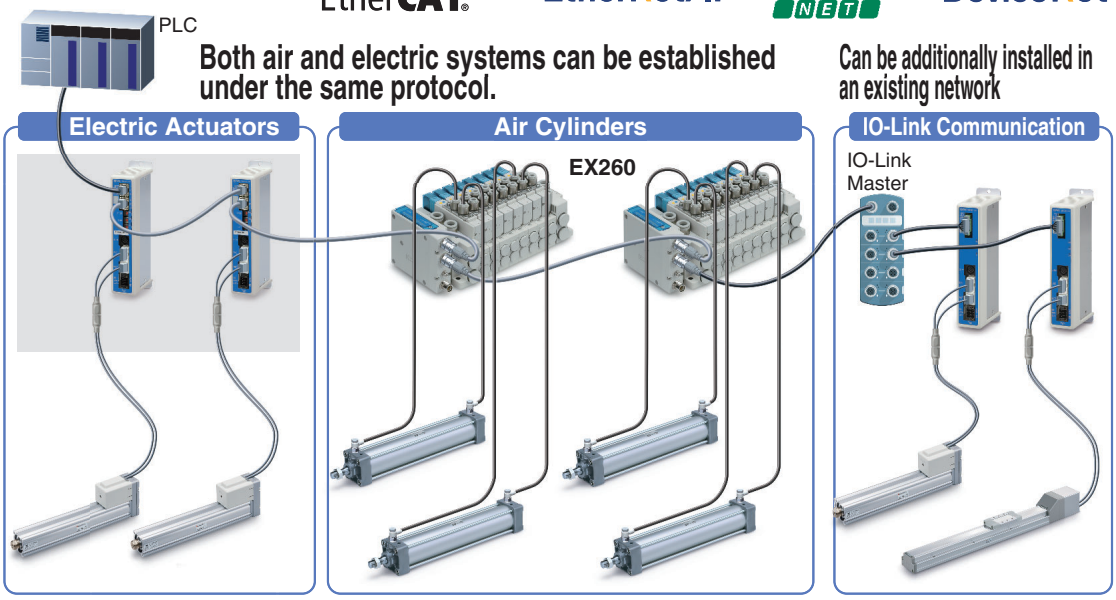

Multi-Axis Step Motor Controller

- **Speed tuning control**[*1]
  (3 Axes: JXC92 4 Axes: JXC73/83/93)
- **Linear/circular interpolation**

Linear interpolation

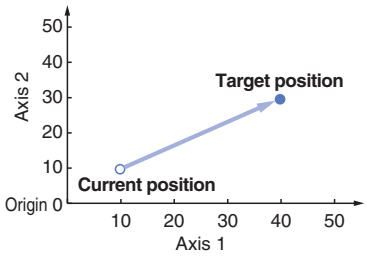

Circular interpolation

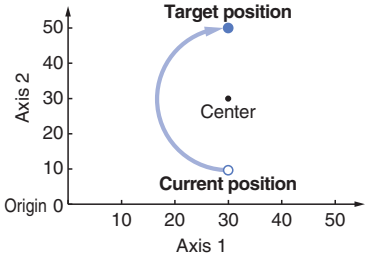

- **Positioning/pushing operation**
- **Step data input**
  (Max. 2048 points)
- **Space saving, reduced wiring**
- **Absolute/relative position coordinate instructions**

*1 This controls the speed of the following axis when the speed of the primary axis drops due to the effects of an external force and when a speed difference with the following axis occurs. This control is not for synchronizing the position of the primary axis and following axis.

For 3 Axes *JXC92 Series*

- **EtherNet/IP™ Type**
- **Width: Approx. 38 % reduction**

JXC92

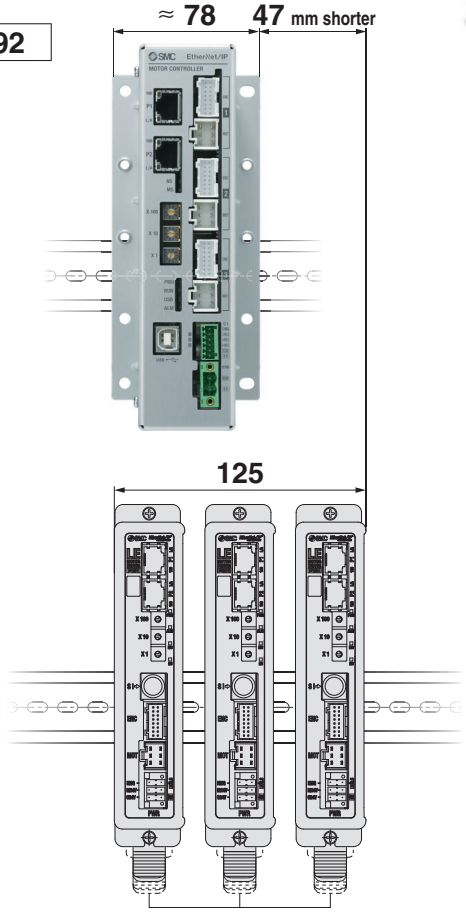

For 4 Axes *JXC73/83/93 Series*

- **Parallel I/O/**
  EtherNet/IP™ Type
- **Width: Approx. 18 % reduction**

JXC73/83

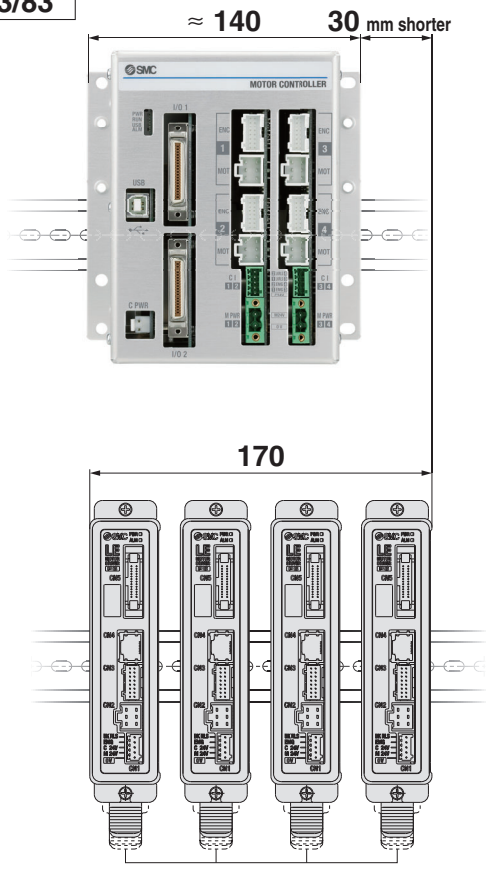

* For LE□, size 25 or larger

SMC

Step Data Input: Max. 2048 points

For 3 Axes

3-axis operation can be set collectively in one step.

Step	Axis	Movement mode	Speed	Position	Acceleration	Deceleration	Pushing force	Trigger LV	Pushing speed	Moving force	Area 1	Area 2	In position	Comments
			mm/s	mm	mm/s²	mm/s²					mm	mm	mm	
0	Axis 1	ABS	500	100.00	3000	3000	0	85.0	50	100.0	10.0	30.0	0.5	
	Axis 2	ABS	500	100.00	3000	3000	0	85.0	50	100.0	10.0	30.0	0.5	
	Axis 3	ABS	500	100.00	3000	3000	0	85.0	50	100.0	10.0	30.0	0.5	
1	Axis 1	INC	500	200.00	3000	3000	0	85.0	50	100.0	0	0	0.5	
	Axis 2	INC	500	200.00	3000	3000	0	85.0	50	100.0	0	0	0.5	
	Axis 3	INC	500	200.00	3000	3000	0	85.0	50	100.0	0	0	0.5	
⋮	⋮	⋮	⋮	⋮	⋮	⋮	⋮	⋮	⋮	⋮	⋮	⋮	⋮	
2046	Axis 1	SYN-I	500	100.00	3000	3000	0	0	0	100.0	0	0	0.5	
	Axis 2	SYN-I	0	0.00	0	0	0	0	0	100.0	0	0	0.5	
	Axis 3	SYN-I	0	0.00	0	0	0	0	0	100.0	0	0	0.5	
2047	Axis 1	CIR-R	500	0.00	3000	3000	0	0	0	100.0	0	0	0.5	
	Axis 2	CIR-R	0	50.00	0	0	0	0	0	100.0	0	0	0.5	
	Axis 3*1		0	0.00	0	0	0	0	0	100.0	0	0	0.5	
	Axis 4*1		0	25.00	0	0	0	0	0	100.0	0	0	0.5	

*1 When circular interpolation (CIR-R, CIR-L, CIR-3) is selected in the movement mode, input the X and Y coordinates in the rotation centre position or input the X and Y coordinates in the passing position.

Movement mode	Pushing operation	Details
Blank	×	Invalid data (Invalid process)
ABS	○	Moves to the absolute coordinate position based on the origin of the actuator
INC	○	Moves to the relative coordinate position based on the current position
LIN-A	×	Moves to the absolute coordinate position based on the origin of the actuator by linear interpolation
LIN-I	×	Moves to the relative coordinate position based on the current position by linear interpolation
CIR-R*2	×	With Axis 1 assigned to the X-axis and Axis 2 to the Y-axis, it moves in the clockwise direction by circular interpolation. The target position and rotation centre position are specified according to the relative coordinates from the current position. The position data is assigned as follows. Axis 1: Target position X Axis 2: Target position Y Axis 3*1: Rotation centre position X Axis 4*1: Rotation centre position Y
CIR-L*2	×	With Axis 1 assigned to the X-axis and Axis 2 to the Y-axis, it moves in the counter-clockwise direction by circular interpolation. The target position and rotation centre position are specified according to the relative coordinates from the current position. The position data is assigned as follows. Axis 1: Target position X Axis 2: Target position Y Axis 3*1: Rotation centre position X Axis 4*1: Rotation centre position Y
SYN-I	×	Moves to the relative coordinate position based on the current position by speed tuning control*3
CIR-3*2	×	With Axis 1 assigned to the X-axis and Axis 2 to the Y-axis, it moves based on the three specified points by circular interpolation. The target position and passing position are specified according to the relative coordinates from the current position. The position data is assigned as follows. Axis 1: Target position X Axis 2: Target position Y Axis 3*1: Passing position X Axis 4*1: Passing position Y

*2 Performs a circular operation on a plane using Axis 1 and Axis 2

*3 This controls the speed of the following axis when the speed of the primary axis drops due to the effects of an external force and when a speed difference with the following axis occurs. This control is not for synchronizing the position of the primary axis and following axis.

For 4 Axes

4-axis operation can be set collectively in one step.

Step	Axis	Movement mode	Speed	Position	Acceleration	Deceleration	Positioning/ Pushing	Area 1	Area 2	In position	Comments
			mm/s	mm	mm/s²	mm/s²		mm	mm	mm	
0	Axis 1	ABS	100	200.00	1000	1000	0	6.0	12.0	0.5	
	Axis 2	ABS	50	100.00	1000	1000	0	6.0	12.0	0.5	
	Axis 3	ABS	50	100.00	1000	1000	0	6.0	12.0	0.5	
	Axis 4	ABS	50	100.00	1000	1000	0	6.0	12.0	0.5	
1	Axis 1	INC	500	250.00	1000	1000	1	0	0	20.0	
	Axis 2	INC	500	250.00	1000	1000	1	0	0	20.0	
	Axis 3	INC	500	250.00	1000	1000	1	0	0	20.0	
	Axis 4	INC	500	250.00	1000	1000	1	0	0	20.0	
⋮	⋮	⋮	⋮	⋮	⋮	⋮	⋮	⋮	⋮	⋮	⋮
2046	Axis 4	ABS	200	700	500	500	0	0	0	0.5	
2047	Axis 1	ABS	500	0.00	3000	3000	0	0	0	0.5	
	Axis 2	ABS	500	0.00	3000	3000	0	0	0	0.5	
	Axis 3	ABS	500	0.00	3000	3000	0	0	0	0.5	
	Axis 4	ABS	500	0.00	3000	3000	0	0	0	0.5	

Movement mode	Pushing operation	Details
Blank	×	Invalid data (Invalid process)
ABS	○	Moves to the absolute coordinate position based on the origin of the actuator
INC	○	Moves to the relative coordinate position based on the current position
LIN-A	×	Moves to the absolute coordinate position based on the origin of the actuator by linear interpolation
LIN-I	×	Moves to the relative coordinate position based on the current position by linear interpolation
CIR-R*1	×	With Axis 1 assigned to the X-axis and Axis 2 to the Y-axis, it moves in the clockwise direction by circular interpolation. The target position and rotation centre position are specified according to the relative coordinates from the current position. The position data is assigned as follows. Axis 1: Target position X Axis 2: Target position Y Axis 3: Rotation centre position X Axis 4: Rotation centre position Y
CIR-L*1	×	With Axis 1 assigned to the X-axis and Axis 2 to the Y-axis, it moves in the counter-clockwise direction by circular interpolation. The target position and rotation centre position are specified according to the relative coordinates from the current position. The position data is assigned as follows. Axis 1: Target position X Axis 2: Target position Y Axis 3: Rotation centre position X Axis 4: Rotation centre position Y
SYN-I	×	Moves to the relative coordinate position based on the current position by speed tuning control*2

*1 Performs a circular operation on a plane using Axis 1 and Axis 2

*2 This controls the speed of the following axis when the speed of the primary axis drops due to the effects of an external force and when a speed difference with the following axis occurs. This control is not for synchronizing the position of the primary axis and following axis.

● Controller Setting Software (Connection with a PC)

For 3 Axes	For 4 Axes
JXC92	JXC73/83/93

Easy file management

Load	The step data is loaded from the file.
Save	The step data is saved in a file.
Upload	The step data is loaded from the controller.
Download	The step data is written in the controller.

Abundant edit functions

Copy	The selected step data is copied to the clipboard.
Delete	The selected step data is deleted.
Cut	The selected step data is cut.
Paste (Insert)	The step data copied to the clipboard is inserted into the cursor's position.
Paste (Overwrite)	The step data copied to the clipboard overwrites the data at the cursor position.
Insert	A blank line is inserted in the selected step data line.

Operation confirmation of entered step data

0	Enter the step number to be executed.
▶	Executes the specified step number.
Stop	Displays whether the step number is being executed or stopped.
All axes return to origin	Performs a return to origin of all the valid axes.

Step data window

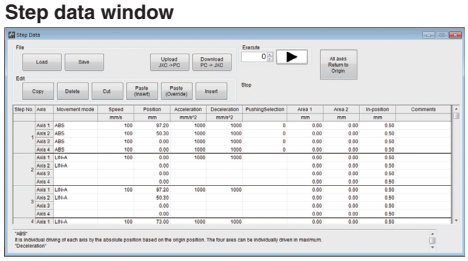

System Construction/General Purpose I/O

● Electric actuator/ Rod type

Provided by the customer

PLC

Power supply for I/O signal 24 VDC*1

● I/O cable p. 199, 213

Controller type	Part no.
LECA6	LEC-CN5-□
LECP1 (Programless)	LEC-CK4-□

Programless type
LECP1
p. 207

* The teaching box, controller setting kit, and Touch Operator Interface/Human-Machine Interface cannot be connected.

● Controller*2

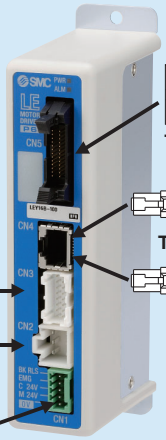

To CN5

To CN4

To CN3

To CN2

To CN1

Provided by the customer

Power supply for controller 24 VDC*1

*1 When compliance with UL is required, the electric actuator and controller should be used with a UL1310 Class 2 power supply.

Step data input type
LECA6
p. 191

● Power supply plug (Accessory)
<Applicable cable size>
AWG20 (0.5 mm²)

● Touch Operator Interface/Human-Machine Interface (Provided by the customer)

GP4501T/GP3500T
Schneider Electric Japan Holdings Ltd.

Pro-face for the best interface

Cockpit parts can be downloaded for free via the Pro-face web-site.
By using the cockpit parts, adjustments can be made from the Touch Operator Interface.

GOT2000 Series
Mitsubishi Electric Corporation

GOT2000 Graphic Operation Terminal

Sample screens for monitoring and changing the current value and set value of the electric actuator can be downloaded for free via the Mitsubishi Electric website.

● Actuator cable*2 p. 197, 212

Controller type	Standard cable	Robotic cable
LECA6 (Step data input type)	—	LE-CA-□
LECP1 (Programless type)	LE-CP-□-S	LE-CP-□

*2 Can be included as an option. Refer to the "How to Order" page of the actuator.

Options

● Teaching box p. 201
(With 3 m cable)
LEC-T1-3JG□

or

● Communication cable for controller setting p. 200
Communication cable: LEC-W2A-C
USB cable: LEC-W2-U
Controller setting software
USB driver
* Download from SMC's website:
https://www.smc.eu

Communication cable ● (3 m)

● USB cable

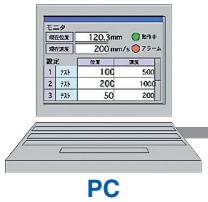

PC

* Cannot be used with the programless type (LECP1)

System Construction/Fieldbus Network

PLC
(Provided by the customer)

Power supply for gateway unit
24 VDC*1

Power supply

Fieldbus network

Gateway (GW) unit p. 203

Applicable Fieldbus protocols
CC-Link Ver. 2.0
DeviceNet™
PROFIBUS DP
EtherNet/IP™

● Power supply connector
(Accessory)
To CN4

● Communication connector
(Accessory)*2
To CN3

*2 CC-Link Ver. 2.0
DeviceNet™

To CN2

To CN1

● Communication cable p. 203
LEC-CG1-□

Options

● Communication cable p. 200 for controller setting
Communication cable: LEC-W2A-C
USB cable: LEC-W2-U

Controller setting software
USB driver
* Download from SMC's website:
https://www.smc.eu

● Communication cable
USB cable ●
PC
(Provided by the customer)

or

● Teaching box p. 200
(With 3 m cable)
LEC-T1-3JG□

● Cable between branches p. 203
LEC-CG2-□

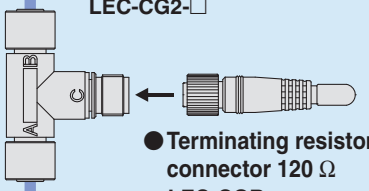

● Terminating resistor connector 120 Ω
LEC-CGR

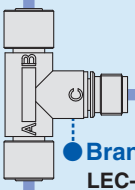

● Branch connector p. 203
LEC-CGD

● Communication cable p. 203
LEC-CG1-□

● Controller p. 191

To CN4

● Power supply connector
(Accessory)

To CN1

Controller input power supply*1

● Controller p. 191

● Power supply connector
(Accessory)

To CN1

Controller input power supply*1

Applicable Fieldbus protocols	Max. number of connectable controllers
CC-Link Ver. 2.0	12
DeviceNet™	8
PROFIBUS DP	5
EtherNet/IP™	12

Compatible Controllers

Servo motor controller (24 VDC)	**LECA6** Series

*1 Connect the 0 V terminals for both the controller input power supply and the gateway unit power supply.
When compliance with UL is required, the electric actuator and controller should be used with a UL1310 Class 2 power supply.

● Electric actuator/
Rod type

System Construction/Pulse Signal

● Electric actuator/
Rod type

● Current limiting resistor p. 220
LEC-PA-R-□

＊ The current limiting resistor is used when the pulse signal output of the positioning unit is open collector output. For details, refer to page 215.

Provided by the customer

PLC

Power supply for I/O signal
24 VDC＊1

＊1 When compliance with UL is required, the electric actuator and driver should be used with a UL1310 Class 2 power supply.

● Driver＊2

● I/O cable p. 220

Driver type	Part no.
LECPA	LEC-CL5-□

To CN5

To CN4

To CN3

To CN2

To CN1

Pulse input type
LECPA
p. 214

Provided by the customer

Power supply for driver
24 VDC＊1

● Power supply plug (Accessory)
<Applicable cable size>
AWG20 (0.5 mm²)

＊1 When compliance with UL is required, the electric actuator and driver should be used with a UL1310 Class 2 power supply.

● Actuator cable＊2 p. 219

Driver type	Standard cable	Robotic cable
LECPA (Pulse input type)	LE-CP-□-S	LE-CP-□

＊2 Can be included as an option. Refer to the "How to Order" page of the actuator.

Options

● Teaching box p. 222
(With 3 m cable)
LEC-T1-3JG□

or

● Communication cable for controller setting p. 221
Communication cable: LEC-W2A-C
USB cable: LEC-W2-U

Controller setting software
USB driver
＊ Download from SMC's website:
https://www.smcworld.com

Communication cable

● USB cable

PC

System Construction/Fieldbus Network
(EtherCAT®/EtherNet/IP™/PROFINET/DeviceNet™/IO-Link Direct Input Type)

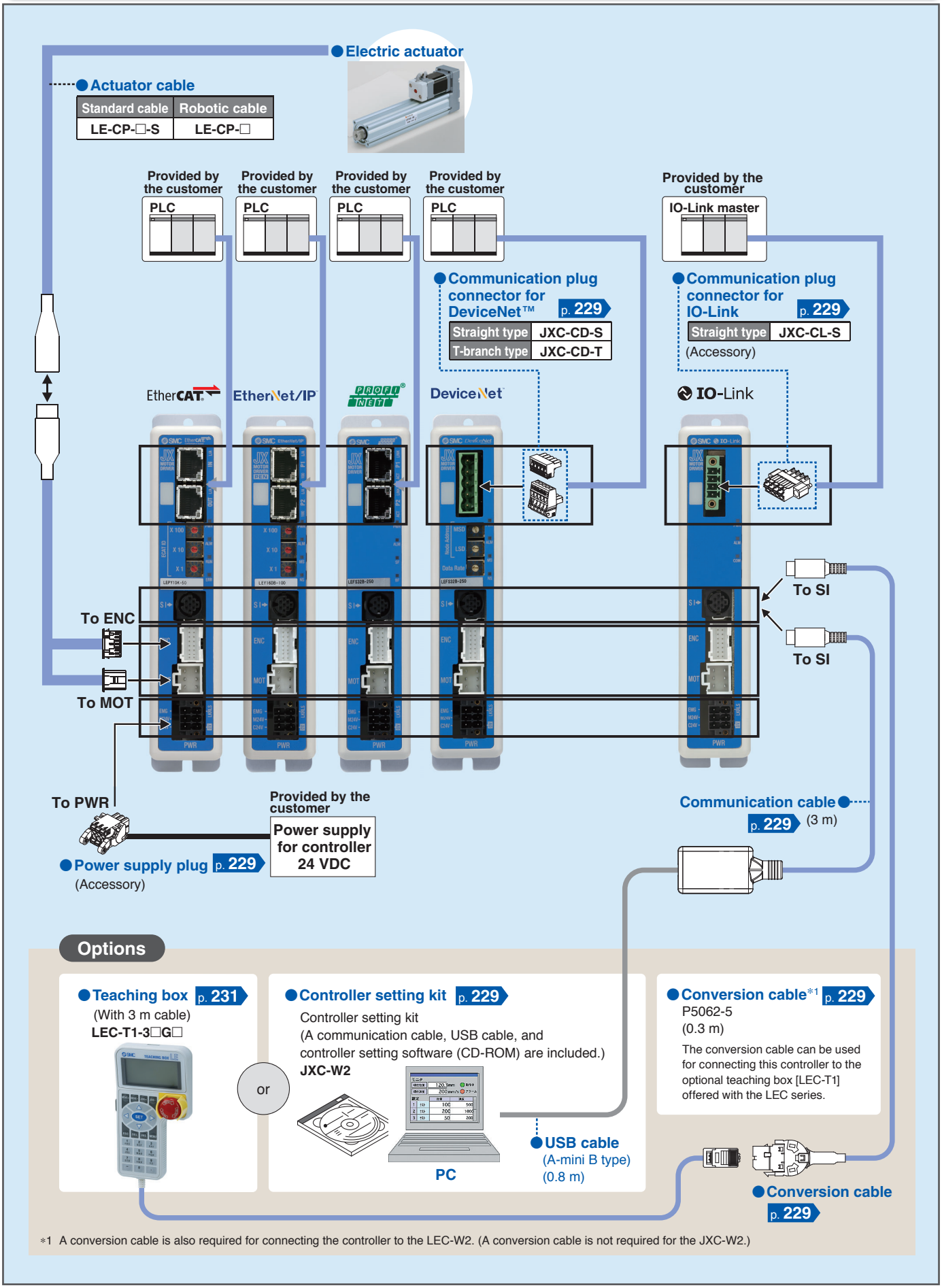

Options

Teaching box p. 231
(With 3 m cable)
LEC-T1-3□G□

or

Controller setting kit p. 229
Controller setting kit
(A communication cable, USB cable, and controller setting software (CD-ROM) are included.)
JXC-W2

PC

USB cable
(A-mini B type)
(0.8 m)

Conversion cable[*1] p. 229
P5062-5
(0.3 m)
The conversion cable can be used for connecting this controller to the optional teaching box [LEC-T1] offered with the LEC series.

Conversion cable
p. 229

*1 A conversion cable is also required for connecting the controller to the LEC-W2. (A conversion cable is not required for the JXC-W2.)

System Construction/EtherNet/IP™ Type (JXC92)

Provided by the customer

PLC

●Provided by the customer
Ethernet cable
(With shield, Category 5 or higher)

Provided by the customer
The connected actuators should be ordered separately.

●Electric actuator

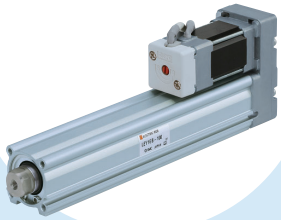

●**Controller**/JXC92

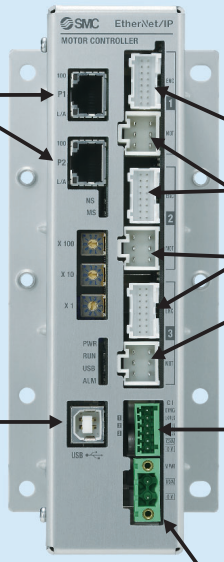

To P1 or P2

To ENC

To MOT

●Actuator cable p. 244

Robotic cable	Standard cable
LE-CP-□-□	LE-CP-□-□-S

To USB

To CI

●Control power supply connector p. 239
(Accessory)
<Applicable cable size>
AWG20 (0.5 mm²)

Provided by the customer

Control power supply/
Motor power supply
24 VDC

To M PWR

●Motor power supply connector p. 239
(Accessory)
<Applicable cable size>
AWG16 (1.25 mm²)

●Controller setting kit p. 243
(Controller setting software and USB cable are included.)
(Option)
JXC-MA1

●USB cable p. 243
(Option)
JXC-MA1-2
Cable length: 3 m

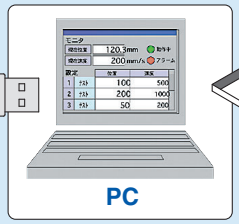

PC

Provided by the customer

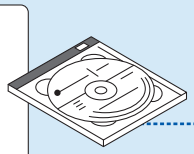

●Controller setting software p. 243
(Option)
JXC-MA1-1

System Construction/Parallel I/O (JXC73/83)

Provided by the customer

PLC

Power supply for I/O signal 24 VDC

● I/O cable p. 242
(Option)

Part no.
JXC-C2-□

Provided by the customer
The connected actuators should be ordered separately.

● Electric actuator

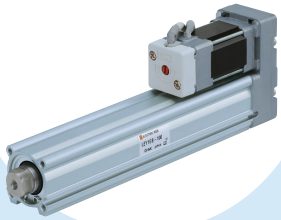

● Controller/JXC73/83

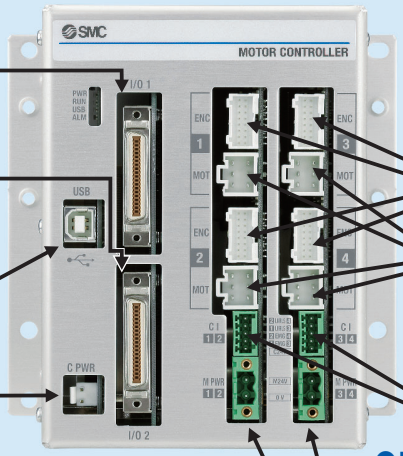

To I/O

To USB

To C PWR

To ENC

To MOT

To CI

● Actuator cable p. 244

Robotic cable	Standard cable
LE-CP-□	LE-CP-□-S

● Motor control power supply connector p. 239
(Accessory)
<Applicable cable size>
AWG20 (0.5 mm²)

● Cable with main control power supply connector p. 242
Cable length: 1.5 m (Accessory)

Part no.
JXC-C1

Provided by the customer

Motor control power supply/ Motor power supply 24 VDC

To M PWR

Provided by the customer

Main control power supply 24 VDC

● Motor power supply connector p. 239
(Accessory)
<Applicable cable size>
AWG16 (1.25 mm²)

● Controller setting kit p. 243
(Controller setting software and USB cable are included.)
(Option)
JXC-W1

● USB cable p. 243
(Option)
JXC-W1-2
Cable length: 3 m

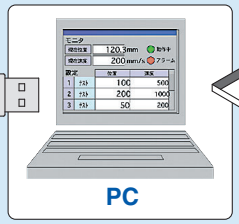

PC

Provided by the customer

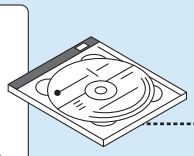

● Controller setting software p. 243
(Option)
JXC-W1-1

System Construction/EtherNet/IP™ Type (JXC93)

Provided by the customer

PLC

Provided by the customer
Ethernet cable
(Category 5 or higher)

Provided by the customer
The connected actuators should be ordered separately.

● Electric actuator

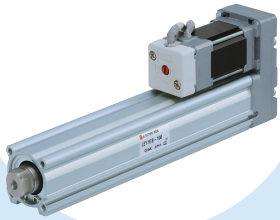

● Controller/JXC93

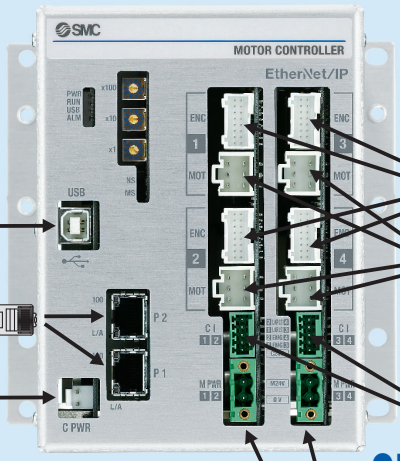

● Actuator cable p. 244

Robotic cable	Standard cable
LE-CP-□	LE-CP-□-S

● Cable with main control power supply connector p. 242
Cable length: 1.5 m (Accessory)

Part no.
JXC-C1

Provided by the customer
Main control power supply 24 VDC

● Motor control power supply connector p. 239
(Accessory)
<Applicable cable size>
AWG20 (0.5 mm²)

Provided by the customer
Motor control power supply/ Motor power supply 24 VDC

To M PWR

● Motor power supply connector p. 239
(Accessory)
<Applicable cable size>
AWG16 (1.25 mm²)

● Controller setting kit p. 243
(Controller setting software and USB cable are included.)
(Option)
JXC-W1

● USB cable p. 243
(Option)
JXC-W1-2
Cable length: 3 m

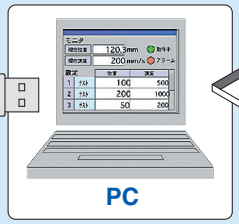

Provided by the customer

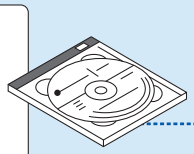

● Controller setting software p. 243
(Option)
JXC-W1-1

AC Servo Motor Driver

LECS□/LECSS-T/LECY□ Series List

Series		Compatible motor			Control method			Application/ Function	Compatible option
		100 W	200 W	400 W	*1 Positioning	Pulse	Network direct input	*2 Synchronous	Setup software
Incremental Type	**LECSA** (Pulse input type/ Positioning type)	●	●	●	Up to 7 points ●	●			LEC-MRC2 ●
Absolute Type	**LECSB** (Pulse input type)	●	●	●		●			LEC-MRC2 ●
	CC-Link **LECSC** (CC-Link direct input type)	●	●	●	Up to 255 points ●		CC-Link Ver. 1.10 ●		LEC-MRC2 ●
	SSCNET III **LECSS** (SSCNET Ⅲ type) Compatible with Mitsubishi Electric's servo system controller network	●	●	●			SSCNET Ⅲ ●	*2 ●	LEC-MRC2 ●
	SSCNET III/H **LECSS-T** (SSCNET Ⅲ/H type) Compatible with Mitsubishi Electric's servo system controller network	●	●	●			SSCNET Ⅲ/H ●	*2 ●	LEC-MRC2 ●
	MECHATROLINK-Ⅱ **LECYM**	●	●	●			MECHATRO LINK-Ⅱ ●	*3 ●	SigmaWin+™ ●
	MECHATROLINK-Ⅲ **LECYU**	●	●	●			MECHATRO LINK-Ⅲ ●	*3 ●	SigmaWin+™ ●

∗1 For positioning types, the settings need to be changed in order to use the max. set values. Setup software (MR Configurator2™) LEC-MRC2 is required.
∗2 Available when a Mitsubishi motion controller is used as the master
∗3 Available when a motion controller is used as the master
∗ For customer-provided PLC and motion controller setting and usage instructions, confirm with the retailer or manufacturer.

Gain adjustment using auto tuning

Auto-tuning function

- Controls the difference between the command value and the actual action

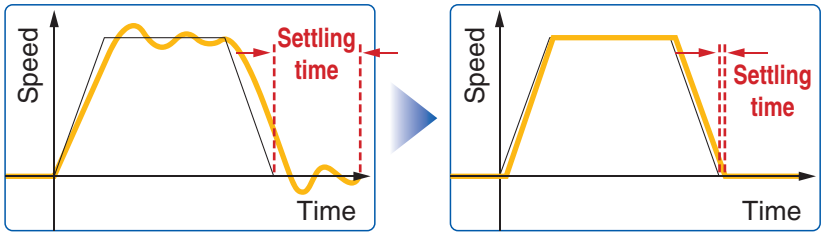

Vibration suppression control function

- Automatically suppresses low-frequency machine vibrations (1 to 100 Hz)

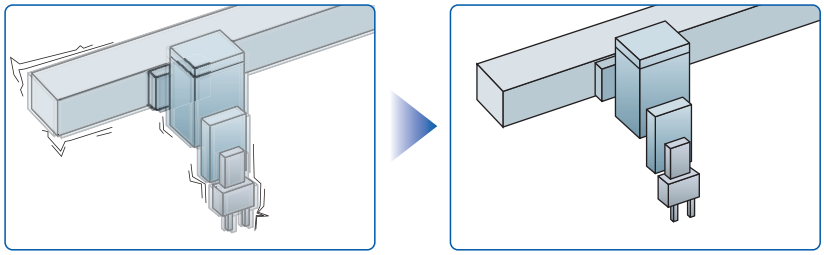

AC Servo Motor Driver

With display setting function

One-touch adjustment button
One-touch servo adjustment

Display
Display the monitor, parameters, and alarm.

Settings
Set the parameters, monitor display, etc., with push buttons.

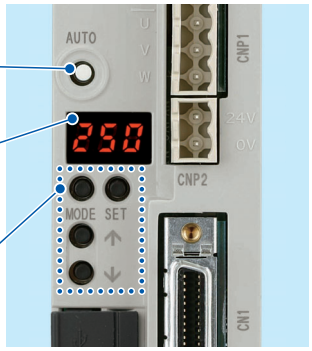

LECSA

Display
Display the monitor, parameters, and alarm.

Settings
Set the parameters, monitor display, etc., with push buttons.

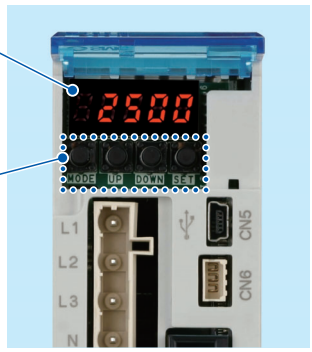

(With the front cover opened)

LECSB

Display
Display the communication status with the driver, the alarm, and the point table no.

Settings
Control the Baud rate, station number, and the occupied station count.

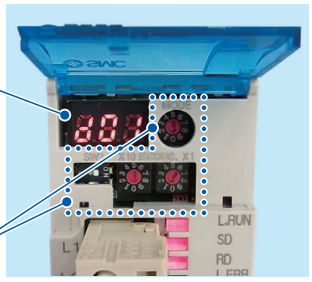

(With the front cover opened)

LECSC

Display
Display the communication status with the driver and the alarm.

Settings
Switches for selecting the axis and switching to the test operation

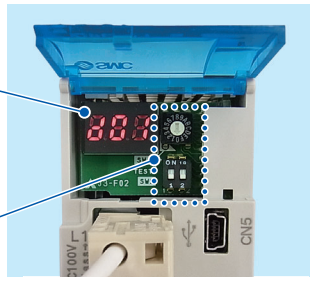

(With the front cover opened)

LECSS

Display
Display the communication status with the driver and the alarm.

Settings
Switches for axis setting, control axis deactivation, switching to the test operation, etc.

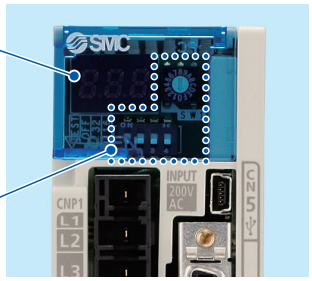

LECSS2-T

Settings
Switches for station address, communication speed, number of transmission bytes, etc.

Display
Display the driver status and alarm.

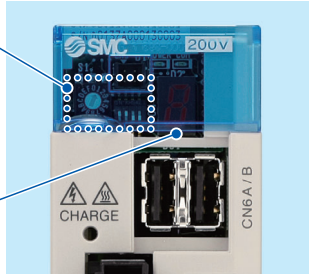

LECYM

Settings
Switches for station address, number of transmission bytes, etc.

Display
Display the driver status and alarm.

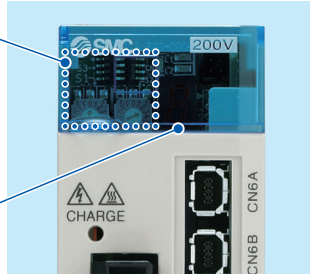

LECYU

System Construction

Incremental encoder compatible *LECSA Series*
(Pulse input type/Positioning type)

Provided by the customer

Power supply
Single phase 100 to 120 VAC (50/60 Hz)
200 to 230 VAC (50/60 Hz)

◎Option
Regeneration option p. 266
Part no.: **LEC-MR-RB-□**

Main circuit power supply connector p. 256
(Accessory)

Driver

Motor cable p. 264

Standard cable	Robotic cable
LE-CSM-S□□	LE-CSM-R□□

Lock cable p. 264

Standard cable	Robotic cable
LE-CSB-S□□	LE-CSB-R□□

Provided by the customer

Power supply for lock
24 VDC

Electric actuator
Rod type
LEY Series
Guide rod type
LEYG Series

Encoder cable p. 264

Standard cable	Robotic cable
LE-CSE-S□□	LE-CSE-R□□

Provided by the customer

Control circuit power supply
24 VDC

Control circuit power supply connector p. 256
(Accessory)

◎Option

Setup software p. 267
(MR Configurator2™)
Part no.: **LEC-MRC2□**

PC

USB cable p. 268
Part no.: **LEC-MR-J3USB**

◎Option p. 264
I/O connector
Part no.: **LE-CSNA**
or
I/O cable p. 265
Part no.: **LEC-CSNA-1**

Provided by the customer

PLC (Positioning unit)
Power supply for I/O signal 24 VDC

Absolute encoder compatible *LECSB Series*
(Pulse input type)

Provided by the customer

Power supply
Single phase 100 to 120 VAC (50/60 Hz)
200 to 230 VAC (50/60 Hz)
Three phase 200 to 230 VAC (50/60 Hz)

◎Option
Regeneration option p. 266
Part no.: **LEC-MR-RB-□**

Main circuit power supply connector p. 257
(Accessory)

Driver

Motor cable p. 264

Standard cable	Robotic cable
LE-CSM-S□□	LE-CSM-R□□

Lock cable p. 264

Standard cable	Robotic cable
LE-CSB-S□□	LE-CSB-R□□

Control circuit power supply connector p. 257
(Accessory)

Motor connector p. 257
(Accessory)

Provided by the customer

Power supply for lock
24 VDC

Electric actuator
Rod type
LEY Series
Guide rod type
LEYG Series

Encoder cable p. 264

Standard cable	Robotic cable
LE-CSE-S□□	LE-CSE-R□□

USB cable p. 268
Part no.: **LEC-MR-J3USB**

◎Option

Setup software p. 267
(MR Configurator2™)
Part no.: **LEC-MRC2□**

PC

Analog monitor output

RS-422 communication

◎Option p. 264
I/O connector
Part no.: **LE-CSNB**
or
I/O cable p. 265
Part no.: **LEC-CSNB-1**

Provided by the customer

PLC (Positioning unit)
Power supply for I/O signal 24 VDC

p. 268
Battery (Accessory)
Part no.: **(LEC-MR-J3BAT)**

System Construction

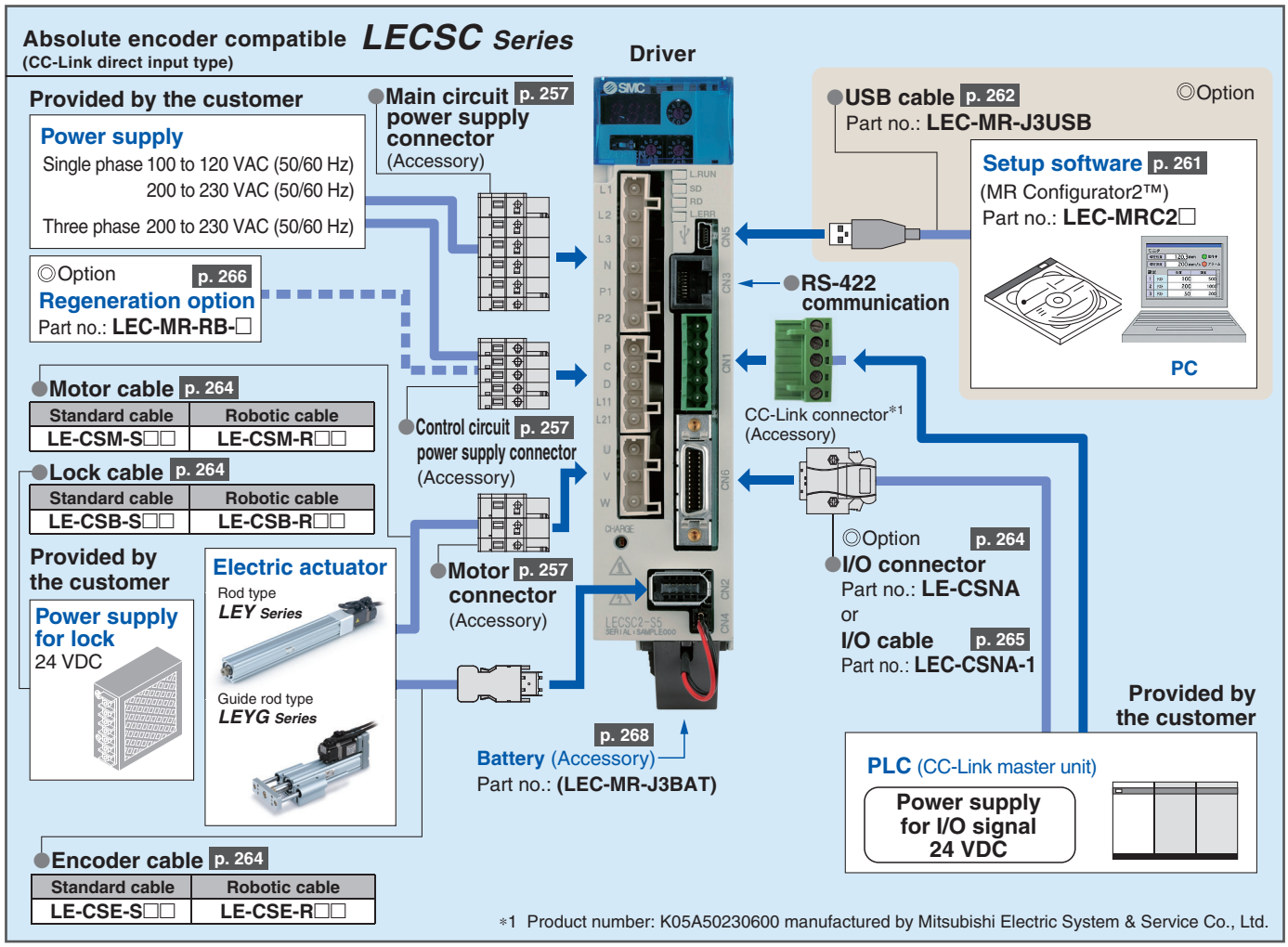

*1 Product number: K05A50230600 manufactured by Mitsubishi Electric System & Service Co., Ltd.

System Construction

Absolute encoder compatible *LECSS Series*
(SSCNET Ⅲ type)

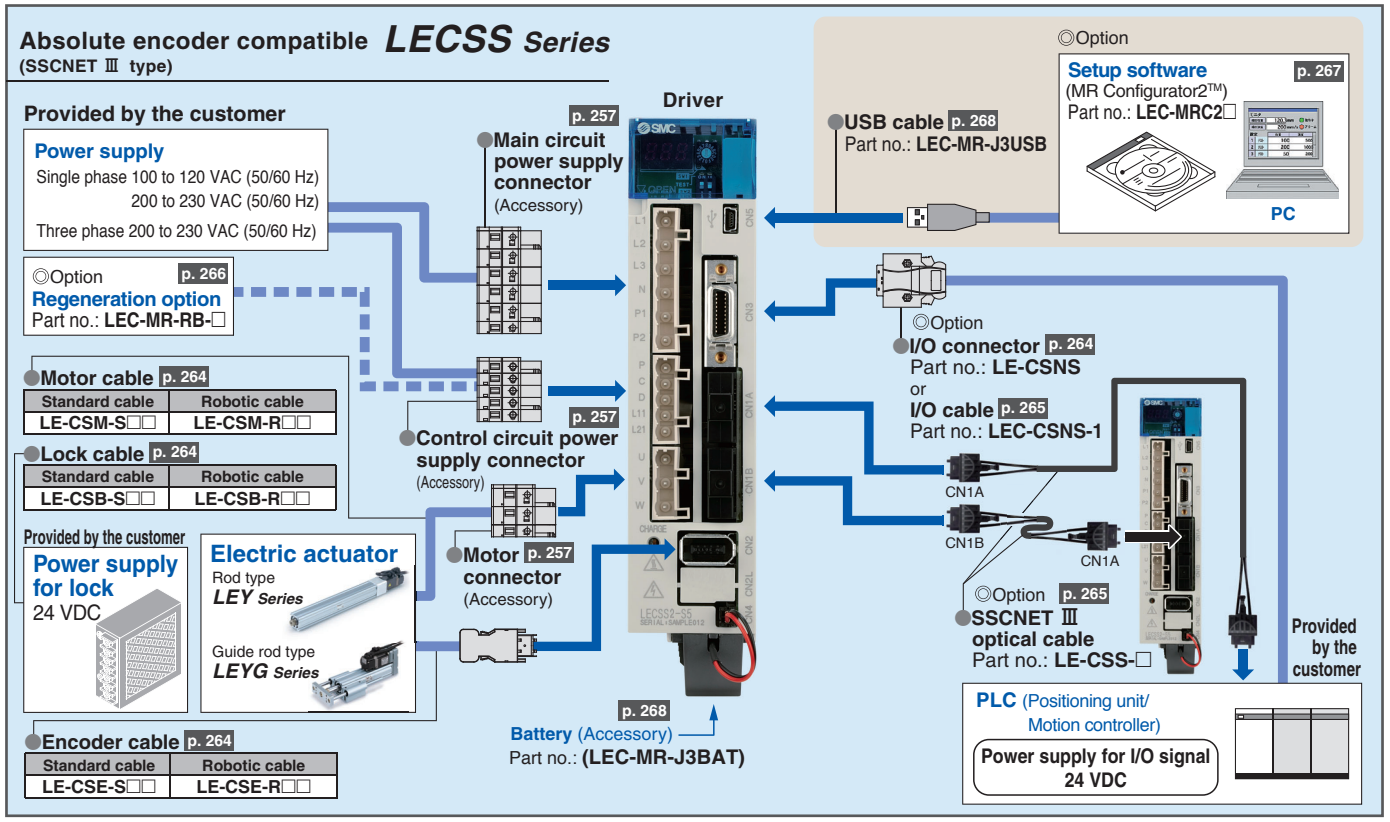

Absolute encoder compatible *LECSS-T Series*
SSCNET Ⅲ/H
SERVO SYSTEM CONTROLLER NETWORK

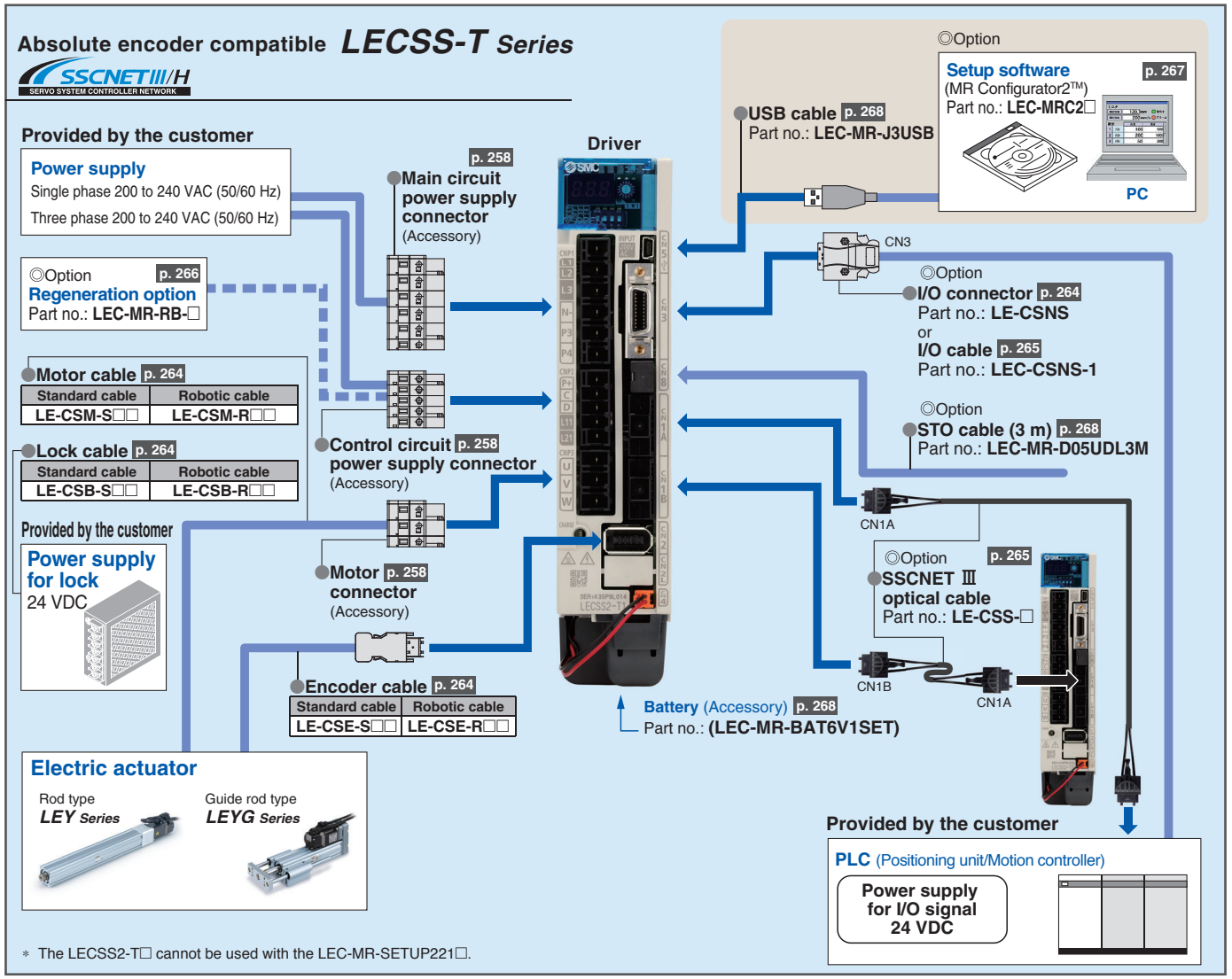

* The LECSS2-T□ cannot be used with the LEC-MR-SETUP221□.

System Construction

Absolute encoder compatible *LECYM* Series

MECHATROLINK-Ⅱ type

Provided by the customer

Power supply
Single phase 200 to 230 VAC (50/60 Hz)
Three phase 200 to 230 VAC (50/60 Hz)

Provided by the customer

External regenerative resistor p. 274

∗ If an external regenerative resistor is required, it should be provided by the customer. For external regenerative resistor selection, refer to the compatible actuator catalog.

Main circuit power supply connector (Accessory) p. 274

Motor cable p. 277

Standard cable	Robotic cable
LE-CYM-S□A-□	LE-CYM-R□A-□

Motor cable for lock option p. 277

Standard cable	Robotic cable
LE-CYB-S□A-□	LE-CYB-R□A-□

Provided by the customer

Power supply for lock
24 VDC

Electric actuator
Rod type
***LEY* Series**
Guide rod type
***LEYG* Series**

Motor connector (Accessory) p. 274

Encoder cable p. 277

Standard cable	Robotic cable
LE-CYE-S□A	LE-CYE-R□A

Driver

2nd driver

Provided by the customer

PLC (Positioning unit/Motion controller)
Power supply for I/O signal 24 VDC

◎Option

USB cable p. 280
Part no.: **LEC-JZ-CVUSB**

Setup software p. 280
(SigmaWin+™)
Please download it via our website.

PC

∗ Order the USB cable (Part no.: **LEC-JZ-CVUSB**) separately to use this software.

◎Option
I/O connector p. 278
Part no.: **LE-CYNA**
or
I/O cable p. 278
Part no.: **LEC-CSNA-1**

Cable for safety function device (3 m) p. 280
Part no.: **LEC-JZ-CVSAF**

Absolute encoder compatible *LECYU* Series

MECHATROLINK-Ⅲ type

Provided by the customer

Power supply
Single phase 200 to 230 VAC (50/60 Hz)
Three phase 200 to 230 VAC (50/60 Hz)

Provided by the customer

External regenerative resistor p. 274

∗ If an external regenerative resistor is required, it should be provided by the customer. For external regenerative resistor selection, refer to the compatible actuator catalog.

Main circuit power supply connector (Accessory) p. 274

Motor cable p. 277

Standard cable	Robotic cable
LE-CYM-S□A-□	LE-CYM-R□A-□

Motor cable for lock option p. 277

Standard cable	Robotic cable
LE-CYB-S□A-□	LE-CYB-R□A-□

Provided by the customer

Power supply for lock
24 VDC

Electric actuator
Rod type
***LEY* Series**
Guide rod type
***LEYG* Series**

Motor connector (Accessory) p. 274

Encoder cable p. 277

Standard cable	Robotic cable
LE-CYE-S□A	LE-CYE-R□A

Driver

2nd driver

Provided by the customer

PLC (Positioning unit/Motion controller)
Power supply for I/O signal 24 VDC

◎Option

USB cable p. 280
Part no.: **LEC-JZ-CVUSB**

Setup software p. 280
(SigmaWin+™)
Please download it via our website.

PC

∗ Order the USB cable (Part no.: **LEC-JZ-CVUSB**) separately to use this software.

◎Option
I/O connector p. 278
Part no.: **LE-CYNA**
or
I/O cable p. 278
Part no.: **LEC-CSNA-1**

Cable for safety function device (3 m) p. 280
Part no.: **LEC-JZ-CVSAF**

SMC Electric Actuator

Slider Type
Step Motor (Servo/24 VDC) | Servo Motor (24 VDC) | AC Servo Motor

Ball screw drive
***LEFS* Series**

Clean room compatible

LEFS Series

Size	Max. work load [kg]	Stroke [mm]
16	15	Up to 500
25	30	Up to 800
32	50	Up to 1000
40	65	Up to 1200

Belt drive
***LEFB* Series**

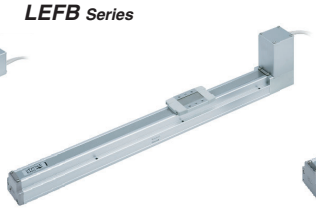

LEFB Series

Size	Max. work load [kg]	Stroke [mm]
16	1	Up to 1000
25	10	Up to 2000
32	19	Up to 2000

Ball screw drive
***LEFS* Series**

Clean room compatible

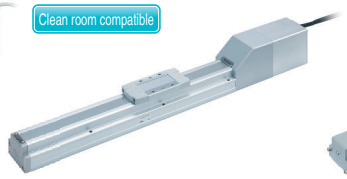

LEFS Series

Size	Max. work load [kg]	Stroke [mm]
25	20	Up to 800
32	45	Up to 1000
40	60	Up to 1200

Belt drive
***LEFB* Series**

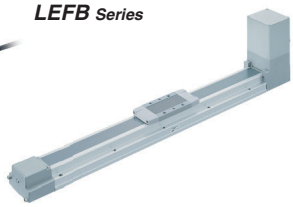

LEFB Series

Size	Max. work load [kg]	Stroke [mm]
25	5	Up to 2000
32	15	Up to 2500
40	25	Up to 3000

High Rigidity Slider Type
AC Servo Motor

Ball screw drive
***LEJS* Series**

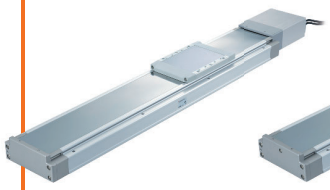

LEJS Series

Size	Max. work load [kg]	Stroke [mm]
40	55	200 to 1200
63	85	300 to 1500

Belt drive
***LEJB* Series**

LEJB Series

Size	Max. work load [kg]	Stroke [mm]
40	20	200 to 2000
63	30	300 to 3000

Guide Rod Slider
Step Motor (Servo/24 VDC)

Belt drive
***LEL* Series**

LEL25M Series
Sliding bearing

Size	Max. work load [kg]	Stroke [mm]
25	3	Up to 1000

LEL25L Series
Ball bushing bearing

Size	Max. work load [kg]	Stroke [mm]
25	5	Up to 1000

Low Profile Slider Type
Step Motor (Servo/24 VDC)

Basic type
***LEMB* Series**

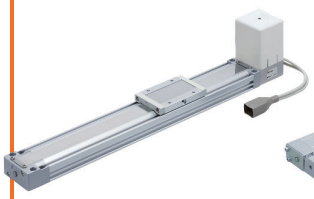

LEMB Series

Size	Max. work load [kg]	Stroke [mm]
25	6	Up to 2000
32	11	Up to 2000

Cam follower guide type
***LEMC* Series**

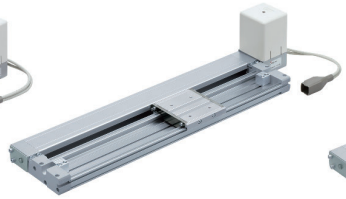

LEMC Series

Size	Max. work load [kg]	Stroke [mm]
25	10	Up to 2000
32	20	Up to 2000

Linear guide single axis type
***LEMH* Series**

LEMH Series

Size	Max. work load [kg]	Stroke [mm]
25	10	Up to 1000
32	20	Up to 1500

Linear guide double axis type
***LEMHT* Series**

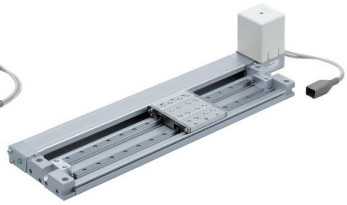

LEMHT Series

Size	Max. work load [kg]	Stroke [mm]
25	10	Up to 1000
32	20	Up to 1500

SMC Electric Actuator

Rod Type Step Motor (Servo/24 VDC) Servo Motor (24 VDC)

p. 34, 104

Basic type
LEY Series

Dust-tight/Water-jet-proof

In-line motor type
LEY□D Series

Dust-tight/Water-jet-proof

Guide rod type
LEYG Series

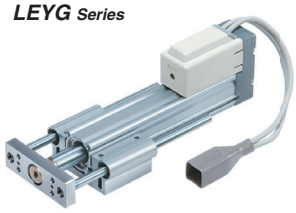

Guide rod type /In-line motor type
LEYG□D Series

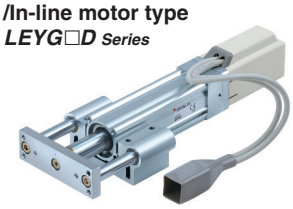

LEY Series

Size	Pushing force [N]	Stroke [mm]
16	141	Up to 300
25	452	Up to 400
32	707	Up to 500
40	1058	Up to 500

LEYG Series

Size	Pushing force [N]	Stroke [mm]
16	141	Up to 200
25	452	Up to 300
32	707	Up to 300
40	1058	Up to 300

AC Servo Motor

p. 34, 104

Basic type
LEY Series

Dust-tight/Water-jet-proof

In-line motor type
LEY□D Series

Dust-tight/Water-jet-proof

Guide rod type
LEYG Series

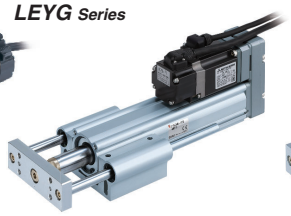

Guide rod type /In-line motor type
LEYG□D Series

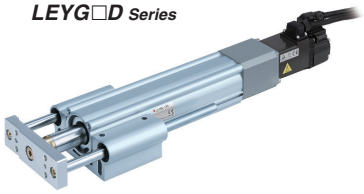

LEY Series

Size	Pushing force [N]	Stroke [mm]
25	485	Up to 400
32	588	Up to 500
63	3343	Up to 800

LEY Series

Size	Pushing force [N]	Stroke [mm]
25	485	Up to 400
32	736	Up to 500
63	1910	Up to 800

LEYG Series

Size	Pushing force [N]	Stroke [mm]
25	485	Up to 300
32	588	

LEYG Series

Size	Pushing force [N]	Stroke [mm]
25	485	Up to 300
32	736	

Slide Table Step Motor (Servo/24 VDC) Servo Motor (24 VDC)

LES Series

Basic type/R type
LES□R Series

Symmetrical type/L type
LES□L Series

Size	Max. work load [kg]	Stroke [mm]
8	1	30, 50, 75
16	3	30, 50 75, 100
25	5	30, 50, 75 100, 125, 150

In-line motor type/D type
LES□D Series

LESH Series

Basic type/R type
LESH□R Series

Symmetrical type/L type
LESH□L Series

Size	Max. work load [kg]	Stroke [mm]
8	2	50, 75
16	6	50, 100
25	9	50, 100 150

In-line motor type/D type
LESH□D Series

Miniature Step Motor (Servo/24 VDC)

Rod type
LEPY Series

Slide table type
LEPS Series

LEPY Series

Size	Max. work load [kg]	Stroke [mm]
6	1	25, 50, 75
10	2	

LEPS Series

Size	Max. work load [kg]	Stroke [mm]
6	1	25
10	2	50

Rotary Table Step Motor (Servo/24 VDC)

Basic type
LER Series

High-precision type
LERH Series

LER Series

Size	Rotating torque [N·m]		Max. speed [°/s]	
	Basic	High torque	Basic	High torque
10	0.2	0.3	420	280
30	0.8	1.2		
50	6.6	10		

SMC Electric Actuator

Gripper Step Motor (Servo/24 VDC)

2-finger type
***LEHZ* Series**

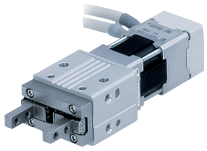

LEHZ Series

Size	Max. gripping force [N]		Stroke/both sides [mm]
	Basic	Compact	
10	14	6	4
16		8	6
20	40	28	10
25			14
32	130	—	22
40	210	—	30

2-finger type
With dust cover
***LEHZJ* Series**

LEHZJ Series

Size	Max. gripping force [N]		Stroke/both sides [mm]
	Basic	Compact	
10	14	6	4
16		8	6
20	40	28	10
25			14

2-finger type
Long stroke
***LEHF* Series**

LEHF Series

Size	Max. gripping force [N]	Stroke/both sides [mm]
10	7	16 (32)
20	28	24 (48)
32	120	32 (64)
40	180	40 (80)

∗ ( ): Long stroke

3-finger type
***LEHS* Series**

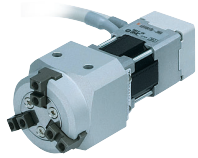

LEHS Series

Size	Max. gripping force [N]		Stroke/ diameter [mm]
	Basic	Compact	
10	5.5	3.5	4
20	22	17	6
32	90	—	8
40	130	—	12

Controller/Driver p. 190

Single Axis Controller

Step data input type
Servo motor
(24 VDC)
***LECA6* Series**

Gateway unit
***LEC-G* Series**

Programless type
Step motor
(Servo/24 VDC)
***LECP1* Series**

Pulse input type
Step motor
(Servo/24 VDC)
***LECPA* Series**

EtherCAT®/EtherNet/IP™/PROFINET/DeviceNet™/IO-Link direct input type
***JXC□* Series**

EtherCAT

EtherNet/IP

PROFINET

DeviceNet

IO-Link

Multi-Axis Controller

EtherNet/IP™ direct input type

For 3 axes ***JXC92* Series**

Parallel I/O/EtherNet/IP™ direct input type

For 4 axes ***JXC73* Series**
***JXC83* Series**

***JXC93* Series**
EtherNet/IP

Driver p. 246

AC Servo Motor Driver

Pulse input type
***LECSA* Series**
***LECSB* Series**
- Absolute encoder (LECSB)
- Built-in positioning function (LECSA)

***LECSA* Series** ***LECSB* Series**

CC-Link
direct input type
***LECSC* Series**

CC-Link

SSCNET Ⅲ type
***LECSS* Series**

SSCNETⅢ SERVO SYSTEM CONTROLLER NETWORK

SSCNET Ⅲ/H type
***LECSS-T* Series**

SSCNETⅢ/H SERVO SYSTEM CONTROLLER NETWORK

MECHATROLINK-Ⅱ type
***LECYM* Series**

MECHATROLINK-Ⅱ

MECHATROLINK-Ⅲ type
***LECYU* Series**

MECHATROLINK-Ⅲ

Electric Actuator/Rod Type *LEY Series*

Step Motor (Servo/24 VDC) Servo Motor (24 VDC)

◎Rod Type *LEY Series*

Model Selection ..... p. 35
How to Order ..... p. 55
Specifications ..... p. 59
Construction ..... p. 61
Dimensions ..... p. 63
Accessory Mounting Brackets ..... p. 97

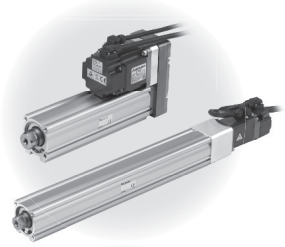

AC Servo Motor

LECS□ Series

◎Rod Type *LEY Series* Size 25, 32

Model Selection ..... p. 41
How to Order ..... p. 69
Specifications ..... p. 71
Construction ..... p. 73
Dimensions ..... p. 74

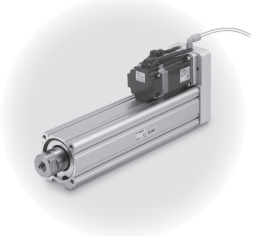

◎Rod Type *LEY Series* Size 63 Dust-tight/Water-jet-proof (IP65 Equivalent) * Option

Model Selection ..... p. 41
How to Order ..... p. 79
Specifications ..... p. 80
Construction ..... p. 81
Dimensions ..... p. 82

LECY□ Series

◎Rod Type *LEY Series*

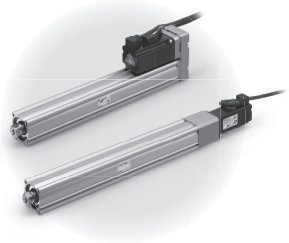

Model Selection ..... p. 48
How to Order ..... p. 87
Specifications ..... p. 89
Construction ..... p. 91
Dimensions ..... p. 92

Auto Switch ..... p. 101

Electric Actuator/Guide Rod Type *LEYG Series*

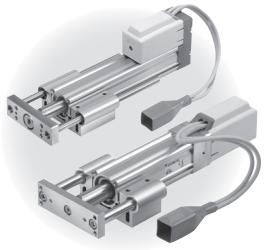

Step Motor (Servo/24 VDC) Servo Motor (24 VDC)

◎Guide Rod Type *LEYG Series*

Model Selection ..... p. 105
How to Order ..... p. 121
Specifications ..... p. 125
Construction ..... p. 127
Dimensions ..... p. 129
Support Block ..... p. 133

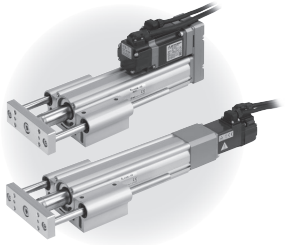

AC Servo Motor

LECS□ Series

◎Guide Rod Type *LEYG Series*

Model Selection ..... p. 111
How to Order ..... p. 135
Specifications ..... p. 137
Construction ..... p. 138
Dimensions ..... p. 139
Support Block ..... p. 141

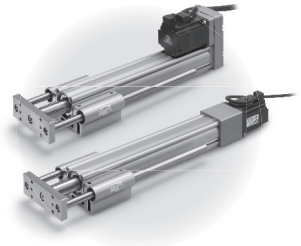

LECY□ Series

◎Guide Rod Type *LEYG Series*

Model Selection ..... p. 116
How to Order ..... p. 143
Specifications ..... p. 145
Construction ..... p. 146
Dimensions ..... p. 147
Support Block ..... p. 149

Environment

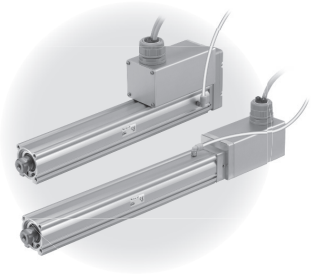

Step Motor (Servo/24 VDC) Servo Motor (24 VDC)

◎Rod Type *LEY-X5* (Made to Order) Dust-tight/Water-jet-proof (IP65 Equivalent)

Model Selection ..... p. 151
How to Order ..... p. 155
Specifications ..... p. 158
Construction ..... p. 160
Dimensions ..... p. 161

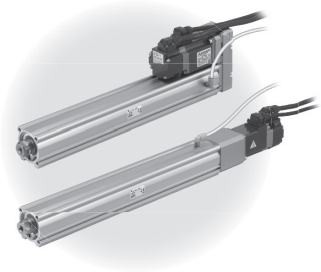

AC Servo Motor

***LECS□* Series**

◎Rod Type *LEY-X5* (Made to Order) Dust-tight/Water-jet-proof (IP65 Equivalent)

Model Selection ..... p. 43
How to Order ..... p. 163
Specifications ..... p. 164
Construction ..... p. 165
Dimensions ..... p. 166

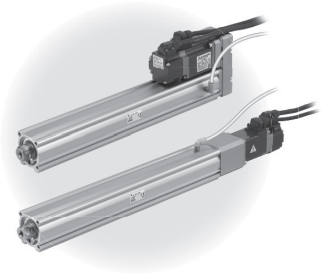

AC Servo Motor

***LECY□* Series**

◎Rod Type *LEY-X5* (Made to Order) Dust-tight/Water-jet-proof (IP65 Equivalent)

Model Selection ..... p. 50
How to Order ..... p. 169
Specifications ..... p. 171
Dimensions ..... p. 172

Auto Switch ..... p. 176

Step Motor (Servo/24 VDC) Servo Motor (24 VDC) AC Servo Motor

◎Rod Type *25A-LEY* Secondary Battery Compatible

..... p. 177

Specific Product Precautions ..... p. 185

◎Step Motor (Servo/24 VDC)/ Servo Motor (24 VDC) Controller

Step Data Input Type/***LECP6* Series** ..... p. 191
Communication Cable for Controller Setting/***LEC-W2A*** ... p. 200
Teaching Box/***LEC-T1*** ..... p. 201
Gateway Unit/***LEC-G* Series** ..... p. 203
Programless Controller/***LECP1* Series** ..... p. 207
Step Motor Driver/***LECPA* Series** ..... p. 214
Communication Cable for Controller Setting/***LEC-W2A*** ... p. 221
Teaching Box/***LEC-T1*** ..... p. 222
EtherCAT®/EtherNet/IP™/PROFINET/DeviceNet™/IO-Link
Direct Input Type/***JXCE1/91/P1/D1/L1* Series** ..... p. 224
Controller Setting Kit/***JXC-W2*** ..... p. 229
Teaching Box/***LEC-T1*** ..... p. 231

◎3-Axis Step Motor (Servo/24 VDC) Controller

EtherNet/IP™ Type/***JXC92* Series** ..... p. 233

◎4-Axis Step Motor (Servo/24 VDC) Controller

Parallel I/O Type/***JXC73/83* Series** ..... p. 235
EtherNet/IP™ Type/***JXC93* Series** ..... p. 235

◎AC Servo Motor Driver

***LECSA/LECSB/ LECSC/LECSS* Series** ..... p. 250
***LECSS-T* Series** ..... p. 250
***LECYM/LECYU* Series** ..... p. 271

Rod Type LEY Series

Step Motor (Servo/24 VDC) **Servo Motor** (24 VDC)

p. 55

Motor top/parallel type

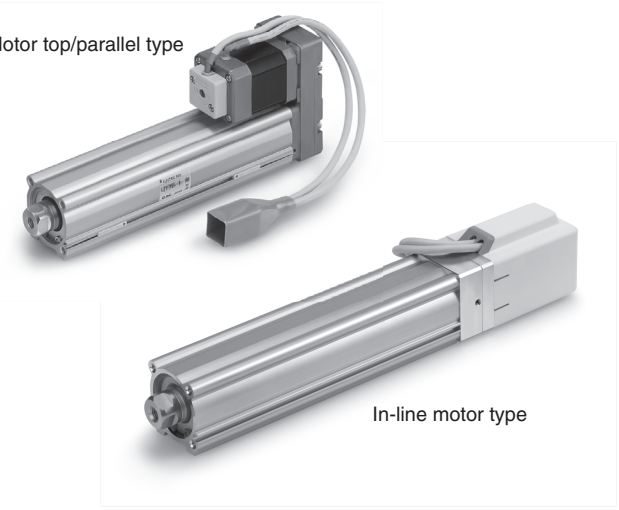

In-line motor type

AC Servo Motor

p. 69

Motor top/
parallel type

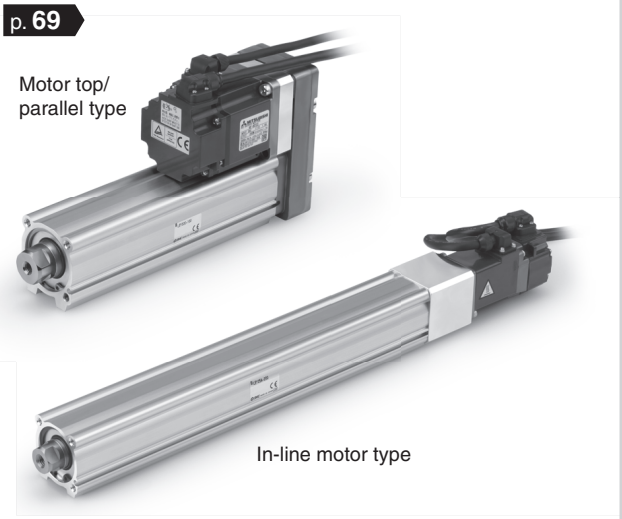

In-line motor type

Environment

Step Motor (Servo/24 VDC) **Servo Motor** (24 VDC)

Dust-tight/Water-jet-proof (IP65 Equivalent)

LEY-X5 (Made to order)

p. 155

Motor top mounting type

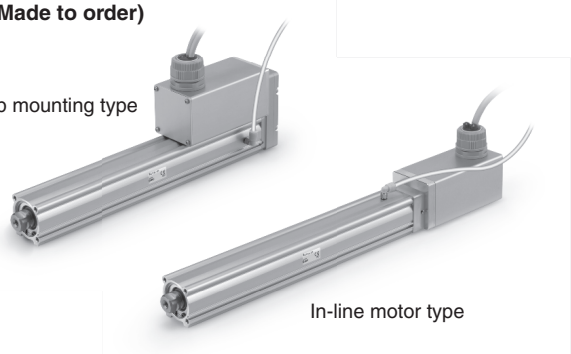

In-line motor type

Secondary Battery Compatible

25A-LEY

p. 177

Motor top/parallel type

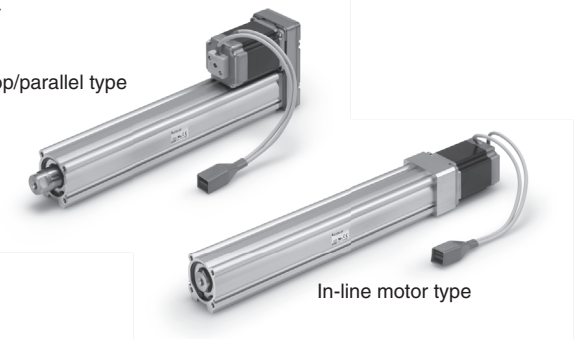

In-line motor type

AC Servo Motor

Dust-tight/Water-jet-proof (IP65 Equivalent)

LEY-X5 (Made to order)

p. 163

Motor top mounting type

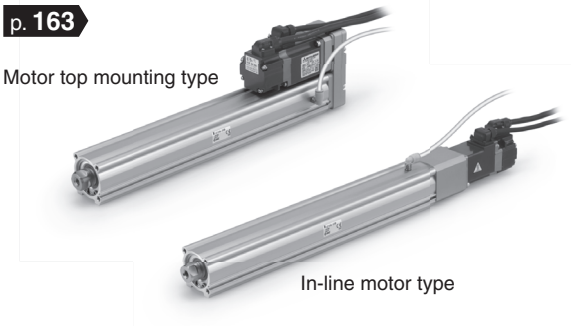

In-line motor type

Secondary Battery Compatible

25A-LEY

p. 181

Motor top/parallel type

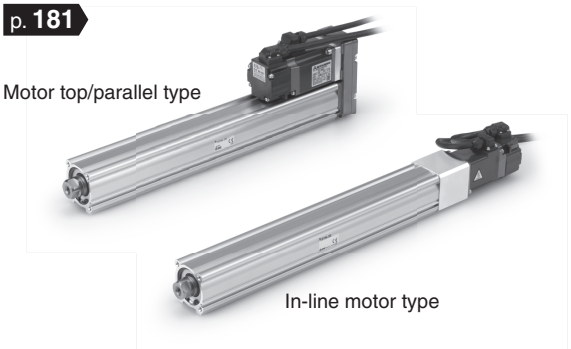

In-line motor type

Step Motor/Servo Motor Controller/Driver p. 200

AC Servo Motor Driver p. 246

Electric Actuator/Rod Type Secondary Battery Compatible

LEY/25A-LEY Series

Model Selection

LEY Series ▶p. 55 25A-LEY Series ▶p. 177

Selection Procedure

Positioning Control Selection Procedure

Step 1 Check the work load–speed. (Vertical transfer) → **Step 2** Check the cycle time.

Selection Example

Operating conditions

- Workpiece mass: 4 [kg]
- Speed: 100 [mm/s]
- Acceleration/Deceleration: 3000 [mm/s^2]
- Stroke: 200 [mm]
- Workpiece mounting condition: Vertical upward downward transfer

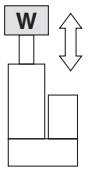

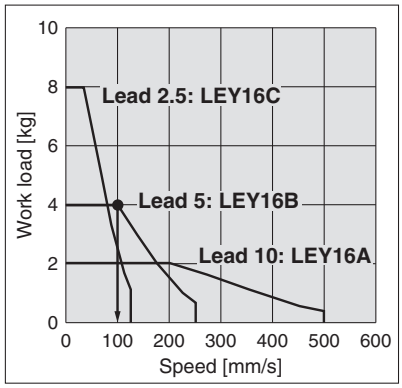

<Speed–Vertical work load graph> (LEY16/Step motor)

Step 1 **Check the work load–speed. <Speed–Vertical work load graph>**

Select the target model based on the workpiece mass and speed with reference to the <Speed–Vertical work load graph>.

Selection example) The **LEY16B** is temporarily selected based on the graph shown on the right side.

* It is necessary to mount a guide outside the actuator when used for horizontal transfer. When selecting the target model, refer to the horizontal work load in the specifications on page 59 and the precautions.

Step 2 **Check the cycle time.**

Calculate the cycle time using the following calculation method.

- Cycle time T can be found from the following equation.

$$T = T1 + T2 + T3 + T4 \text{ [s]}$$

- T1: Acceleration time and T3: Deceleration time can be obtained by the following equation.

$$T1 = V/a1 \text{ [s]} \qquad T3 = V/a2 \text{ [s]}$$

- T2: Constant speed time can be found from the following equation.

$$T2 = \frac{L - 0.5 \cdot V \cdot (T1 + T3)}{V} \text{ [s]}$$

- T4: Settling time varies depending on the conditions such as motor types, load and in position of the step data. Therefore, calculate the settling time with reference to the following value.

$$T4 = 0.2 \text{ [s]}$$

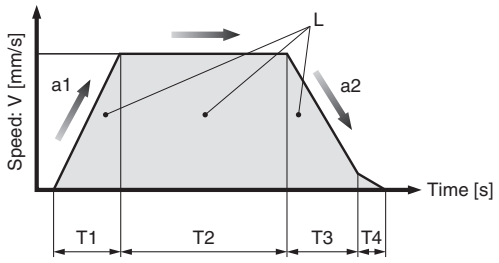

L : Stroke [mm] ··· (Operating condition)
V : Speed [mm/s] ··· (Operating condition)
a1: Acceleration [mm/s^2] ··· (Operating condition)
a2: Deceleration [mm/s^2] ··· (Operating condition)

T1: Acceleration time [s] ··· Time until reaching the set speed
T2: Constant speed time [s] ··· Time while the actuator is operating at a constant speed
T3: Deceleration time [s] ··· Time from the beginning of the constant speed operation to stop
T4: Settling time [s] ··· Time until positioning is completed

Calculation example)
T1 to T4 can be calculated as follows.

$$T1 = V/a1 = 100/3000 = 0.033 \text{ [s]}, \quad T3 = V/a2 = 100/3000 = 0.033 \text{ [s]}$$

$$T2 = \frac{L - 0.5 \cdot V \cdot (T1 + T3)}{V} = \frac{200 - 0.5 \cdot 100 \cdot (0.033 + 0.033)}{100} = 1.97 \text{ [s]}$$

$$T4 = 0.2 \text{ [s]}$$

Therefore, the cycle time can be obtained as follows.
$T = T1 + T2 + T3 + T4 = 0.033 + 1.967 + 0.033 + 0.2 =$ **2.233 [s]**

Based on the above calculation result, the LEY16B-200 is selected.

SMC

Selection Procedure

Pushing Control Selection Procedure

Step 1 Check the duty ratio. → **Step 2** Check the pushing force. → **Step 3** Check the lateral load on the rod end.

∗ The duty ratio is a ratio of the operation time in one cycle.

Selection Example

Operating conditions

- Mounting condition: Horizontal (pushing)
- Jig weight: 0.2 [kg]
- Pushing force: 60 [N]
- Duty ratio: 20 [%]
- Speed: 100 [mm/s]
- Stroke: 200 [mm]

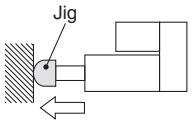

Step 1 **Check the duty ratio.**

<Conversion table of pushing force–duty ratio>

Select the [Pushing force] from the duty ratio with reference to the <Conversion table of pushing force–duty ratio>.

Selection example)
Based on the table below,
- Duty ratio: 20 [%]

Therefore, the set value of pushing force will be 70 [%].

<Conversion table of pushing force–duty ratio>
(LEY16/Step motor)

Set value of pushing force [%]	Duty ratio [%]	Continuous pushing time [minute]
40 or less	100	—
50	70	12
70	20	1.3
85	15	0.8

∗ [Set value of pushing force] is one of the step data input to the controller.
∗ [Continuous pushing time] is the time that the actuator can continuously keep pushing.

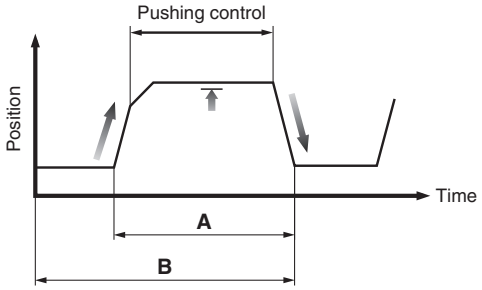

Duty ratio = A/B x 100 [%]

Step 2 **Check the pushing force. <Force conversion graph>**

Select the target model based on the set value of pushing force and force with reference to the <Force conversion graph>.

Selection example)
Based on the graph shown on the right side,
- Set value of pushing force: 70 [%]
- Pushing force: 60 [N]

Therefore, the **LEY16B** is temporarily selected.

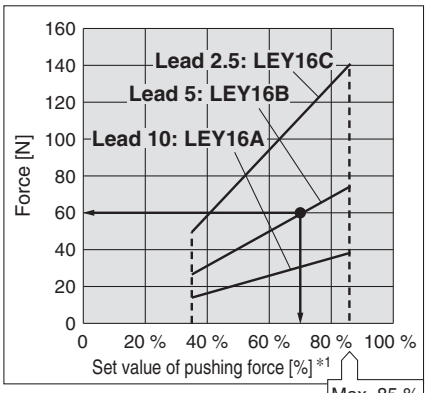

<Force conversion graph>
(LEY16/Step motor)

∗1 Set values for the controller.

Step 3 **Check the lateral load on the rod end.**
<Graph of allowable lateral load on the rod end>

Confirm the allowable lateral load on the rod end of the actuator: LEY16□, which has been selected temporarily with reference to the <Graph of allowable lateral load on the rod end>.

Selection example)
Based on the graph shown on the right side,
- Jig weight: 0.2 [kg] ≈ 2 [N]
- Product stroke: 200 [mm]

Therefore, the lateral load on the rod end is in the allowable range.

Based on the above calculation result, the LEY16B-200 is selected.

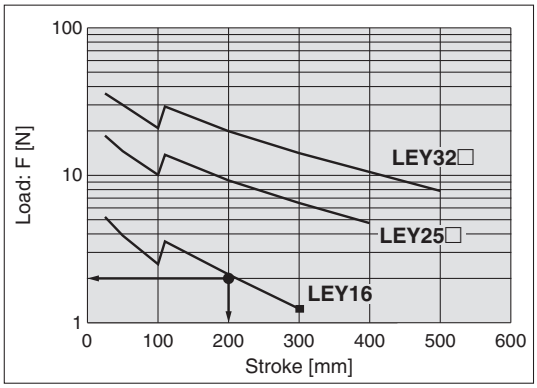

<Graph of allowable lateral load on the rod end>

Refer to page 38 for the LECPA, JXC□2/3 and page 39 for the LECA6.

Speed–Work Load Graph (Guide)
For Step Motor (Servo/24 VDC) LECP1, LECPMJ, JXC□1

Horizontal

LEY16□

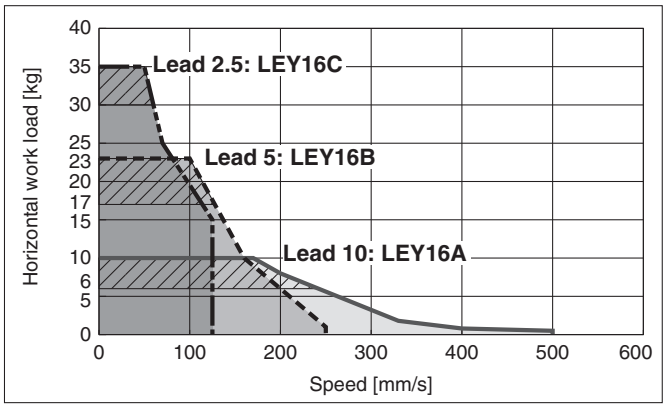

LEY25□

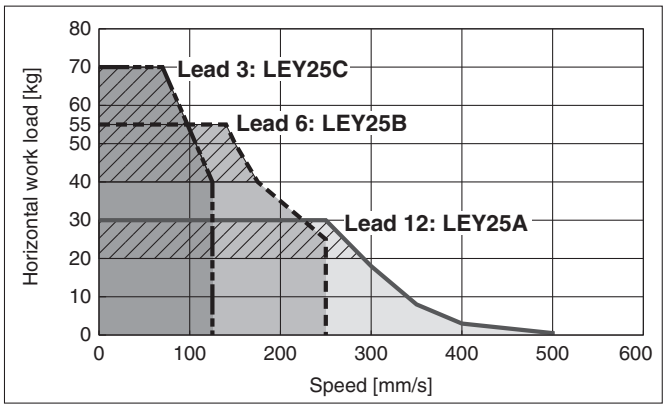

LEY32□

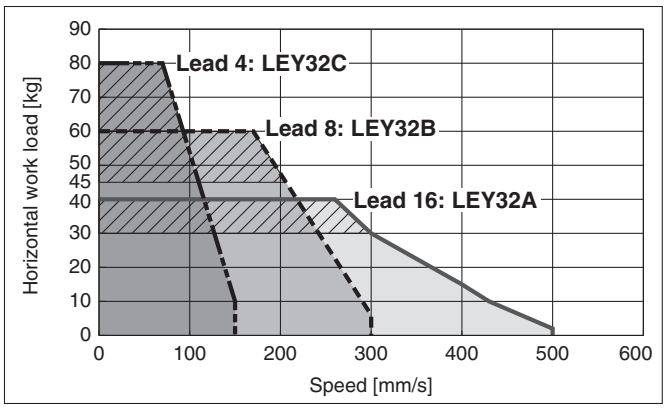

LEY40□

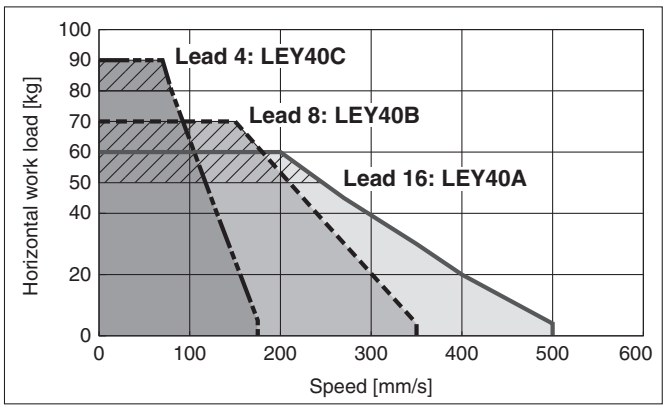

Vertical

LEY16□

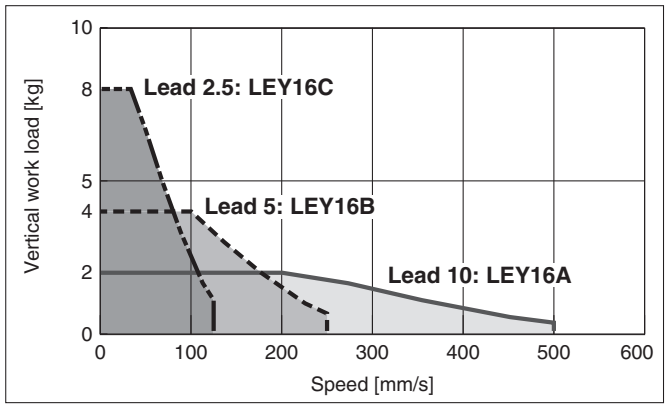

LEY25□

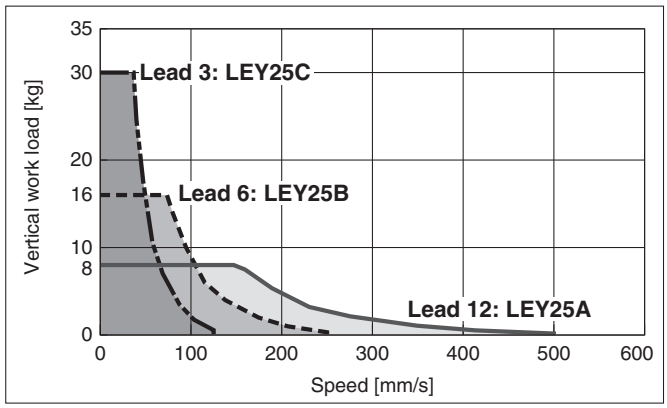

LEY32□

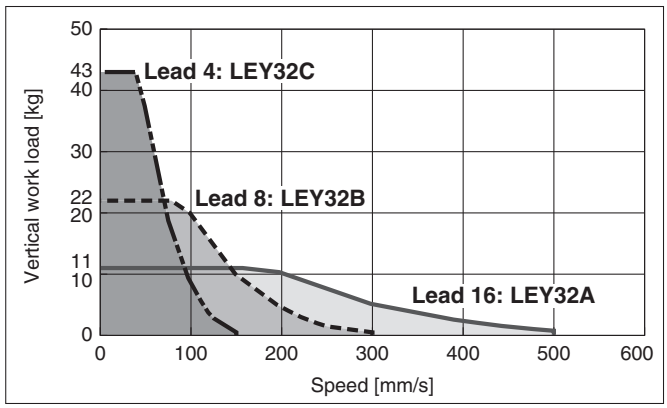

LEY40□

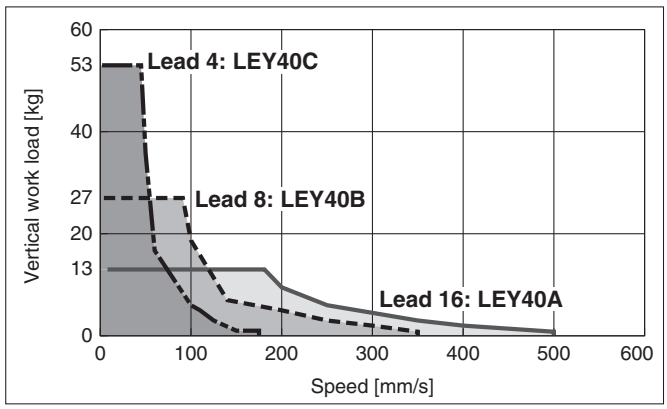

Refer to page 37 for the LECP1, LECPMJ, JXC□1 and page 39 for the LECA6.

Speed–Work Load Graph (Guide)
For Step Motor (Servo/24 VDC) LECPA, JXC□$^{2}_{3}$

Horizontal

LEY16□

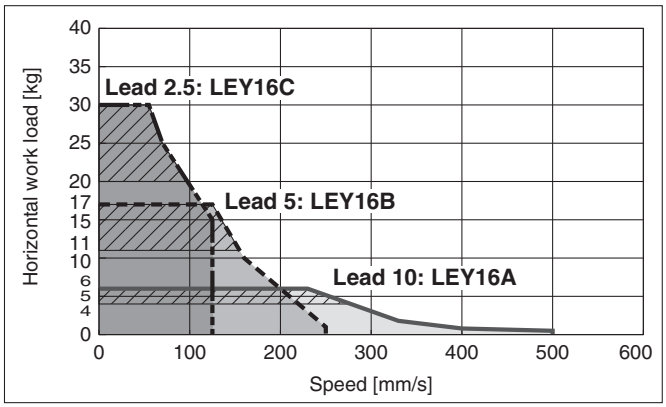

LEY25□

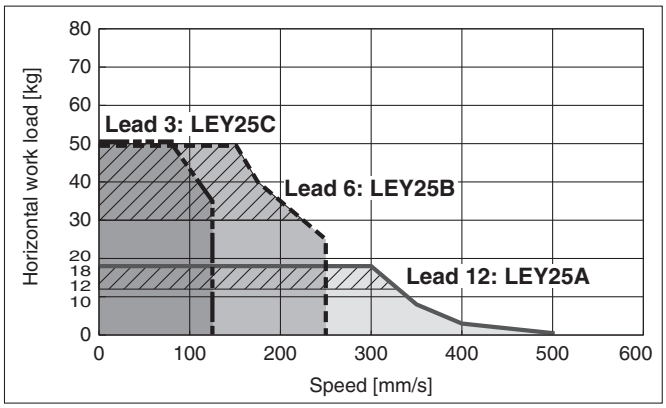

LEY32□

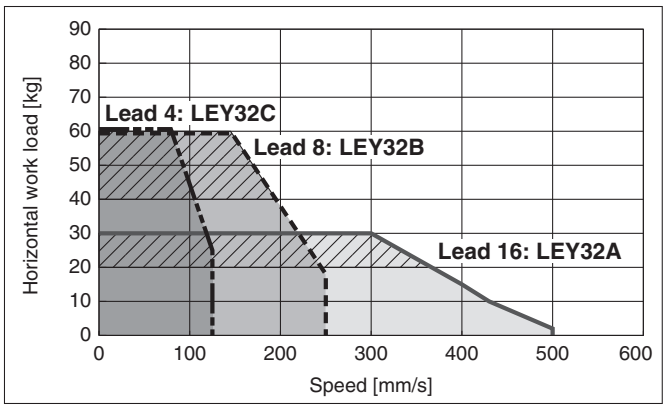

LEY40□

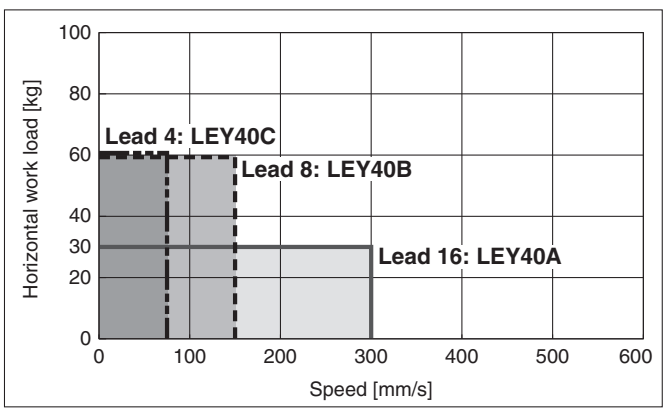

Vertical

LEY16□

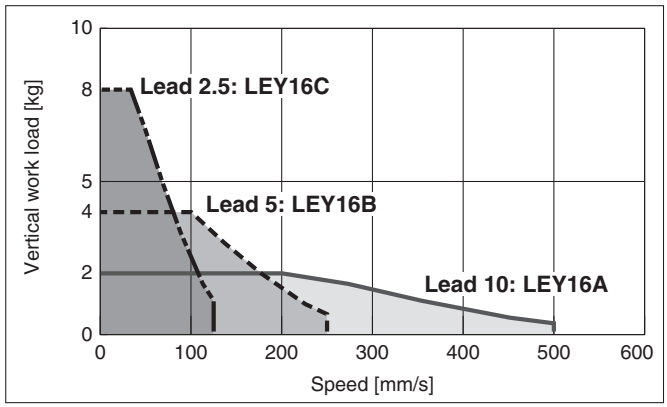

LEY25□

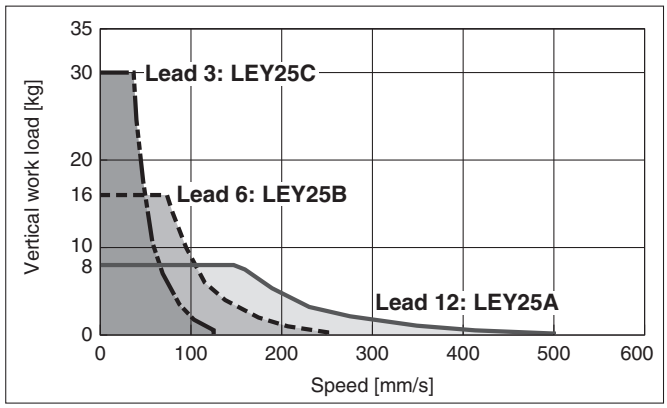

LEY32□

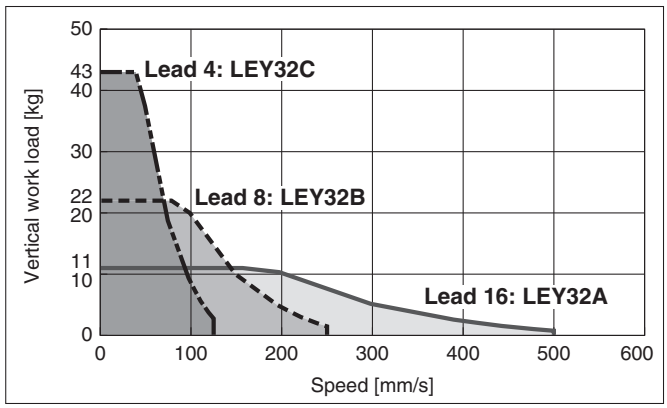

LEY40□

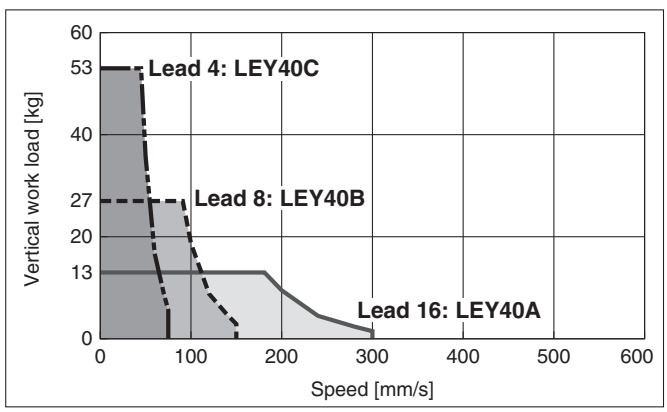

Refer to page 37 for the LECP1, LECPMJ, JXC□1 and page 39 for the LECPA, JXC□$^{2}_{3}$.

Speed–Work Load Graph (Guide) For Servo Motor (24 VDC) LECA6

Horizontal

LEY16□A

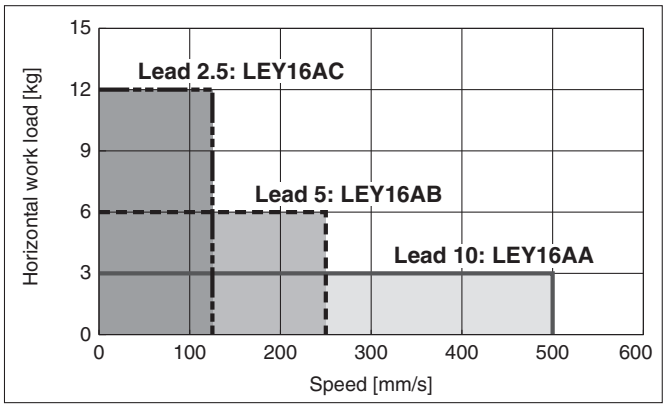

LEY25□A

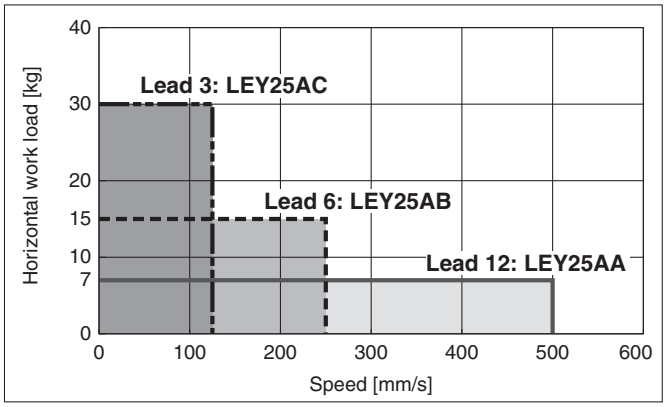

Vertical

LEY16□A

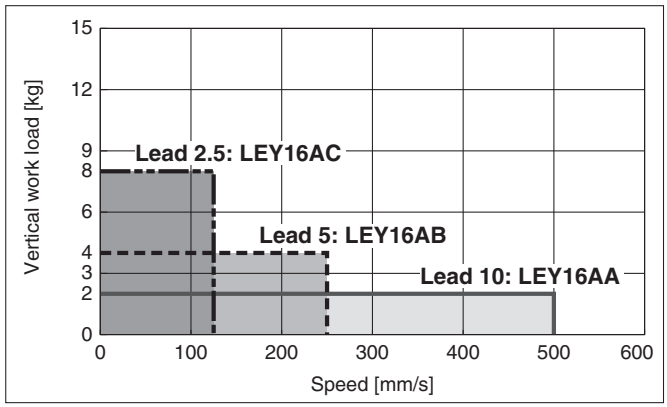

LEY25□A

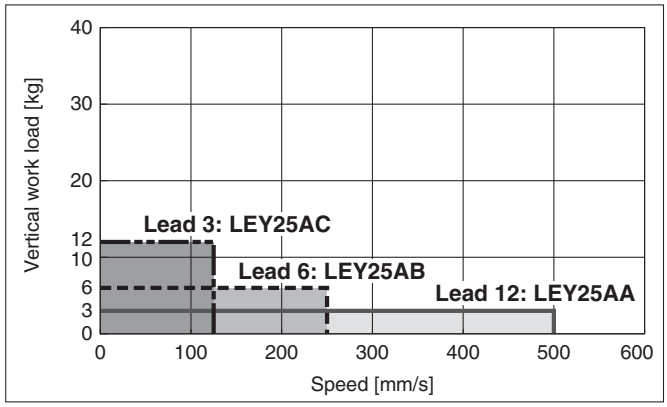

Graph of Allowable Lateral Load on the Rod End (Guide)

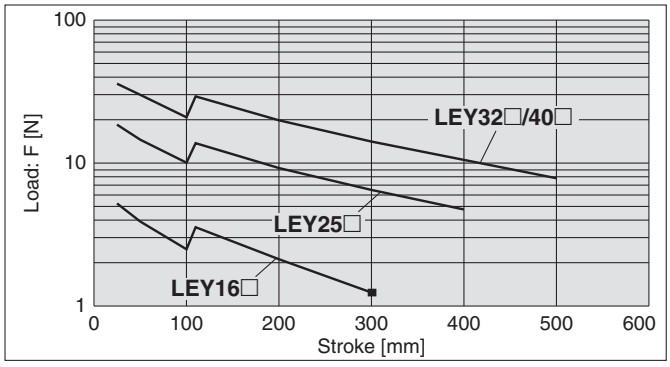

[Stroke] = [Product stroke] + [Distance from the rod end to the centre of gravity of the workpiece]

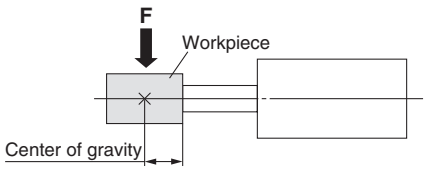

Rod Displacement: δ [mm]

Size \ Stroke	30	50	100	150	200	250	300	350	400	450	500
16	±0.4	±0.5	±0.9	±0.8	±1.1	±1.3	±1.5	—	—	—	—
25	±0.3	±0.4	±0.7	±0.7	±0.9	±1.1	±1.3	±1.5	±1.7	—	—
32, 40	±0.3	±0.4	±0.7	±0.6	±0.8	±1.0	±1.1	±1.3	±1.5	±1.7	±1.8

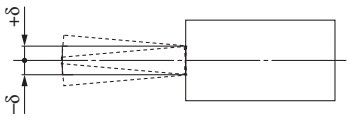

Non-rotating Accuracy of Rod

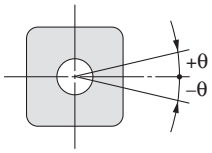

Size	Non-rotating accuracy θ
16	±1.1°
25	±0.8°
32	±0.7°
40	

* Avoid using the electric actuator in such a way that rotational torque would be applied to the piston rod.
This may cause the deformation of the non-rotating guide, abnormal auto switch responses, play in the internal guide, or an increase in the sliding resistance.

Force Conversion Graph (Guide)

Step Motor (Servo/24 VDC)

LEY16

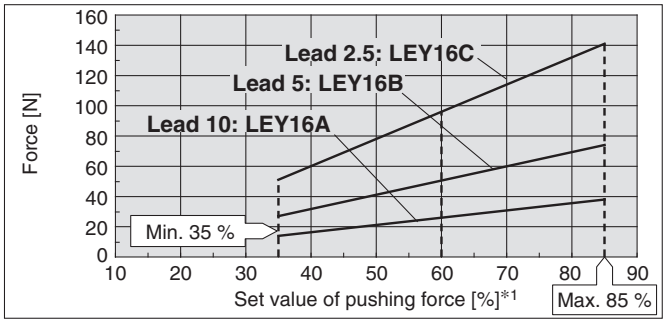

Ambient temperature	Set value of pushing force [%]	Duty ratio [%]	Continuous pushing time [minute]
25 °C or less	85 or less	100	—
40 °C	40 or less	100	—
	50	70	12
	70	20	1.3
	85	15	0.8

LEY25

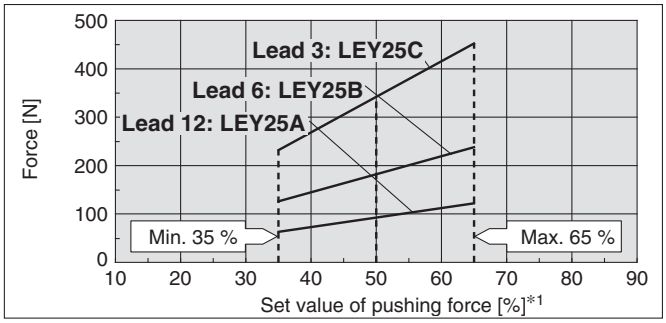

Ambient temperature	Set value of pushing force [%]	Duty ratio [%]	Continuous pushing time [minute]
40 °C or less	65 or less	100	—

LEY32

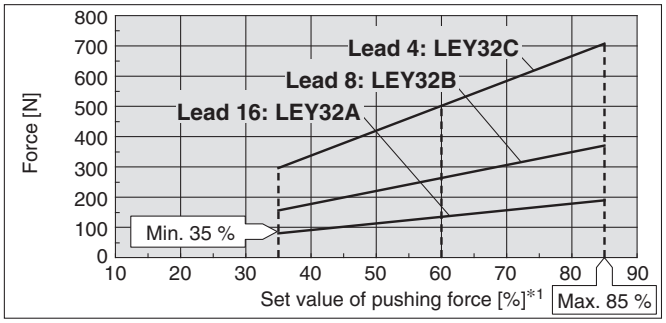

Ambient temperature	Set value of pushing force [%]	Duty ratio [%]	Continuous pushing time [minute]
25 °C or less	85 or less	100	—
40 °C	65 or less	100	—
	85	50	15

LEY40

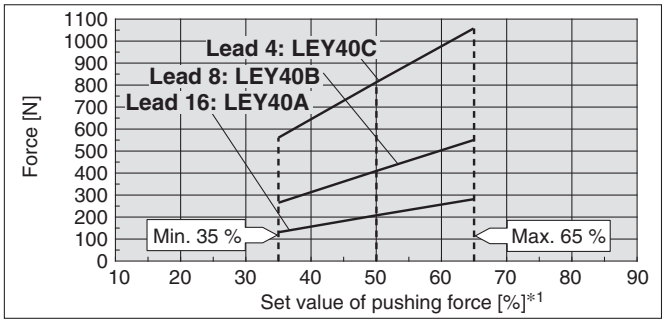

Ambient temperature	Set value of pushing force [%]	Duty ratio [%]	Continuous pushing time [minute]
40 °C or less	65 or less	100	—

*1 Set values for the controller

Servo Motor (24 VDC)

LEY16□A

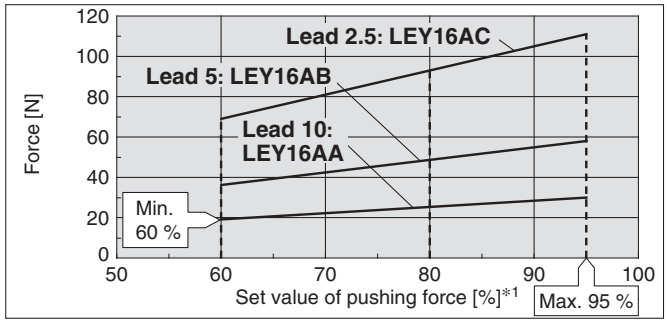

Ambient temperature	Set value of pushing force [%]	Duty ratio [%]	Continuous pushing time [minute]
40 °C or less	95 or less	100	—

LEY25□A

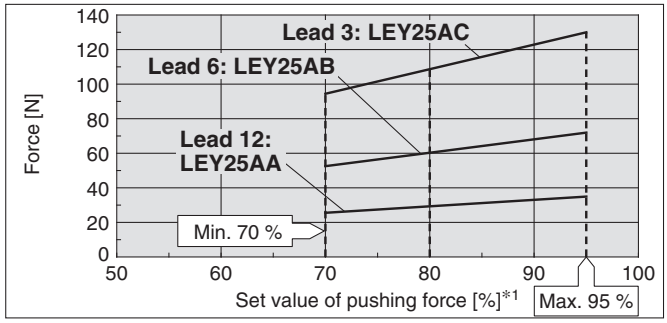

Ambient temperature	Set value of pushing force [%]	Duty ratio [%]	Continuous pushing time [minute]
40 °C or less	95 or less	100	—

<Limit Values for Pushing Force and Trigger Level in Relation to Pushing Speed>

Without Load

Model	Lead	Pushing speed [mm/s]	Pushing force (Setting input value)
LEY16	A/B/C	21 to 50	60 to 85 %
LEY25	A/B/C	21 to 35	50 to 65 %
LEY32	A	24 to 30	60 to 85 %
	B/C	21 to 30	
LEY40	A	24 to 30	50 to 65 %
	B/C	21 to 30	

Model	Lead	Pushing speed [mm/s]	Pushing force (Setting input value)
LEY16□A	A/B/C	21 to 50	80 to 95 %
LEY25□A	A/B/C	21 to 35	80 to 95 %

There is a limit to the pushing force in relation to the pushing speed. If the product is operated outside of the range (low pushing force), the completion signal [INP] may be output before the pushing operation has been completed (during the moving operation). If operating with the pushing speed below the min. speed, please check for operating problems before using the product.

<Set Values for Vertical Upward Transfer Pushing Operations>

For vertical loads (upward), set the pushing force to the max. value shown below and operate at the work load or less.

Model	LEY16□			LEY25□			LEY32□			LEY40□			LEY16□A			LEY25□A		
Lead	A	B	C	A	B	C	A	B	C	A	B	C	A	B	C	A	B	C
Work load [kg]	1	1.5	3	2.5	5	10	4.5	9	18	7	14	28	1	1.5	3	1.2	2.5	5
Pushing force	85 %			65 %			85 %			65 %			95 %			95 %		

Model Selection

Size 25, 32, 63

LEY Series ▶p. 69, 79 LECY□ Series ▶p. 87
LEY-X5 Series ▶p. 163 25A-LEY Series ▶p. 181

Selection Procedure

Positioning Control Selection Procedure

Step 1 Check the work load–speed. (Vertical transfer) → **Step 2** Check the cycle time.

Selection Example

Operating conditions

- Workpiece mass: 16 [kg]
- Speed: 300 [mm/s]
- Acceleration/Deceleration: 5000 [mm/s²]
- Stroke: 300 [mm]
- Workpiece mounting condition: Vertical upward downward transfer

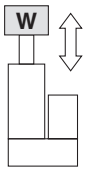

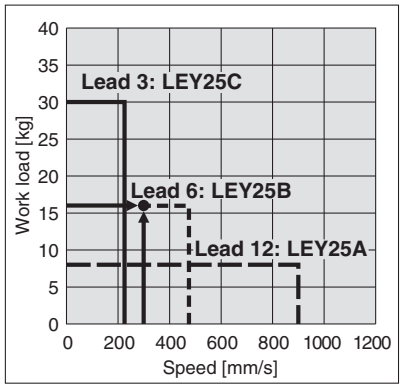

<Speed–Vertical work load graph> (LEY25)

Step 1 **Check the work load–speed. <Speed–Vertical work load graph>**

Select the target model based on the workpiece mass and speed with reference to the <Speed–Vertical work load graph>.

Selection example) The **LEY25B** is temporarily selected based on the graph shown on the right side.

* It is necessary to mount a guide outside the actuator when used for horizontal transfer. When selecting the target model, refer to the horizontal work load in the specifications on pages 71, 72, 80, 89, 90, and 164 and the precautions.

The regeneration option may be necessary. Refer to pages 43 and 44 for "Required Conditions for Regeneration Option."

Step 2 **Check the cycle time.**

Calculate the cycle time using the following calculation method.

- Cycle time T can be found from the following equation.

$$T = T1 + T2 + T3 + T4 \ [s]$$

- T1: Acceleration time and T3: Deceleration time can be obtained by the following equation.

$$T1 = V/a1 \ [s] \qquad T3 = V/a2 \ [s]$$

- T2: Constant speed time can be found from the following equation.

$$T2 = \frac{L - 0.5 \cdot V \cdot (T1 + T3)}{V} \ [s]$$

- T4: Settling time varies depending on the motor type and load. The value below is recommended.

$$T4 = 0.05 \ [s]$$

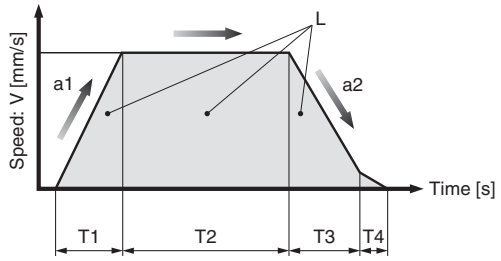

L : Stroke [mm] ··· (Operating condition)
V : Speed [mm/s] ··· (Operating condition)
a1: Acceleration [mm/s²] ··· (Operating condition)
a2: Deceleration [mm/s²] ··· (Operating condition)

T1: Acceleration time [s] ··· Time until reaching the set speed
T2: Constant speed time [s] ··· Time while the actuator is operating at a constant speed
T3: Deceleration time [s] ··· Time from the beginning of the constant speed operation to stop
T4: Settling time [s] ··· Time until positioning is completed

Calculation example)
T1 to T4 can be calculated as follows.

$T1 = V/a1 = 300/5000 = 0.06$ [s], $T3 = V/a2 = 300/5000 = 0.06$ [s]

$$T2 = \frac{L - 0.5 \cdot V \cdot (T1 + T3)}{V} = \frac{300 - 0.5 \cdot 300 \cdot (0.06 + 0.06)}{300} = 0.94 \ [s]$$

$T4 = 0.05$ [s]

Therefore, the cycle time can be obtained as follows.
$T = T1 + T2 + T3 + T4 = 0.06 + 0.94 + 0.06 + 0.05 =$ **1.11 [s]**

Based on the above calculation result, the LEY25S2B-300 is selected.

Selection Procedure

Force Control Selection Procedure

Step 1 Check the duty ratio. → **Step 2** Check the force. → **Step 3** Check the lateral load on the rod end.

∗ The duty ratio is a ratio of the operation time in one cycle.

Selection Example

Operating conditions

- Mounting condition: Horizontal (pushing)
- Jig weight: 0.5 [kg]
- Force: 255 [N]
- Duty ratio: 60 [%]
- Speed: 100 [mm/s]
- Stroke: 300 [mm]

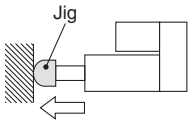

Step 1 **Check the duty ratio.**
<Conversion table of force–duty ratio>

Select the [Force] from the duty ratio with reference to the <Conversion table of force–duty ratio>.

Selection example)
Based on the table below,
- Duty ratio: 60 [%]

Therefore, Torque limit/Command value will be 30 [%].

<Conversion table of force–duty ratio>
(LEY25/AC Servo motor)

Torque limit/ Command value [%]	Duty ratio [%]	Continuous pushing time [minute]
25 or less	100	—
30	60	1.5

∗ [Torque limit/Command value [%]] is the set value for the driver.
∗ [Continuous pushing time] is the time that the actuator can continuously keep pushing.

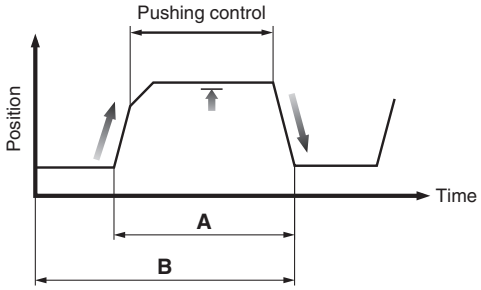

Duty ratio = A/B x 100 [%]

Step 2 **Check the force. <Force conversion graph>**

Select the target model based on the torque limit/command value and pushing force with reference to the <Force conversion graph>.

Selection example)
Based on the graph shown on the right side,
- Torque limit/Command value: 30 [%]
- Force: 255 [N]

Therefore, the **LEY25B** is temporarily selected.

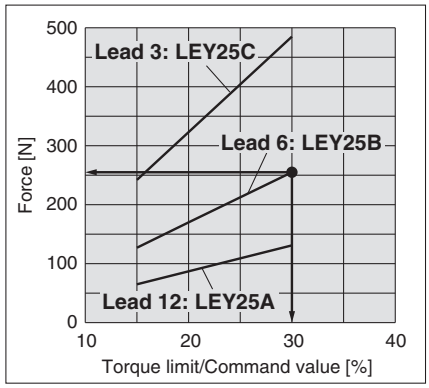

<Force conversion graph>
(LEY25)

Step 3 **Check the lateral load on the rod end.**
<Graph of allowable lateral load on the rod end>

Confirm the allowable lateral load on the rod end of the actuator: LEY25B, which has been selected temporarily with reference to the <Graph of allowable lateral load on the rod end>.

Selection example)
Based on the graph shown on the right side,
- Jig weight: 0.5 [kg] ≈ 5 [N]
- Product stroke: 300 [mm]

Therefore, the lateral load on the rod end is in the allowable range.

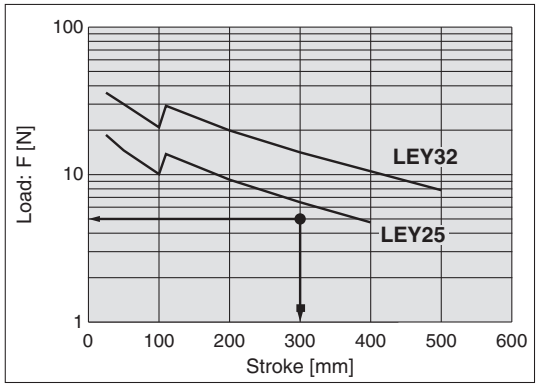

<Graph of allowable lateral load on the rod end>

Based on the above calculation result, the LEY25S2B-300 is selected.

Speed–Vertical Work Load Graph/Required Conditions for "Regeneration Option"

LEY25□S$^{2}_{6}$/T6 (Motor mounting position: Top/Parallel, In-line)

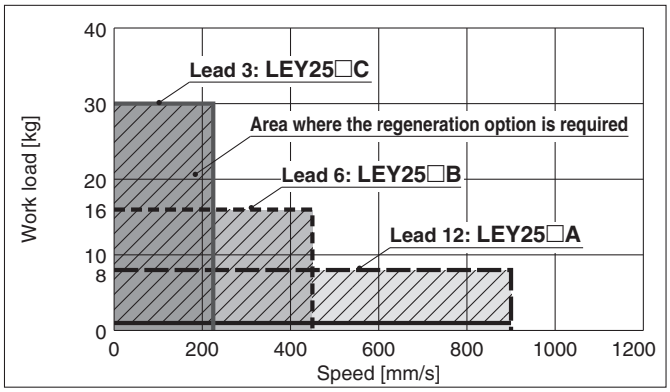

LEY32□S$^{3}_{7}$/T7 (Motor mounting position: Top/Parallel)

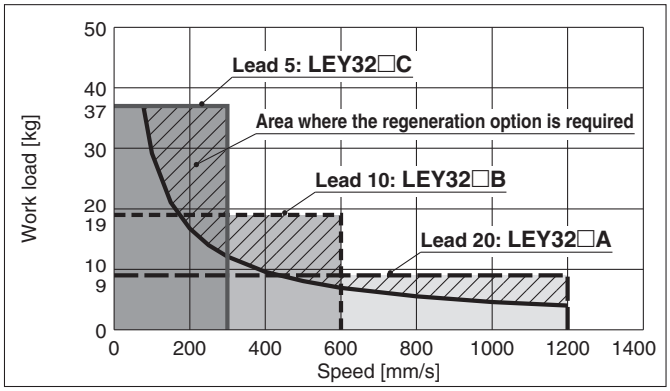

LEY63□S$^{4}_{8}$/T8 (Motor mounting position: Top/Parallel, In-line)

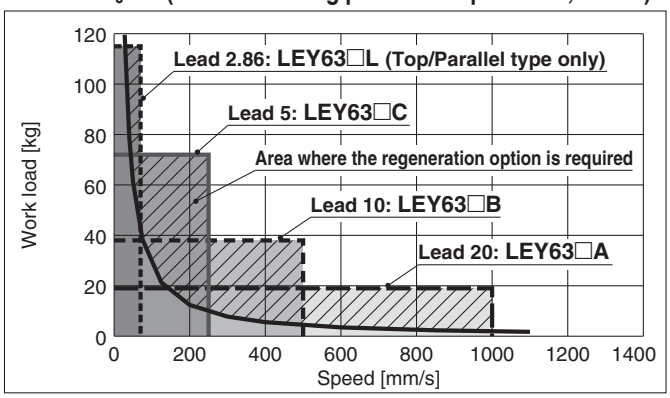

Required conditions for "Regeneration option"

∗ Regeneration option is required when using product above regeneration line in graph. (Order separately.)

"Regeneration Option" Models

Size	Model
LEY25□	LEC-MR-RB-032
LEY32□	LEC-MR-RB-032
LEY63□	LEC-MR-RB-12

LEY32DS$^{3}_{7}$/T7 (Motor mounting position: In-line)

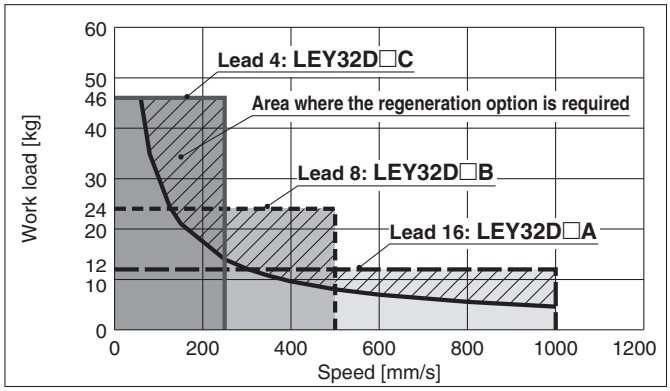

Speed–Horizontal Work Load Graph/Required Conditions for "Regeneration Option"

LEY25□S$^{2}_{6}$/T6 (Motor mounting position: Top/Parallel, In-line)

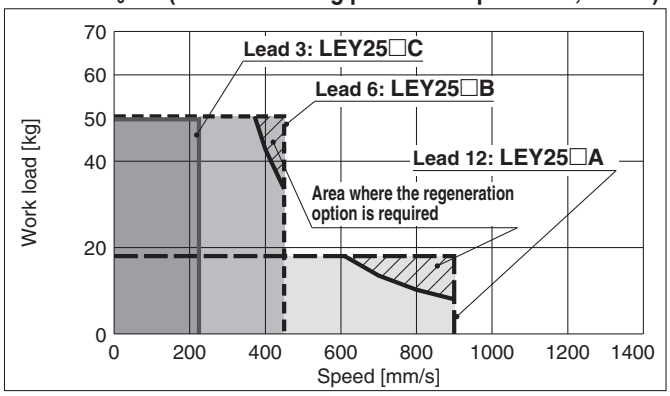

Required conditions for "Regeneration option"

∗ Regeneration option is required when using product above regeneration line in graph. (Order separately.)

"Regeneration Option" Models

Size	Model
LEY25□	LEC-MR-RB-032
LEY32□	LEC-MR-RB-032
LEY63□	—

LEY32□S$^{3}_{7}$/T7 (Motor mounting position: Top/Parallel)

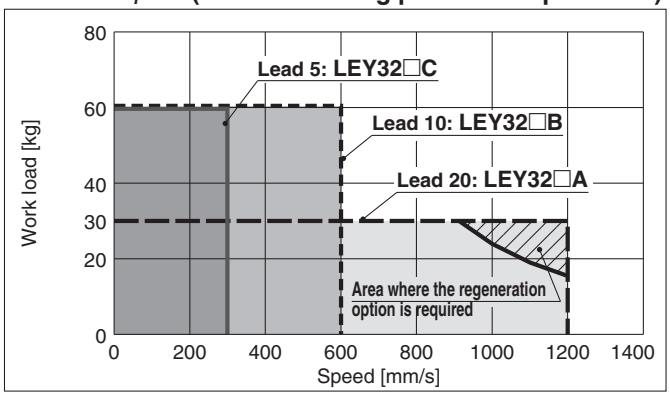

LEY32DS$^{3}_{7}$/T7 (Motor mounting position: In-line)

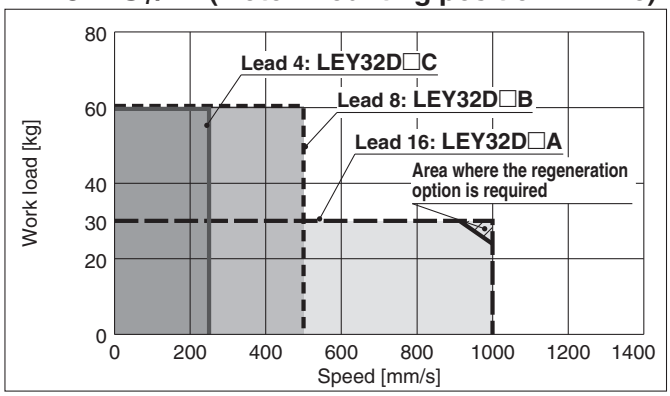

LEY63□S$^{4}_{8}$/T8 (Motor mounting position: Top/Parallel, In-line)

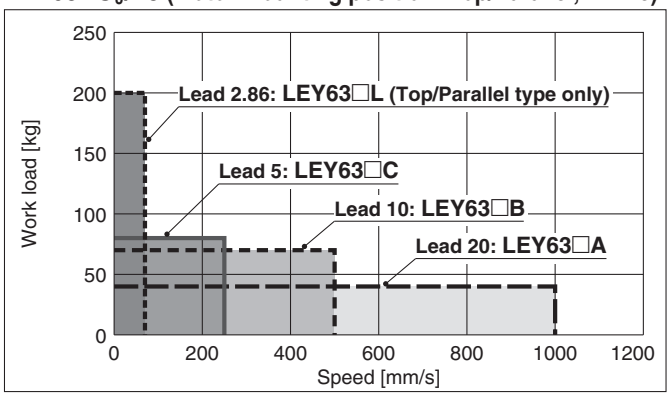

Allowable Stroke Speed

[mm/s]

Model	AC servo motor	Lead Symbol	Lead [mm]	Stroke [mm] 30	50	100	150	200	250	300	350	400	450	500	600	700	800
LEY25□S$^{2}_{6}$/T6 Motor mounting position: Top/Parallel, In-line	100 W /□40	**A**	12	900							600		—	—	—		
		B	6	450							300		—	—	—		
		C	3	225							150		—	—	—		
		(Motor rotation speed)		(4500 rpm)							(3000 rpm)		—	—	—		
LEY32□S$^{3}_{7}$/T7 Motor mounting position: Top/Parallel	200 W /□60	**A**	20	1200									800		—		
		B	10	600									400		—		
		C	5	300									200		—		
		(Motor rotation speed)		(3600 rpm)									(2400 rpm)		—		
LEY32DS$^{3}_{7}$/T7 Motor mounting position: In-line	200 W /□60	**A**	16	1000									640		—		
		B	8	500									320		—		
		C	4	250									160		—		
		(Motor rotation speed)		(3750 rpm)									(2400 rpm)		—		
LEY63□S$^{4}_{8}$/T8 Motor mounting position: Top/Parallel, In-line	400 W /□60	**A**	20	1000											800	600	500
		B	10	500											400	300	250
		C	5	250											200	150	125
		(Motor rotation speed)		(3000 rpm)											(2400 rpm)	(1800 rpm)	(1500 rpm)
		L∗1	2.86	70													
		(Motor rotation speed)		(1470 rpm)													

∗1 Top/Parallel type only

Force Conversion Graph (Guide)
For LECSA, LECSB, LECSC, LECSS

LEY25□S$^{2}_{6}$ (Motor mounting position: Top/Parallel, In-line)

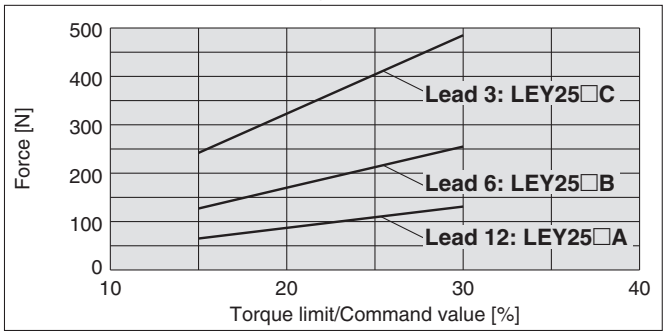

Torque limit/Command value [%]	Duty ratio [%]	Continuous pushing time [minute]
25 or less	100	—
30	60	1.5

LEY32□S$^{3}_{7}$ (Motor mounting position: Top/Parallel)

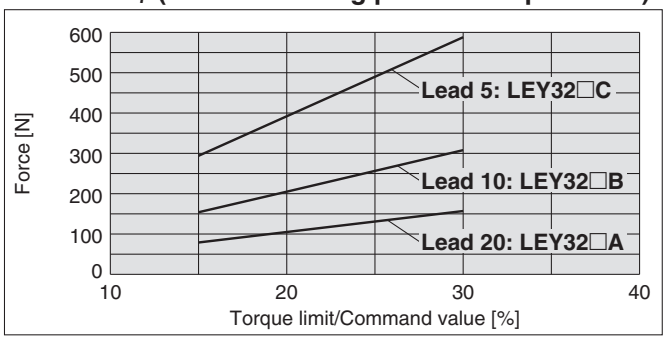

Torque limit/Command value [%]	Duty ratio [%]	Continuous pushing time [minute]
25 or less	100	—
30	60	1.5

LEY32DS$^{3}_{7}$ (Motor mounting position: In-line)

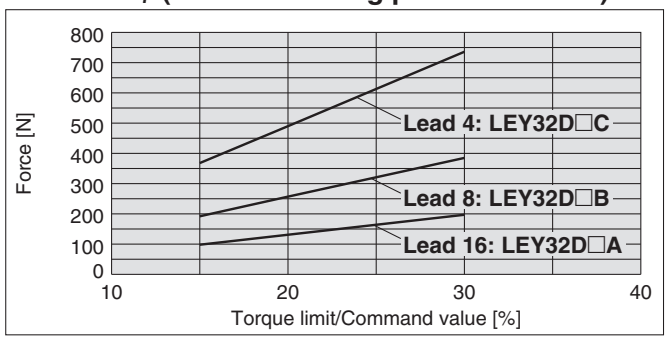

Torque limit/Command value [%]	Duty ratio [%]	Continuous pushing time [minute]
25 or less	100	—
30	60	1.5

LEY63□S$^{4}_{8}$ (Motor mounting position: Top/Parallel, In-line)

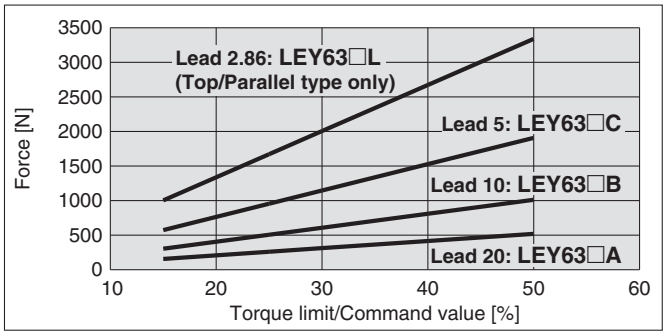

Torque limit/Command value [%]	Duty ratio [%]	Continuous pushing time [minute]
25 or less	100	—
30	60	1.5
40	30	0.5
50	20	0.16

Force Conversion Graph (Guide)
For LECSS-T

LEY25□T6 (Motor mounting position: Top/Parallel, In-line)

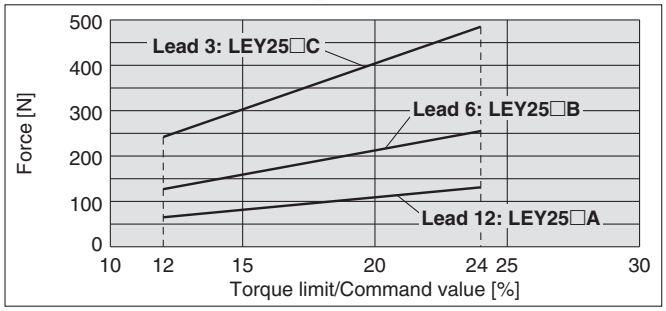

Torque limit/Command value [%]	Duty ratio [%]	Continuous pushing time [minute]
20 or less	100	—
24	60	1.5

LEY32□T7 (Motor mounting position: Top/Parallel)

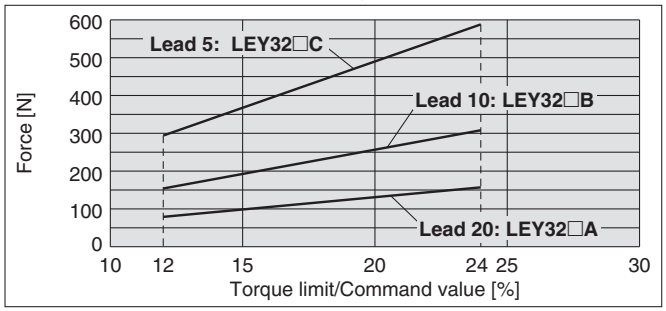

Torque limit/Command value [%]	Duty ratio [%]	Continuous pushing time [minute]
20 or less	100	—
24	60	1.5

LEY32DT7 (Motor mounting position: In-line)

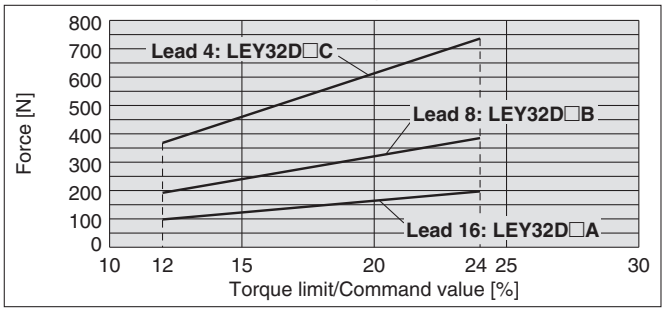

Torque limit/Command value [%]	Duty ratio [%]	Continuous pushing time [minute]
20 or less	100	—
24	60	1.5

LEY63□T8 (Motor mounting position: Top/Parallel, In-line)

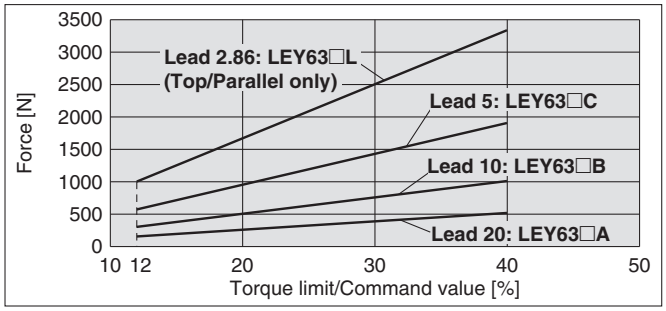

Torque limit/Command value [%]	Duty ratio [%]	Continuous pushing time [minute]
20 or less	100	—
24	60	1.5
32	30	0.5
40	20	0.16

Graph of Allowable Lateral Load on the Rod End (Guide)

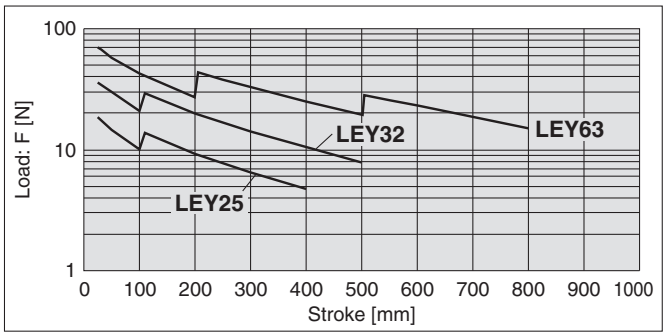

[Stroke] = [Product stroke] + [Distance from the rod end to the centre of gravity of the workpiece]

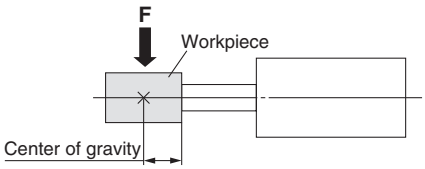

Rod Displacement: δ [mm]

Size \ Stroke	30	50	100	150	200	250	300	350	400	450	500	600	700	800
25	±0.3	±0.4	±0.7	±0.7	±0.9	±1.1	±1.3	±1.5	±1.7	—	—	—	—	—
32	±0.3	±0.4	±0.7	±0.6	±0.8	±1.0	±1.1	±1.3	±1.5	±1.7	±1.8	—	—	—
63	—	±0.5	±0.7	±0.9	±1.2	±1.1	±1.3	±1.5	±1.7	±1.9	±2.1	±1.7	±2.0	±2.2

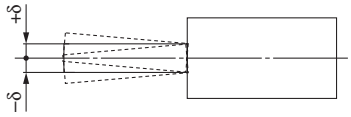

Non-rotating Accuracy of Rod

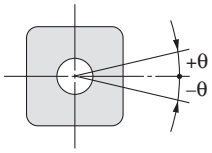

Size	Non-rotating accuracy θ
25	±0.8°
32	±0.7°
63	±0.6°

∗ Avoid using the electric actuator in such a way that rotational torque would be applied to the piston rod.
This may cause the deformation of the non-rotating guide, abnormal auto switch responses, play in the internal guide, or an increase in the sliding resistance.

Model Selection

Size 25, 32, 63

LEY Series ▸p. 87 LECS□ Series ▸p. 69, 79
LEY-X5 Series ▸p. 169 25A-LEY Series ▸p. 183

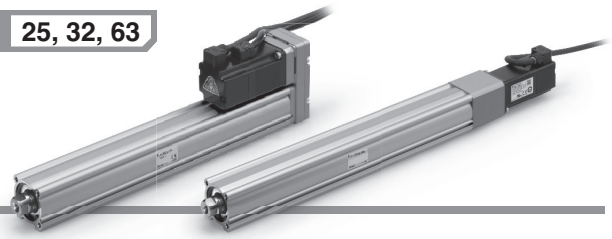

Selection Procedure

Positioning Control Selection Procedure

Step 1 Check the work load–speed. (Vertical transfer) → **Step 2** Check the cycle time.

Selection Example

Operating conditions

- Workpiece mass: 16 [kg]
- Speed: 300 [mm/s]
- Acceleration/Deceleration: 5000 [mm/s²]
- Stroke: 300 [mm]
- Workpiece mounting condition: Vertical upward / downward transfer

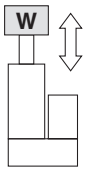

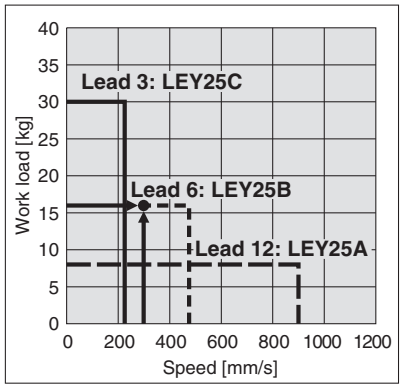

<Speed–Vertical work load graph> (LEY25)

Step 1 **Check the work load–speed. <Speed–Vertical work load graph>**

Select the target model based on the workpiece mass and speed with reference to the <Speed–Vertical work load graph>.

Selection example) The **LEY25B** is temporarily selected based on the graph shown on the right side.

* It is necessary to mount a guide outside the actuator when used for horizontal transfer. When selecting the target model, refer to the horizontal work load in the specifications on pages 89 and 90 and the precautions.

The regenerative resistor may be necessary. Refer to pages 50 and 51 for "Conditions for Regenerative Resistor (Guide)."

Step 2 **Check the cycle time.**

Calculate the cycle time using the following calculation method.

- Cycle time T can be found from the following equation.

$$T = T1 + T2 + T3 + T4 \text{ [s]}$$

- T1: Acceleration time and T3: Deceleration time can be obtained by the following equation.

$$T1 = V/a1 \text{ [s]} \qquad T3 = V/a2 \text{ [s]}$$

- T2: Constant speed time can be found from the following equation.

$$T2 = \frac{L - 0.5 \cdot V \cdot (T1 + T3)}{V} \text{ [s]}$$

- T4: Settling time varies depending on the motor type and load. The value below is recommended.

$$T4 = 0.05 \text{ [s]}$$

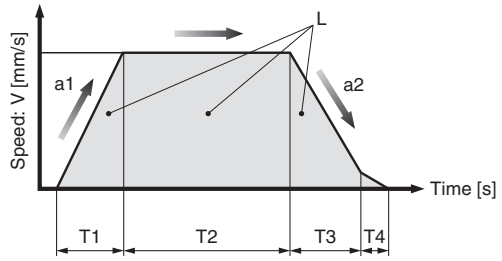

L : Stroke [mm] ··· (Operating condition)
V : Speed [mm/s] ··· (Operating condition)
a1: Acceleration [mm/s²] ··· (Operating condition)
a2: Deceleration [mm/s²] ··· (Operating condition)

T1: Acceleration time [s] ··· Time until reaching the set speed
T2: Constant speed time [s] ··· Time while the actuator is operating at a constant speed
T3: Deceleration time [s] ··· Time from the beginning of the constant speed operation to stop
T4: Settling time [s] ··· Time until positioning is completed

Calculation example)
T1 to T4 can be calculated as follows.

$T1 = V/a1 = 300/5000 = 0.06$ [s], $T3 = V/a2 = 300/5000 = 0.06$ [s]

$$T2 = \frac{L - 0.5 \cdot V \cdot (T1 + T3)}{V} = \frac{300 - 0.5 \cdot 300 \cdot (0.06 + 0.06)}{300} = 0.94 \text{ [s]}$$

$T4 = 0.05$ [s]

Therefore, the cycle time can be obtained as follows.
$T = T1 + T2 + T3 + T4 = 0.06 + 0.94 + 0.06 + 0.05 =$ **1.11 [s]**

Based on the above calculation result, the LEY25V6B-300 is selected.

Selection Procedure

Pushing Control Selection Procedure

Step 1 Check the duty ratio. → **Step 2** Check the force. → **Step 3** Check the lateral load on the rod end.

∗ The duty ratio is a ratio of the operation time in one cycle.

Selection Example

Operating conditions

- Mounting condition: Horizontal (pushing)
- Jig weight: 0.5 [kg]
- Force: 255 [N]
- Duty ratio: 60 [%]
- Pushing speed: 35 [mm/s]
- Stroke: 300 [mm]

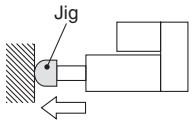

Step 1 **Check the duty ratio.**
<Conversion table of pushing force–duty ratio>

Select the [Pushing force] from the duty ratio with reference to the <Conversion table of pushing force–duty ratio>.

Selection example)
Based on the table below,
- Duty ratio: 60 [%]

Therefore, Torque limit/command value will be 90 [%].

<Conversion table of pushing force–duty ratio>
(LEY25/AC Servo motor)

Set value of pushing force [%]	Duty ratio [%]	Continuous pushing time [minute]
75 or less	100	—
90	60	1.5

∗ [Set value of pushing force] is one of the data input to the driver.
∗ [Continuous pushing time] is the time that the actuator can continuously keep pushing.

Step 2 **Check the pushing force. <Force conversion graph>**

Select the target model based on the torque limit/command value and pushing force with reference to the <Force conversion graph>.

Selection example)
Based on the graph shown on the right side,
- Torque limit/Command value: 90 [%]
- Pushing force: 255 [N]

Therefore, the **LEY25B** is temporarily selected.

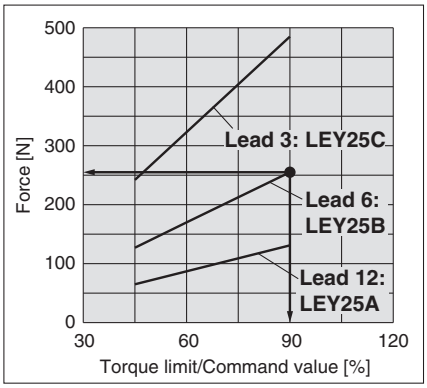

<Force conversion graph>
(LEY25)

Step 3 **Check the lateral load on the rod end.**
<Graph of allowable lateral load on the rod end>

Confirm the allowable lateral load on the rod end of the actuator: LEY25B, which has been selected temporarily with reference to the <Graph of allowable lateral load on the rod end>.

Selection example)
Based on the graph shown on the right side,
- Jig weight: 0.5 [kg] ≈ 5 [N]
- Product stroke: 300 [mm]

Therefore, the lateral load on the rod end is in the allowable range.

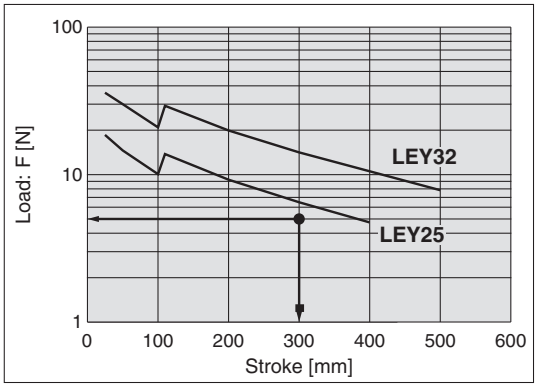

<Graph of allowable lateral load on the rod end>

Based on the above calculation result, the LEY25V6B-300 is selected.

Speed–Work Load Graph/Conditions for "Regenerative Resistor" (Guide)

LEY25□V6 (Motor mounting position: Top/Parallel, In-line)

Vertical

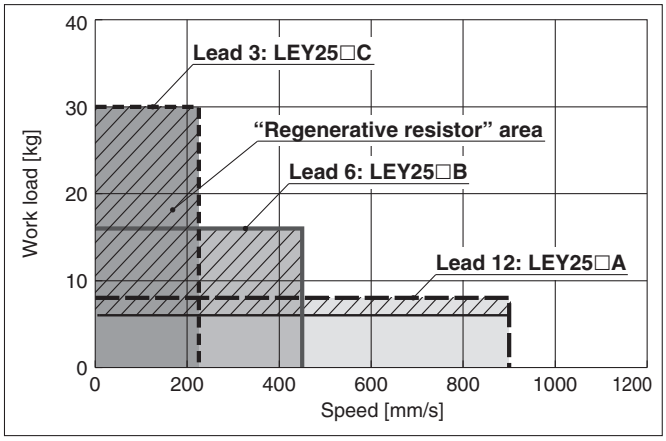

Horizontal

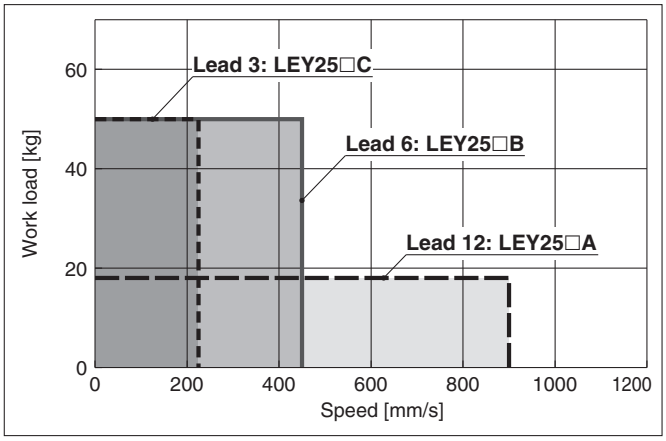

LEY32□V7 (Motor mounting position: Top/Parallel)

Vertical

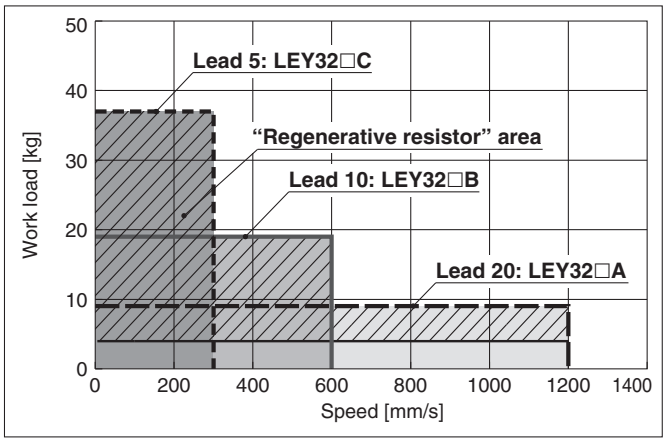

Horizontal

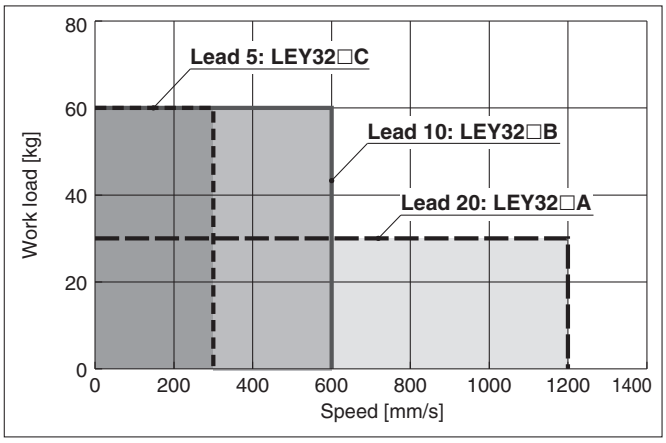

LEY32DV7 (Motor mounting position: In-line)

Vertical

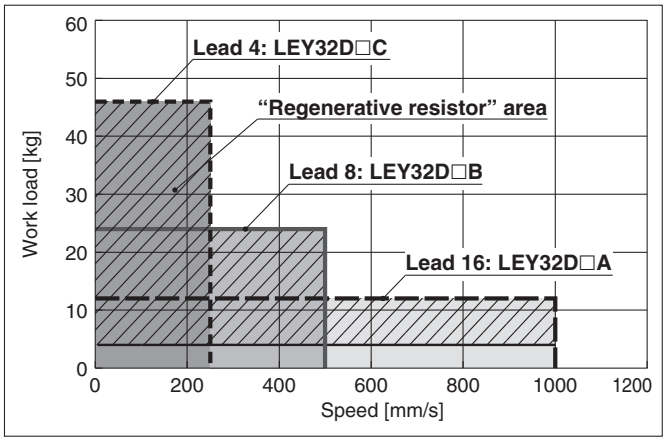

Horizontal

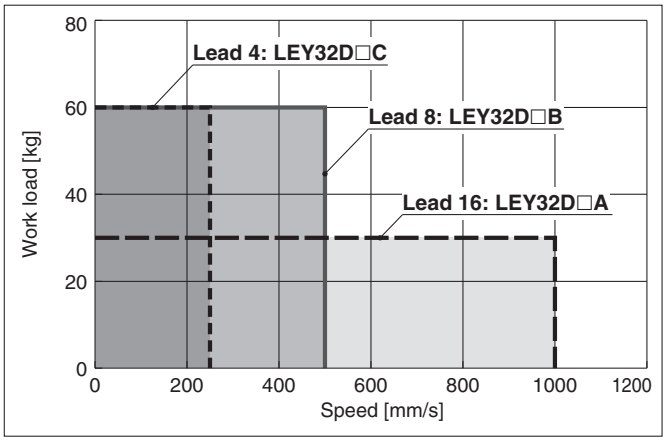

"Regenerative resistor" area

* When using the actuator in the "Regenerative resistor" area, download the "AC servo drive capacity selection program/SigmaJunmaSize+" from the SMC website. Then, calculate the necessary regenerative resistor capacity to prepare an appropriate external regenerative resistor.
* Regenerative resistor should be provided by the customer.

Applicable Motor/Driver

Model	Applicable model	
	Motor	Servopack (SMC driver)
LEY25□	SGMJV-01A3A	SGDV-R90A11□ (LECYM2-V5) SGDV-R90A21□ (LECYU2-V5)
LEY32□	SGMJV-02A3A	SGDV-1R6A11□ (LECYM2-V7) SGDV-1R6A21□ (LECYU2-V7)

Speed–Work Load Graph/Conditions for "Regenerative Resistor" (Guide)

LEY63□V8 (Motor mounting position: Top/Parallel, In-line)

Vertical

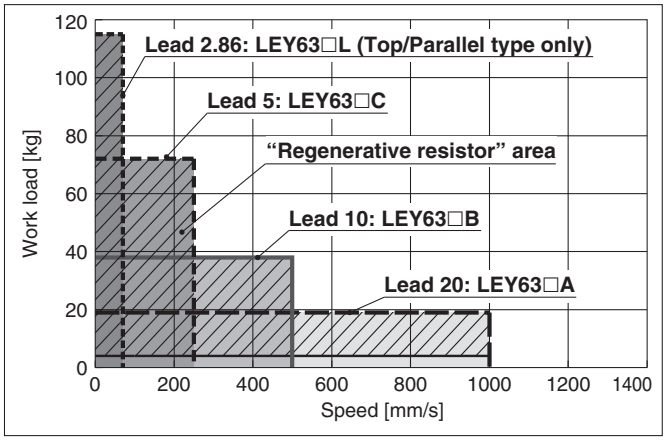

Horizontal

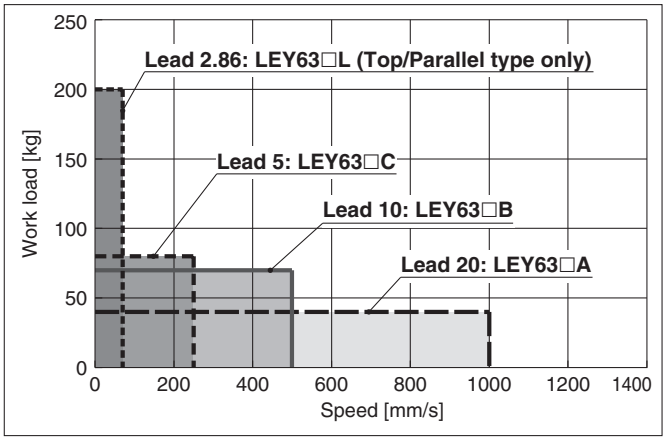

"Regenerative resistor" area

* When using the actuator in the "Regenerative resistor" area, download the "AC servo drive capacity selection program/SigmaJunmaSize+" from the SMC website. Then, calculate the necessary regenerative resistor capacity to prepare an appropriate external regenerative resistor.
* Regenerative resistor should be provided by the customer.

Applicable Motor/Driver

Product no.	Applicable model	
	Motor	Servopack (SMC driver)
LEY63□	SGMJV-04A3A	SGDV-2R8A11□ (LECYM2-V8) SGDV-2R8A21□ (LECYU2-V8)

Allowable Stroke Speed

[mm/s]

Model	AC servo motor	Lead		Stroke [mm]													
		Symbol	[mm]	Up to 30	Up to 50	Up to 100	Up to 150	Up to 200	Up to 250	Up to 300	Up to 350	Up to 400	Up to 450	Up to 500	Up to 600	Up to 700	Up to 800
LEY25□V6 Motor mounting position: Top/Parallel, In-line	100 W /□40	**A**	12	900							600		—	—	—	—	—
		B	6	450							300		—	—	—	—	—
		C	3	225							150		—	—	—	—	—
		(Motor rotation speed)		(4500 rpm)							(3000 rpm)		—	—	—	—	—
LEY32□V7 Motor mounting position: Top/Parallel	200 W /□60	**A**	20	1200									800		—	—	—
		B	10	600									400		—	—	—
		C	5	300									200		—	—	—
		(Motor rotation speed)		(3600 rpm)									(2400 rpm)		—	—	—
LEY32DV7 Motor mounting position: In-line	200 W /□60	**A**	16	1000									640		—	—	—
		B	8	500									320		—	—	—
		C	4	250									160		—	—	—
		(Motor rotation speed)		(3750 rpm)									(2400 rpm)		—	—	—
LEY63□V8 Motor mounting position: Top/Parallel, In-line	400 W /□60	**A**	20	—	1000										800	600	500
		B	10	—	500										400	300	250
		C	5	—	250										200	150	125
		(Motor rotation speed)		—	(3000 rpm)										(2400 rpm)	(1800 rpm)	(1500 rpm)
		L	2.86	—	70												
		(Motor rotation speed)		—	(1470 rpm)												

Force Conversion Graph (Guide)

LEY25□V6 (Motor mounting position: Top/Parallel, In-line)

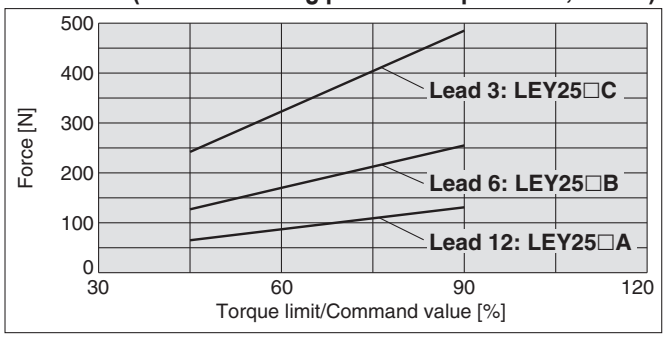

Torque limit/Command value [%]	Duty ratio [%]	Continuous pushing time [minute]
75 or less	100	—
90	60	1.5

LEY32□V7 (Motor mounting position: Top/Parallel)

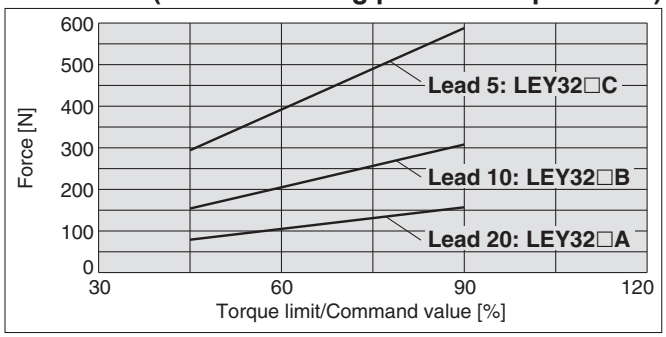

Torque limit/Command value [%]	Duty ratio [%]	Continuous pushing time [minute]
75 or less	100	—
90	60	1.5

LEY32DV7 (Motor mounting position: In-line)

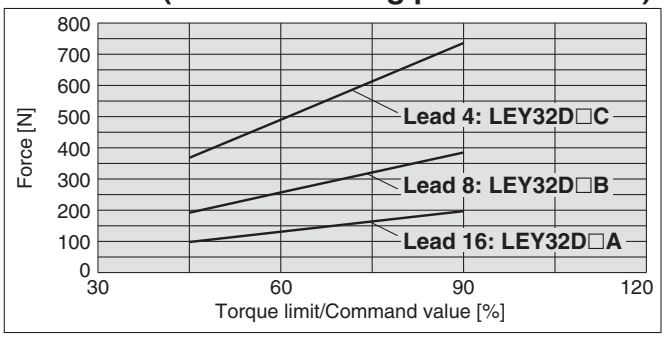

Torque limit/Command value [%]	Duty ratio [%]	Continuous pushing time [minute]
75 or less	100	—
90	60	1.5

LEY63□V8 (Motor mounting position: Top/Parallel, In-line)

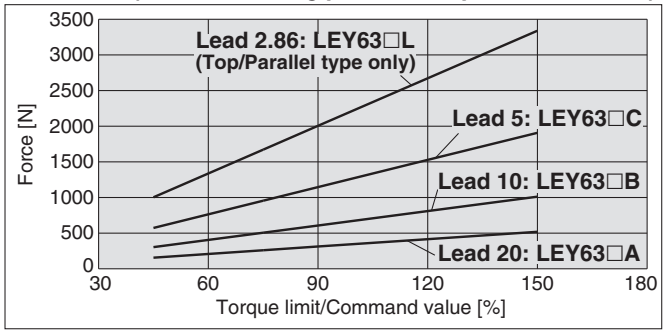

Torque limit/Command value [%]	Duty ratio [%]	Continuous pushing time [minute]
75 or less	100	—
90	60	1.5
120	30	0.5
150	20	0.16

Graph of Allowable Lateral Load on the Rod End (Guide)

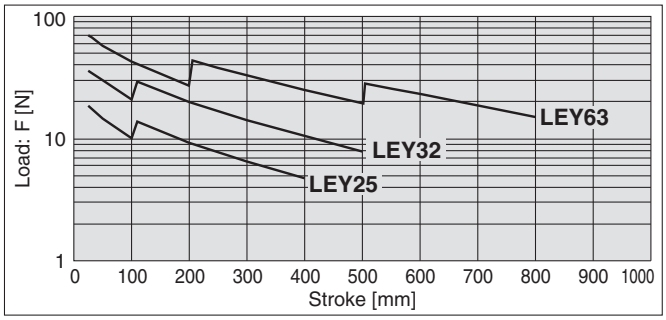

[Stroke] = [Product stroke] + [Distance from the rod end to the centre of gravity of the workpiece]

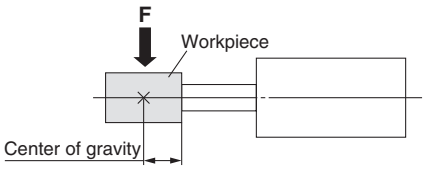

Rod Displacement: δ [mm]

Size \ Stroke	30	50	100	150	200	250	300	350	400	450	500	600	700	800
25	±0.3	±0.4	±0.7	±0.7	±0.9	±1.1	±1.3	±1.5	±1.7	—	—	—	—	—
32	±0.3	±0.4	±0.7	±0.6	±0.8	±1.0	±1.1	±1.3	±1.5	±1.7	±1.8	—	—	—
63	—	±0.5	±0.7	±0.9	±1.2	±1.1	±1.3	±1.5	±1.7	±1.9	±2.1	±1.7	±2.0	±2.2

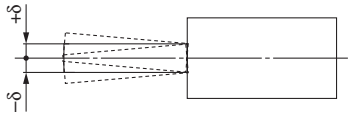

Non-rotating Accuracy of Rod

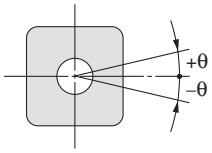

Size	Non-rotating accuracy θ
25	±0.8°
32	±0.7°
63	±0.6°

∗ Avoid using the electric actuator in such a way that rotational torque would be applied to the piston rod.
This may cause the deformation of the non-rotating guide, abnormal auto switch responses, play in the internal guide, or an increase in the sliding resistance.

Step Motor (Servo/24 VDC) Servo Motor (24 VDC)

Electric Actuator/ Rod Type

LEY Series LEY16, 25, 32, 40

RoHS

Dust-tight/Water-jet-proof ▸ p. 155 Secondary Battery Compatible ▸ p. 175

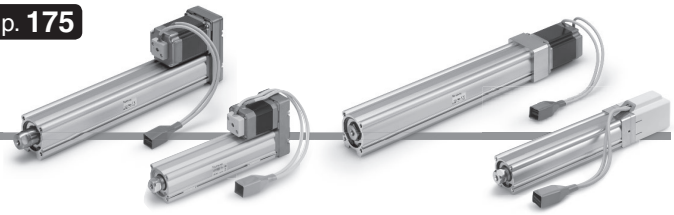

Motor mounting position: Top/Parallel Motor mounting position: In-line

How to Order

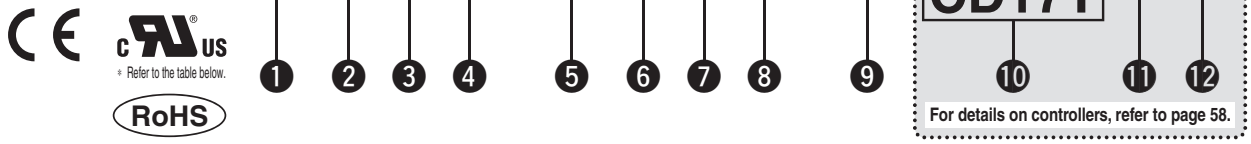

* Refer to the table below.

❶ Size

16
25
32
40

❷ Motor mounting position

—	Top mounting
R	Right side parallel
L	Left side parallel
D	In-line

❸ Motor type

Symbol	Type	Applicable size			Compatible controller/driver
		LEY16	LEY25	LEY32/40	
—	Step motor (Servo/24 VDC)	●	●	●	LECP1 LECPA JXCE1 JXC91 JXCP1 JXCD1 JXCL1
A	Servo motor (24 VDC)	●	●	—	LECA6

❹ Lead [mm]

Symbol	LEY16	LEY25	LEY32/40
A	10	12	16
B	5	6	8
C	2.5	3	4

❺ Stroke [mm]

30	30
to	to
500	500

* For details, refer to the applicable stroke table below.

❻ Motor option*2

—	Without option
C	With motor cover
B	With lock
W	With lock/motor cover

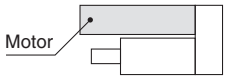

❼ Rod end thread

—	Rod end female thread
M	Rod end male thread (1 rod end nut is included.)

❽ Mounting*3

Symbol	Type	Motor mounting position	
		Top/Parallel	In-line
—	Ends tapped/Body bottom tapped*4	●	●
L	Foot	●	—
F	Rod flange*4	●*6	●
G	Head flange*4	●*7	—
D	Double clevis*5	●	—

❾ Actuator cable type/length*9

Standard cable [m]	
—	None
S1	1.5*11
S3	3*11
S5	5*11

Robotic cable [m]			
R1	1.5	RA	10*8
R3	3	RB	15*8
R5	5	RC	20*8
R8	8*8		

Applicable Stroke Table*1

●: Standard

Model \ Stroke [mm]	30	50	100	150	200	250	300	350	400	450	500	Manufacturable stroke range
LEY16	●	●	●	●	●	●	●	—	—	—	—	10 to 300
LEY25	●	●	●	●	●	●	●	●	●	—	—	15 to 400
LEY32/40	●	●	●	●	●	●	●	●	●	●	●	20 to 500

For auto switches, refer to pages 101 to 103.

LEC□ Series (For details, refer to page 57.)

6P 1 □
⑩ ⑪ ⑫

⑩ Controller/Driver type*10

—	Without controller/driver	
1N	**LECP1***11 (Programless type)	NPN
1P		PNP
AN	**LECPA***11 *13 (Pulse input type)	NPN
AP		PNP

⑪ I/O cable length*14, Communication plug

—	Without cable (Without communication plug connector)
1	1.5 m
3	3 m*15
5	5 m*15
S	Straight type communication plug connector
T	T-branch type communication plug connector

⑫ Controller/Driver mounting

—	Screw mounting
D	DIN rail*16

JXC□ Series (For details, refer to page 57.)

⑩ Controller

—	Without controller
C□1□□	With controller

C D 1 7 T

Communication protocol

E	EtherCAT®
9	EtherNet/IP™
P	PROFINET
D	DeviceNet™
L	IO-Link

For single axis

Mounting

7	Screw mounting
8*16	DIN rail

Communication plug connector for DeviceNet™*17

—	Without plug connector
S	Straight type
T	T-branch type

*1 Please consult with SMC for non-standard strokes as they are produced as special orders.
*2 When "With lock" or "With lock/motor cover" is selected for the top mounting and right/left side parallel types, the motor body will stick out from the end of the body for size 16/40 with strokes of 30 mm or less. Check for interference with workpieces before selecting a model.
*3 The mounting bracket is shipped together with the product but does not come assembled.
*4 For the horizontal cantilever mounting of the rod flange, head flange, or ends tapped types, use the actuator within the following stroke range.
·LEY25: 200 mm or less ·LEY32/40: 100 mm or less
*5 For the mounting of the double clevis type, use the actuator within the following stroke range.
·LEY16: 100 mm or less ·LEY25: 200 mm or less ·LEY32/40: 200 mm or less
*6 The rod flange type is not available for the LEY16/40 with a 30 mm stroke and motor option "With lock," "With lock/motor cover."
*7 The head flange type is not available for the LEY32/40.
*8 Produced upon receipt of order (Robotic cable only)
*9 The standard cable should only be used on fixed parts. For use on moving parts, select the robotic cable.
*10 For details on controllers/drivers and compatible motors, refer to the compatible controller/driver on the next page.
*11 Only available for the motor type "Step motor"
*12 Not compliant with CE
*13 When pulse signals are open collector, order the current limiting resistor (LEC-PA-R-□) on page 220 separately.
*14 When "Without controller/driver" is selected for controller/driver types, I/O cable cannot be selected. Refer to page 199 (For LECA6), page 213(For LECP1), or page 220 (For LECPA) if I/O cable is required.
*15 When "Pulse input type" is selected for controller/driver types, pulse input usable only with differential. Only 1.5 m cables usable with open collector
*16 The DIN rail is not included. Order it separately.
*17 Select "—" for anything other than DeviceNet™.

⚠Caution

[CE-compliant products]

① EMC compliance was tested by combining the electric actuator LEY series and the controller LEC/JXC series.
The EMC depends on the configuration of the customer's control panel and the relationship with other electrical equipment and wiring. Therefore, compliance with the EMC directive cannot be certified for SMC components incorporated into the customer's equipment under actual operating conditions. As a result, it is necessary for the customer to verify compliance with the EMC directive for the machinery and equipment as a whole.

② For the servo motor (24 VDC) specification, EMC compliance was tested by installing a noise filter set (LEC-NFA). Refer to page 199 for the noise filter set. Refer to the LECA series Operation Manual for installation.

[UL-compliant products (For the LEC series)]

When compliance with UL is required, the electric actuator and controller/driver should be used with a UL1310 Class 2 power supply.

The actuator and controller/driver are sold as a package.

Confirm that the combination of the controller/driver and actuator is correct.

<Check the following before use.>

① Check the actuator label for the model number. This number should match that of the controller/driver.

② Check that the Parallel I/O configuration matches (NPN or PNP).

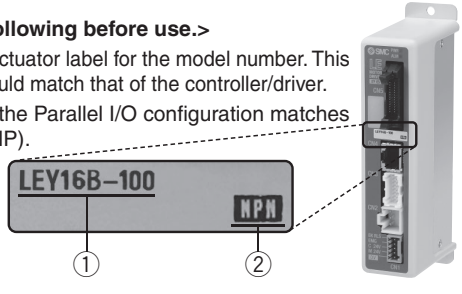

* Refer to the Operation Manual for using the products. Please download it via our website, https://www.smc.eu

Compatible Controller/Driver

LEC□ Series

Type	Step data input type	Programless type	Pulse input type
Series	**LECA6**	**LECP1**	**LECPA**
Features	Value (Step data) input Standard controller	Capable of setting up operation (step data) without using a PC or teaching box	Operation by pulse signals
Compatible motor	Servo motor (24 VDC)	Servo motor (Servo/24 VDC)	
Max. number of step data	64 points	14 points	—
Power supply voltage	24 VDC		
Reference page	191	207	214

JXC□ Series

Type	EtherCAT® direct input type	EtherNet/IP™ direct input type	PROFINET direct input type	DeviceNet™ direct input type	IO-Link direct input type
Series	**JXCE1**	**JXC91**	**JXCP1**	**JXCD1**	**JXCL1**
Features	EtherCAT® direct input	EtherNet/IP™ direct input	PROFINET direct input	DeviceNet™ direct input	IO-Link direct input
Compatible motor	Step motor (Servo/24 VDC)				
Max. number of step data	64 points				
Power supply voltage	24 VDC				
Reference page	224				

Specifications

Step Motor (Servo/24 VDC)

Model				LEY16			LEY25			LEY32			LEY40		
Actuator specifications	Work load [kg]*1	Horizontal (LECP1, JXC□1)	(3000 [mm/s²])	6	17	30	20	40	60	30	45	60	50	60	80
			(2000 [mm/s²])	10	23	35	30	55	70	40	60	80	60	70	90
		Horizontal (LECPA, JXC□2/3)	(3000 [mm/s²])	4	11	20	12	30	30	20	40	40	30	60	60
			(2000 [mm/s²])	6	17	30	18	50	50	30	60	60	—	—	—
		Vertical	(3000 [mm/s²])	2	4	8	8	16	30	11	22	43	13	27	53
	Pushing force [N]*2 *3 *4			14 to 38	27 to 74	51 to 141	63 to 122	126 to 238	232 to 452	80 to 189	156 to 370	296 to 707	132 to 283	266 to 553	562 to 1058
	Speed [mm/s]*4	LECP1/ JXC□1		15 to 500	8 to 250	4 to 125	18 to 500	9 to 250	5 to 125	24 to 500	12 to 300	6 to 150	24 to 500	12 to 350	6 to 175
		LECPA/JXC□2/3									12 to 250	6 to 125	24 to 300	12 to 150	6 to 75
	Max. acceleration/deceleration [mm/s²]			3000											
	Pushing speed [mm/s]*5			50 or less			35 or less			30 or less			30 or less		
	Positioning repeatability [mm]			±0.02											
	Lost motion [mm]*6			0.1 or less											
	Screw lead [mm]			10	5	2.5	12	6	3	16	8	4	16	8	4
	Impact/Vibration resistance [m/s²]*7			50/20											
	Actuation type			Ball screw + Belt (LEY□)/Ball screw (LEY□D)											
	Guide type			Sliding bushing (Piston rod)											
	Operating temperature range [°C]			5 to 40											
	Operating humidity range [%RH]			90 or less (No condensation)											
Electric specifications	Motor size			□28			□42			□56.4			□56.4		
	Motor type			Step motor (Servo/24 VDC)											
	Encoder			Incremental A/B phase (800 pulse/rotation)											
	Rated voltage [V]			24 VDC ±10 %											
	Power consumption [W]*8			23			40			50			50		
	Standby power consumption when operating [W]*9			16			15			48			48		
	Max. instantaneous power consumption [W]*10			43			48			104			106		
Lock unit specifications	Type*11			Non-magnetising lock											
	Holding force [N]			20	39	78	78	157	294	108	216	421	127	265	519
	Power consumption [W]*12			2.9			5			5			5		
	Rated voltage [V]			24 VDC ±10 %											

∗1 Horizontal: The maximum value of the work load. An external guide is necessary to support the load (Friction coefficient of guide: 0.1 or less). The actual work load and transfer speed change according to the condition of the external guide. Also, speed changes according to the work load. Check "Model Selection" on pages 37 and 38.
Vertical: Speed changes according to the work load. Check "Model Selection" on pages 37 and 38.
The values shown in ( ) are the acceleration/deceleration.
Set these values to be 3000 [mm/s²] or less.

∗2 Pushing force accuracy is ±20 % (F.S.).

∗3 The pushing force values for LEY16□ is 35 % to 85 %, for LEY25□ is 35 % to 65 %, for LEY32□ is 35 % to 85 %, and for LEY40□ is 35 % to 65 %.
The pushing force values change according to the duty ratio and pushing speed. Check "Model Selection" on page 40.

∗4 The speed and force may change depending on the cable length, load, and mounting conditions. Furthermore, if the cable length exceeds 5 m, then it will decrease by up to 10 % for each 5 m. (At 15 m: Reduced by up to 20 %)

∗5 The allowable speed for pushing operation. When push conveying a workpiece, operate at the vertical work load or less.

∗6 A reference value for correcting an error in reciprocal operation

∗7 Impact resistance: No malfunction occurred when the actuator was tested with a drop tester in both an axial direction and a perpendicular direction to the lead screw. (The test was performed with the actuator in the initial state.)
Vibration resistance: No malfunction occurred in a test ranging between 45 to 2000 Hz. The test was performed in both an axial direction and a perpendicular direction to the lead screw. (The test was performed with the actuator in the initial state.)

∗8 The power consumption (including the controller) is for when the actuator is operating.

∗9 The standby power consumption when operating (including the controller) is for when the actuator is stopped in the set position during the operation. Except during the pushing operation

∗10 The maximum instantaneous power consumption (including the controller) is for when the actuator is operating. This value can be used for the selection of the power supply.

∗11 With lock only

∗12 For an actuator with lock, add the power consumption for the lock.

Specifications

Servo Motor (24 VDC)

	Model		LEY16□A			LEY25□A		
Actuator specifications	Work load [kg]*1	Horizontal (3000 [mm/s²])	3	6	12	7	15	30
		Vertical (3000 [mm/s²])	2	4	8	3	6	12
	Pushing force [N]*2 *3		16 to 30	30 to 58	57 to 111	18 to 35	37 to 72	66 to 130
	Speed [mm/s]		1 to 500	1 to 250	1 to 125	2 to 500	1 to 250	1 to 125
	Max. acceleration/deceleration [mm/s²]		3000					
	Pushing speed [mm/s]*4		50 or less			35 or less		
	Positioning repeatability [mm]		±0.02					
	Lost motion [mm]*5		0.1 or less					
	Screw lead [mm]		10	5	2.5	12	6	3
	Impact/Vibration resistance [m/s²]*6		50/20					
	Actuation type		Ball screw + Belt (LEY□)/Ball screw (LEY□D)					
	Guide type		Sliding bushing (Piston rod)					
	Operating temperature range [°C]		5 to 40					
	Operating humidity range [%RH]		90 or less (No condensation)					
Electric specifications	Motor size		□28			□42		
	Motor output [W]		30			36		
	Motor type		Servo motor (24 VDC)					
	Encoder		Incremental A/B phase (800 pulse/rotation)/Z phase					
	Rated voltage [V]		24 VDC ±10 %					
	Power consumption [W]*7		40			86		
	Standby power consumption when operating [W]*8		4 (Horizontal)/6 (Vertical)			4 (Horizontal)/12 (Vertical)		
	Max. instantaneous power consumption [W]*9		59			96		
Lock unit specifications	Type*10		Non-magnetising lock					
	Holding force [N]		20	39	78	78	157	294
	Power consumption [W]*11		2.9			5		
	Rated voltage [V]		24 VDC ±10 %					

*1 Horizontal: The maximum value of the work load. An external guide is necessary to support the load (Friction coefficient of guide: 0.1 or less). The actual work load and transfer speed change according to the condition of the external guide.
Vertical: Check "Model Selection" on page 39 for details.
The values shown in ( ) are the acceleration/deceleration.
Set these values to be 3000 [mm/s²] or less.
*2 Pushing force accuracy is ±20 % (F.S.).
*3 The thrust setting values for LEY16A□ is 60 % to 95 % and for LEY25A□ is 70 % to 95 %. The pushing force values change according to the duty ratio and pushing speed. Check "Model Selection" on page 40.
*4 The allowable speed for pushing operation. When push conveying a workpiece, operate at the vertical work load or less.
*5 A reference value for correcting an error in reciprocal operation
*6 Impact resistance: No malfunction occurred when the actuator was tested with a drop tester in both an axial direction and a perpendicular direction to the lead screw. (The test was performed with the actuator in the initial state.)
Vibration resistance: No malfunction occurred in a test ranging between 45 to 2000 Hz. The test was performed in both an axial direction and a perpendicular direction to the lead screw. (The test was performed with the actuator in the initial state.)
*7 The power consumption (including the controller) is for when the actuator is operating.
*8 The standby power consumption when operating (including the controller) is for when the actuator is stopped in the set position during the operation. Except during the pushing operation
*9 The maximum instantaneous power consumption (including the controller) is for when the actuator is operating. This value can be used for the selection of the power supply.
*10 With lock only
*11 For an actuator with lock, add the power consumption for the lock.

Weight

Weight: Motor Top/Parallel Type

Series		LEY16							LEY25									LEY32										
Stroke [mm]		30	50	100	150	200	250	300	30	50	100	150	200	250	300	350	400	30	50	100	150	200	250	300	350	400	450	500
Product weight [kg]	Step motor	0.58	0.62	0.73	0.87	0.98	1.09	1.20	1.18	1.25	1.42	1.68	1.86	2.03	2.21	2.38	2.56	2.09	2.20	2.49	2.77	3.17	3.46	3.74	4.03	4.32	4.60	4.89
	Servo motor	0.58	0.62	0.73	0.87	0.98	1.09	1.20	1.14	1.21	1.38	1.64	1.82	1.99	2.17	2.34	2.52	—	—	—	—	—	—	—	—	—	—	—

Series		LEY40										
Stroke [mm]		30	50	100	150	200	250	300	350	400	450	500
Product weight [kg]	Step motor	2.39	2.50	2.79	3.07	3.47	3.76	4.04	4.33	4.62	4.90	5.19
	Servo motor	—	—	—	—	—	—	—	—	—	—	—

Weight: In-line Motor Type

Series		LEY16D							LEY25D									LEY32D										
Stroke [mm]		30	50	100	150	200	250	300	30	50	100	150	200	250	300	350	400	30	50	100	150	200	250	300	350	400	450	500
Product weight [kg]	Step motor	0.58	0.62	0.73	0.87	0.98	1.09	1.20	1.17	1.24	1.41	1.67	1.85	2.02	2.20	2.37	2.55	2.08	2.19	2.48	2.76	3.16	3.45	3.73	4.02	4.31	4.59	4.88
	Servo motor	0.58	0.62	0.73	0.87	0.98	1.09	1.20	1.13	1.20	1.37	1.63	1.81	1.98	2.16	2.33	2.51	—	—	—	—	—	—	—	—	—	—	—

Series		LEY40D										
Stroke [mm]		30	50	100	150	200	250	300	350	400	450	500
Product weight [kg]	Step motor	2.38	2.49	2.78	3.06	3.46	3.75	4.03	4.32	4.61	4.89	5.18
	Servo motor	—	—	—	—	—	—	—	—	—	—	—

Additional Weight

[kg]

Size		16	25	32	40
Lock		0.12	0.26	0.53	0.53
Motor cover		0.02	0.03	0.04	0.05
Lock/Motor cover		0.16	0.32	0.61	0.62
Rod end male thread	Male thread	0.01	0.03	0.03	0.03
	Nut	0.01	0.02	0.02	0.02
Foot bracket (2 sets including mounting bolt)		0.06	0.08	0.14	0.14
Rod flange (including mounting bolt)		0.13	0.17	0.20	0.20
Head flange (including mounting bolt)					
Double clevis (including pin, retaining ring, and mounting bolt)		0.08	0.16	0.22	0.22

Construction

Motor top mounting type: LEY 16 25 32 40

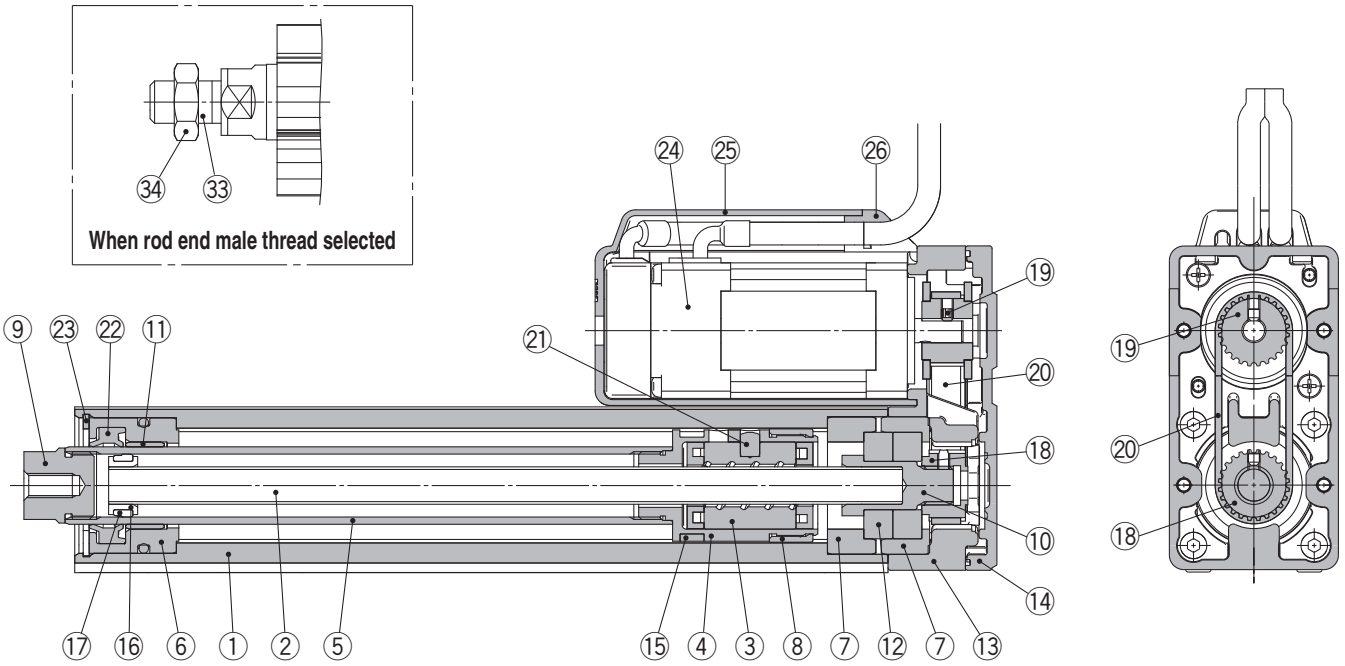

Motor top/parallel type
With lock/motor cover

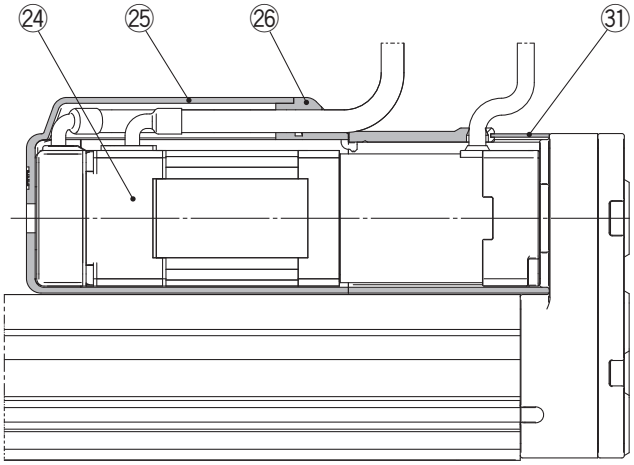

Construction

In-line motor type: LEY 16, 25, 32, 40 D

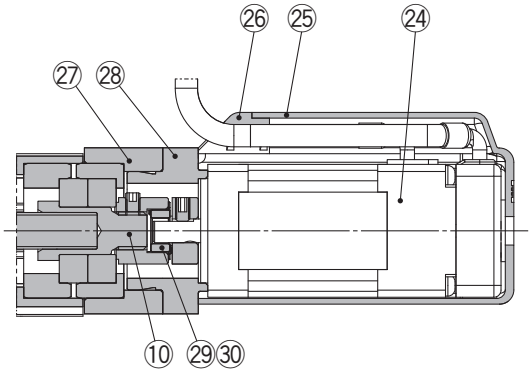

In-line motor type: With lock/motor cover

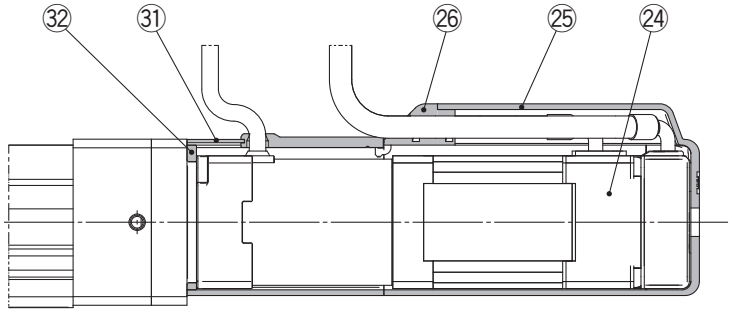

Component Parts

No.	Description	Material	Note
1	**Body**	Aluminium alloy	Anodised
2	**Ball screw shaft**	Alloy steel	
3	**Ball screw nut**	Synthetic resin/Alloy steel	
4	**Piston**	Aluminium alloy	
5	**Piston rod**	Stainless steel	Hard chrome plating
6	**Rod cover**	Aluminium alloy	
7	**Bearing holder**	Aluminium alloy	
8	**Rotation stopper**	POM	
9	**Socket**	Free cutting carbon steel	Nickel plating
10	**Connected shaft**	Free cutting carbon steel	Nickel plating
11	**Bushing**	Bearing alloy	
12	**Bearing**	—	
13	**Return box**	Aluminium die-cast	Coating
14	**Return plate**	Aluminium die-cast	Coating
15	**Magnet**	—	
16	**Wear ring holder**	Stainless steel	Stroke 101 mm or more
17	**Wear ring**	POM	Stroke 101 mm or more
18	**Screw shaft pulley**	Aluminium alloy	
19	**Motor pulley**	Aluminium alloy	
20	**Belt**	—	
21	**Parallel pin**	Stainless steel	
22	**Seal**	NBR	
23	**Retaining ring**	Steel for spring	Phosphate coated
24	**Motor**	—	
25	**Motor cover**	Synthetic resin	Only "With motor cover"
26	**Grommet**	Synthetic resin	Only "With motor cover"
27	**Motor block**	Aluminium alloy	Anodised
28	**Motor adapter**	Aluminium alloy	Anodised/LEY16, 25 only
29	**Hub**	Aluminium alloy	
30	**Spider**	NBR	
31	**Motor cover with lock**	Aluminium alloy	Only "With lock/motor cover"
32	**Cover support**	Aluminium alloy	Only "With lock/motor cover"
33	**Socket (Male thread)**	Free cutting carbon steel	Nickel plating
34	**Nut**	Alloy steel	Zinc chromated

Replacement Parts (Motor top/parallel only)/Belt

No.	Size	Order no.
21	**16**	LE-D-2-1
	25	LE-D-2-2
	32, 40	LE-D-2-3

Replacement Parts/Grease Pack

Applied portion	Order no.
Piston rod	GR-S-010 (10 g) GR-S-020 (20 g)

* Apply grease on the piston rod periodically.
Grease should be applied at 1 million cycles or 200 km, whichever comes first.

Dimensions: Motor Top/Parallel

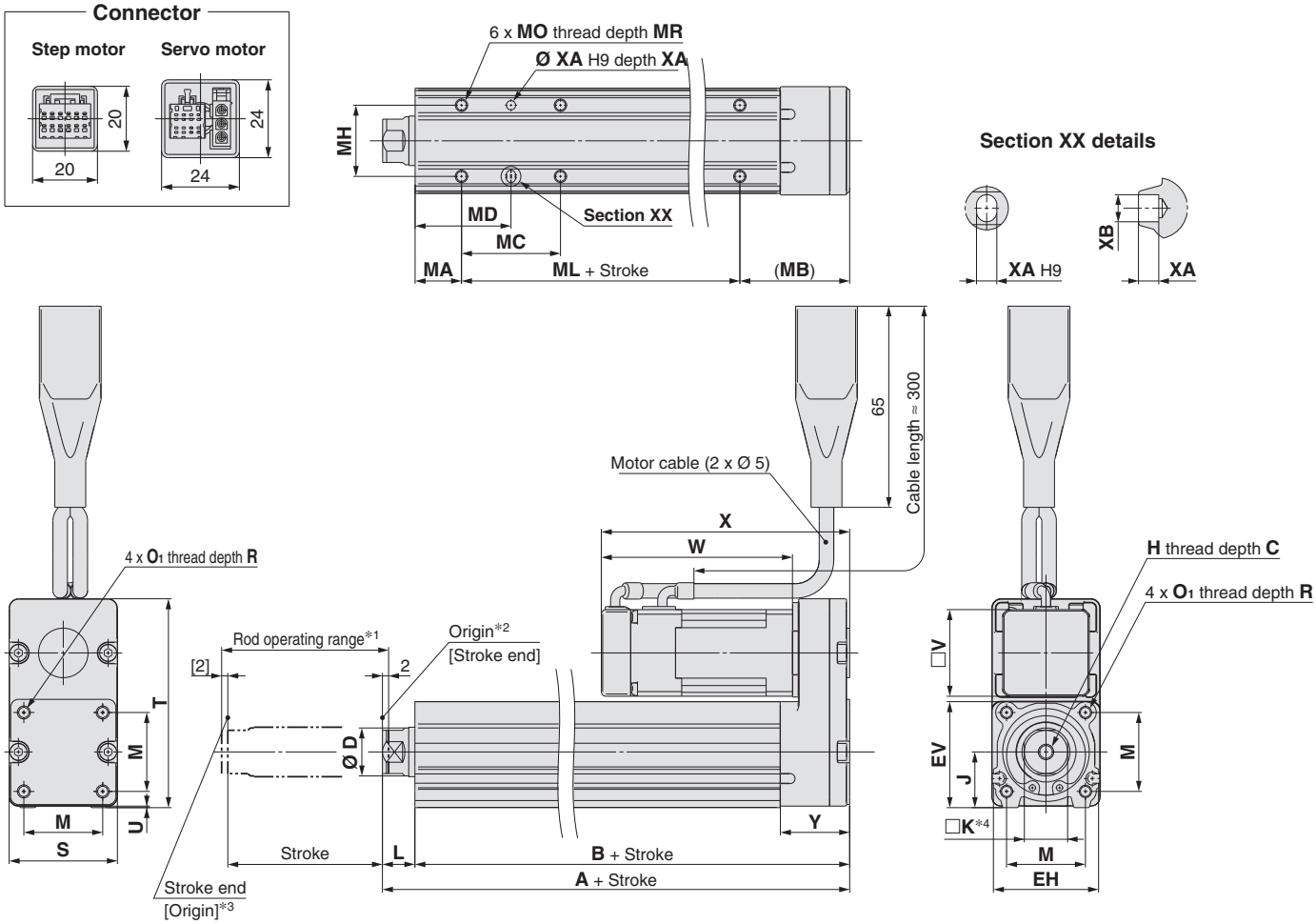

*1 Range within which the rod can move when it returns to origin
Make sure workpieces mounted on the rod do not interfere with the workpieces and facilities around the rod.
*2 Position after return to origin
*3 [ ] for when the direction of return to origin has changed
*4 The direction of rod end width across flats (□K) differs depending on the products.

[mm]

Size	Stroke range [mm]	A	B	C	D	EH	EV	H	J	K	L	M	O1	R	S	T	U	V	Step motor W	Step motor X	Servo motor W	Servo motor X	Y
16	10 to 100	101	90.5	10	16	34	34.3	M5 x 0.8	18	14	10.5	25.5	M4 x 0.7	7	35	67.5	0.5	28	61.8	80.3	62.5	81	22.5
	101 to 300	121	110.5																				
25	15 to 100	130.5	116	13	20	44	45.5	M8 x 1.25	24	17	14.5	34	M5 x 0.8	8	46	92	1	42	63.4	85.4	59.6	81.6	26.5
	101 to 400	155.5	141																				
32	20 to 100	148.5	130	13	25	51	56.5	M8 x 1.25	31	22	18.5	40	M6 x 1.0	10	60	118	1	56.4	68.4	95.4	—	—	34
	101 to 500	178.5	160																				
40	20 to 100	148.5	130	13	25	51	56.5	M8 x 1.25	31	22	18.5	40	M6 x 1.0	10	60	118	1	56.4	90.4	117.4	—	—	34
	101 to 500	178.5	160																				

Body Bottom Tapped

[mm]

Size	Stroke range [mm]	MA	MB	MC	MD	MH	ML	MO	MR	XA	XB
16	10 to 39	15	35.5	17	23.5	23	40	M4 x 0.7	5.5	3	4
	40 to 100			32	31						
	101 to 300			62	46		60				
25	15 to 39	20	46	24	32	29	50	M5 x 0.8	6.5	4	5
	40 to 100			42	41						
	101 to 124						75				
	125 to 200			59	49.5						
	201 to 400			76	58						
32 40	20 to 39	25	55	22	36	30	50	M6 x 1	8.5	5	6
	40 to 100			36	43						
	101 to 124						80				
	125 to 200			53	51.5						
	201 to 500			70	60						

Dimensions: Motor Top/Parallel

Motor left side parallel type: LEY16/25/32/40L

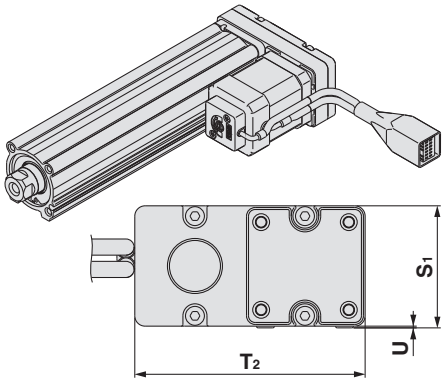

Motor right side parallel type: LEY16/25/32/40R

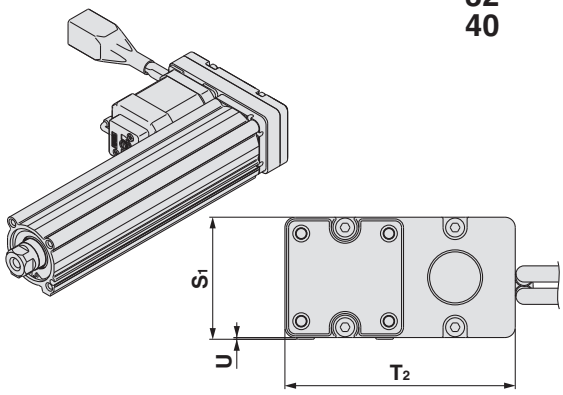

[mm]

Size	S_1	T_2	U
16	35.5	67	0.5
25	47	91	1
32, 40	61	117	1

∗ When the motor is mounted on the left or right side in parallel, the groove for auto switch on the side to which the motor is mounted is hidden.

With motor cover: LEY16/25/32/40□□A/B/C-□C

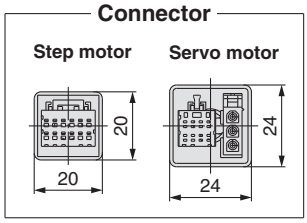

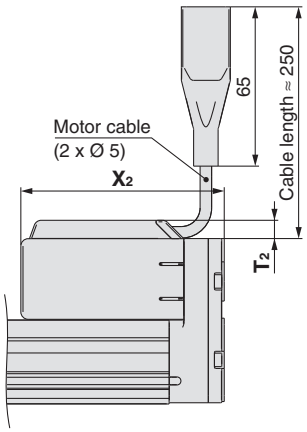

[mm]

Size	T_2	X_2
16	7.5	83
25	7.5	88.5
32	7.5	98.5
40	7.5	120.5

Motor cover material: Synthetic resin

With lock: LEY16/25/32/40□□A/B/C-□B

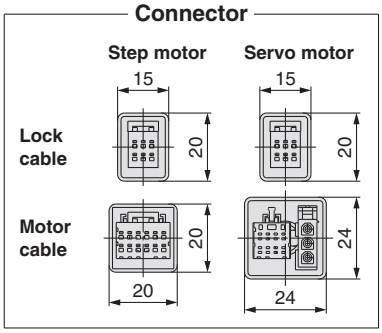

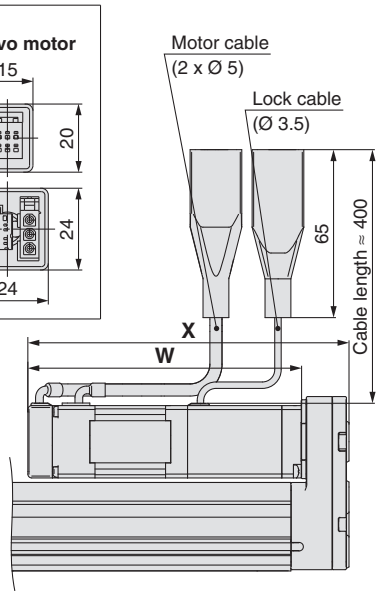

[mm]

Size	Step motor		Servo motor	
	W	X	W	X
16	103.3	121.8	104.0	122.5
25	103.9	125.9	100.1	122.1
32	111.4	138.4	—	—
40	133.4	160.4	—	—

With lock/motor cover: LEY16/25/32/40□□A/B/C-□W

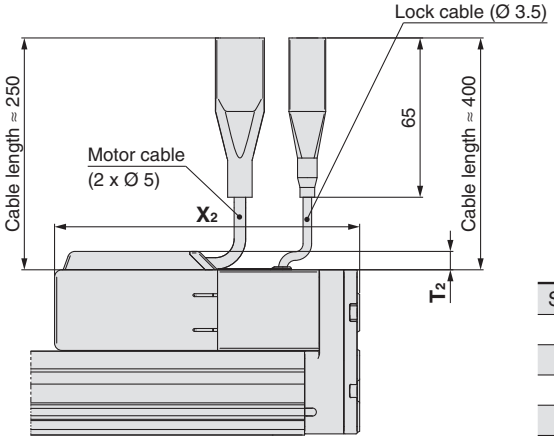

[mm]

Size	T_2	X_2
16	7.5	124.5
25	7.5	129
32	7.5	141.5
40	7.5	163.5

Dimensions: In-line Motor

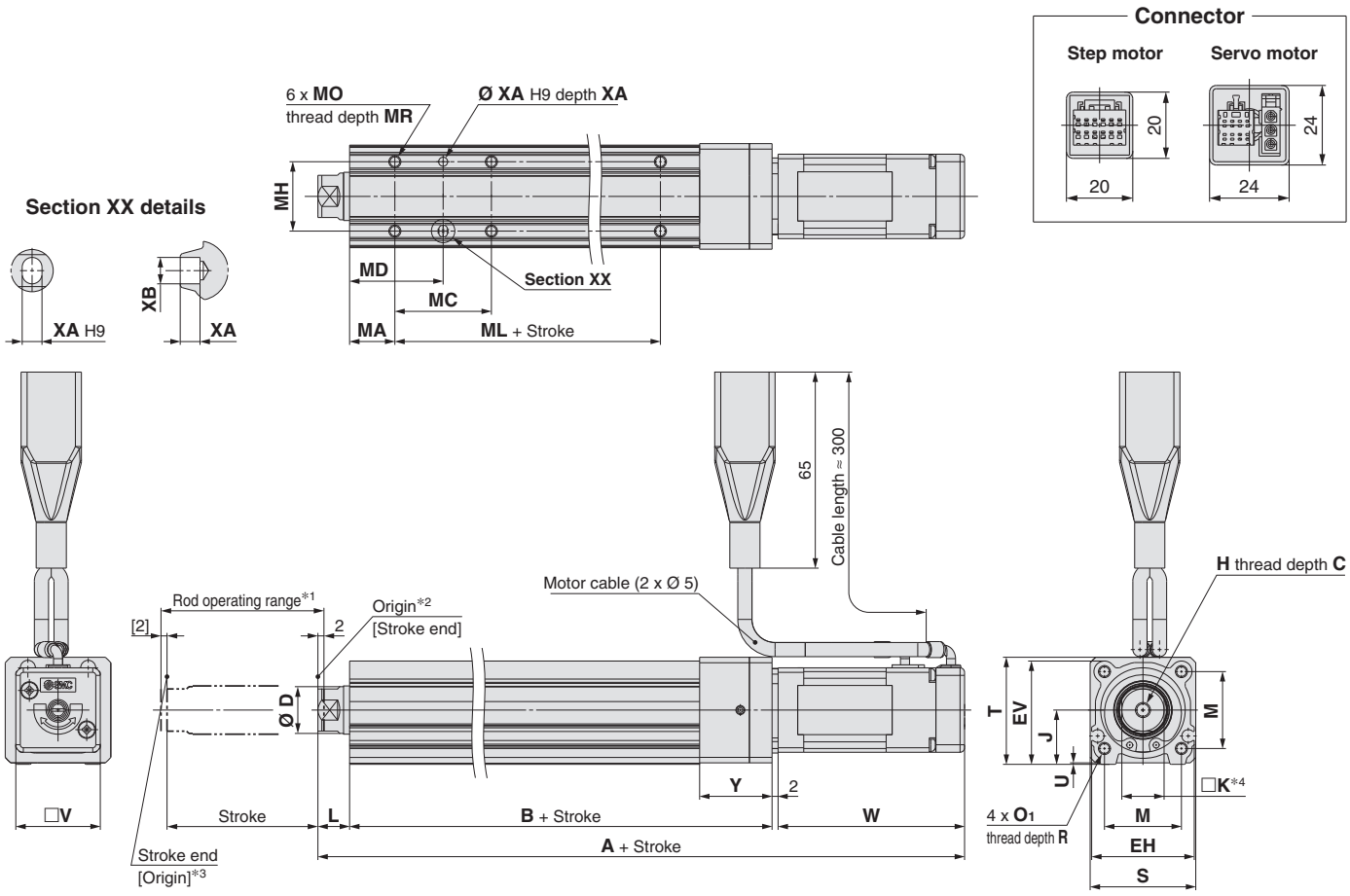

∗1 Range within which the rod can move when it returns to origin
Make sure workpieces mounted on the rod do not interfere with the workpieces and facilities around the rod.
∗2 Position after return to origin
∗3 [ ] for when the direction of return to origin has changed
∗4 The direction of rod end width across flats (□K) differs depending on the products.

[mm]

Size	Stroke range [mm]	Step motor	Servo motor	B	C	D	EH	EV	H	J	K	L	M	O_1	R	S	T	U	V	Step motor	Servo motor	Y
		A																		W		
16	10 to 100	166.3	167	92	10	16	34	34.3	M5 x 0.8	18	14	10.5	25.5	M4 x 0.7	7	35	35.5	0.5	28	61.8	62.5	24
	101 to 300	186.3	187	112																		
25	15 to 100	195.4	191.6	115.5	13	20	44	45.5	M8 x 1.25	24	17	14.5	34	M5 x 0.8	8	45	46.5	1.5	42	63.4	59.6	26
	101 to 400	220.4	216.6	140.5																		
32	20 to 100	216.9	—	128	13	25	51	56.5	M8 x 1.25	31	22	18.5	40	M6 x 1	10	60	61	1	56.4	68.4	—	32
	101 to 500	246.9	—	158																		
40	20 to 100	238.9	—	128	13	25	51	56.5	M8 x 1.25	31	22	18.5	40	M6 x 1	10	60	61	1	56.4	90.4	—	32
	101 to 500	268.9	—	158																		

Body Bottom Tapped

[mm]

Size	Stroke range [mm]	MA	MC	MD	MH	ML	MO	MR	XA	XB
16	10 to 39	15	17	23.5	23	40	M4 x 0.7	5.5	3	4
	40 to 100		32	31						
	101 to 300		62	46		60				
25	15 to 39	20	24	32	29	50	M5 x 0.8	6.5	4	5
	40 to 100		42	41						
	101 to 124					75				
	125 to 200		59	49.5						
	201 to 400		76	58						
32 40	20 to 39	25	22	36	30	50	M6 x 1	8.5	5	6
	40 to 100		36	43						
	101 to 124					80				
	125 to 200		53	51.5						
	201 to 500		70	60						

Dimensions: In-line Motor

With motor cover: LEY16/25/32/40 D□ A B-□C

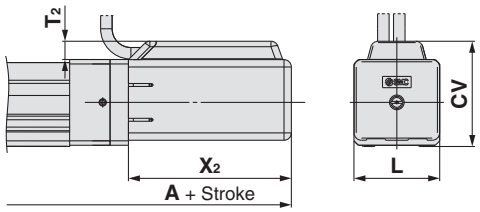

[mm]

Size	Stroke range	A	T2	X2	L	CV
16	100st or less	169	7.5	66.5	35	43
	101st or more, 200st or less	189				
25	100st or less	198.5	7.5	68.5	46	54.5
	101st or more, 400st or less	223.5				
32	100st or less	220	7.5	73.5	60	68.5
	101st or more, 500st or less	250				
40	100st or less	242	7.5	95.5	60	68.5
	101st or more, 500st or less	272				

With lock: LEY16/25/32/40 D□ A B-□C B

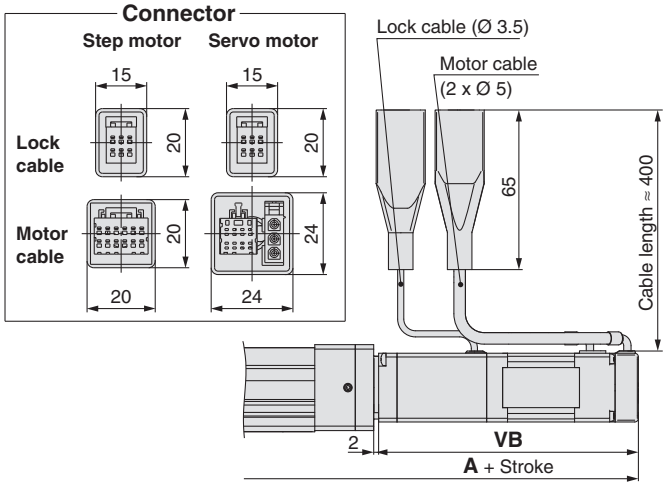

[mm]

Size	Stroke range	Step motor A	Servo motor A	Step motor VB	Servo motor VB
16	100st or less	207.8	208.5	103.3	104
	101st or more, 200st or less	227.8	228.5		
25	100st or less	235.9	232.1	103.9	100.1
	101st or more, 400st or less	260.9	257.1		
32	100st or less	259.9	—	111.4	—
	101st or more, 500st or less	289.9	—		
40	100st or less	281.9	—	133.4	—
	101st or more, 500st or less	311.9	—		

With lock/motor cover: LEY16/25/32/40 D□ A B-□C W

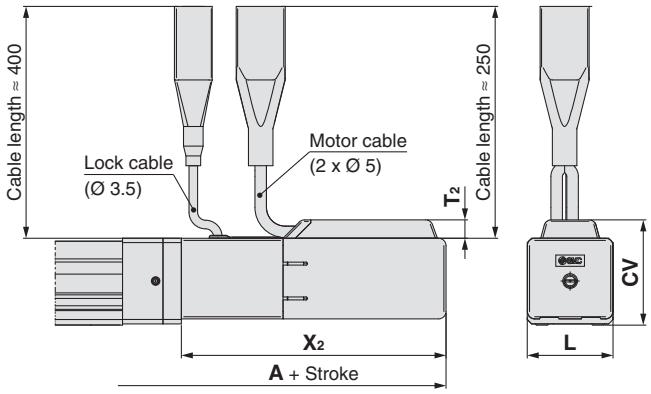

[mm]

Size	Stroke range	A	T2	X2	L	CV
16	100st or less	210.5	7.5	108	35	43
	101st or more, 300st or less	230.5				
25	100st or less	239	7.5	109	46	54.4
	101st or more, 400st or less	264				
32	100st or less	263	7.5	116.5	60	68.5
	101st or more, 500st or less	293				
40	100st or less	285	7.5	138.5	60	68.5
	101st or more, 500st or less	315				

Dimensions

End male thread: LEY 16/25/32/40 □□ A/B/C-□□M

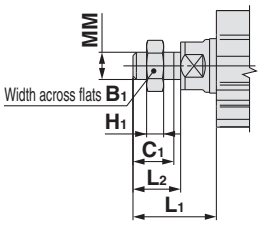

[mm]

Size	B_1	C_1	H_1	L_1	L_2	MM
16	13	12	5	24.5	14	M8 x 1.25
25	22	20.5	8	38	23.5	M14 x 1.5
32, 40	22	20.5	8	42.0	23.5	M14 x 1.5

∗ The L_1 measurement is when the unit is in the original position. At this position, 2 mm at the end.

∗ Refer to page 97 for details on the rod end nut and mounting bracket.
∗ Refer to the "Handling" precautions on pages 185 to 187 when mounting end brackets such as knuckle joint or workpieces.

Foot: LEY 16/25/32/40 □□ A/B/C-□□□L

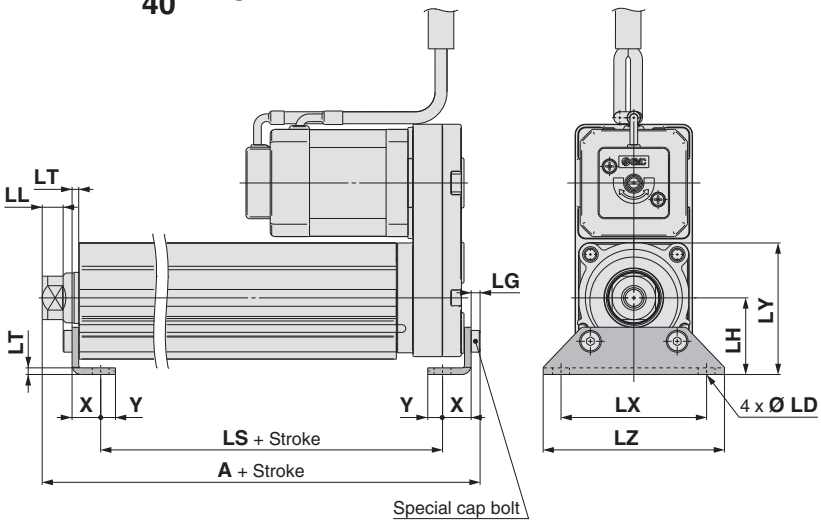

Outward mounting

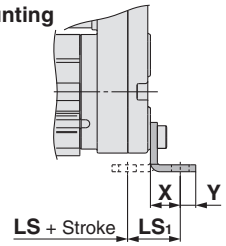

Included parts
- Foot bracket
- Body mounting bolt

Foot

[mm]

Size	Stroke range [mm]	A	LS	LS_1	LL	LD	LG	LH	LT	LX	LY	LZ	X	Y
16	10 to 100	106.1	76.7	16.1	5.4	6.6	2.8	24	2.3	48	40.3	62	9.2	5.8
	101 to 300	126.1	96.7											
25	15 to 100	136.6	98.8	19.8	8.4	6.6	3.5	30	2.6	57	51.5	71	11.2	5.8
	101 to 400	161.6	123.8											
32 **40**	20 to 100	155.7	114	19.2	11.3	6.6	4	36	3.2	76	61.5	90	11.2	7
	101 to 500	185.7	144											

Material: Carbon steel (Chromate treated)
∗ The A measurement is when the unit is in the original position. At this position, 2 mm at the end.
∗ When the motor mounting is the right or left side parallel type, the head side foot bracket should be mounted outward.

Dimensions

Rod flange: LEY16□□A/B/C-□□□F

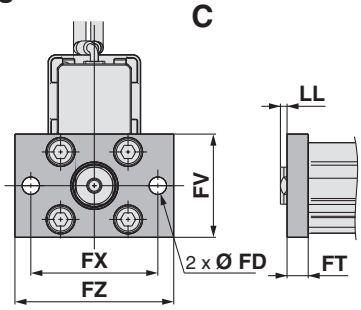

Head flange: LEY16□□A/B/C-□□□G

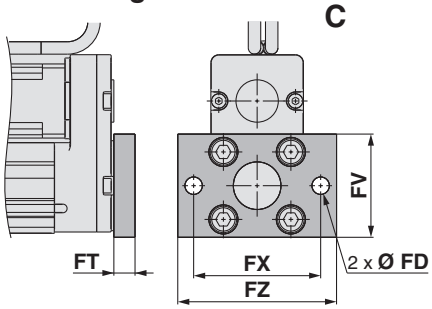

Rod flange: LEY32/40□□A/B/C-□□□F

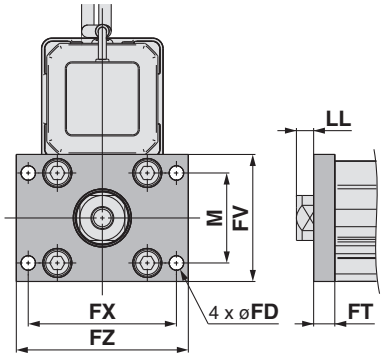

Head flange: LEY25□□A/B/C-□□□G

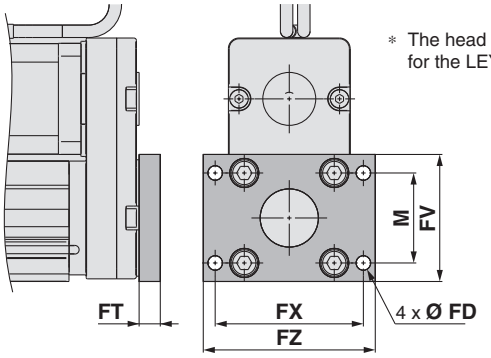

∗ The head flange type is not available for the LEY32/40.

Included parts
- Flange
- Body mounting bolt

Rod/Head Flange

[mm]

Size	FD	FT	FV	FX	FZ	LL	M
16	6.6	8	39	48	60	2.5	—
25	5.5	8	48	56	65	6.5	34
32, 40	5.5	8	54	62	72	10.5	40

Material: Carbon steel (Nickel plating)

Double clevis: LEY16□□A/B/C-□□□D

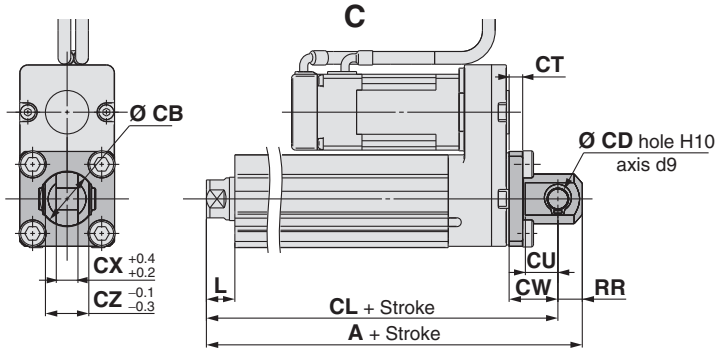

Double clevis: LEY32/40□□A/B/C-□□□D

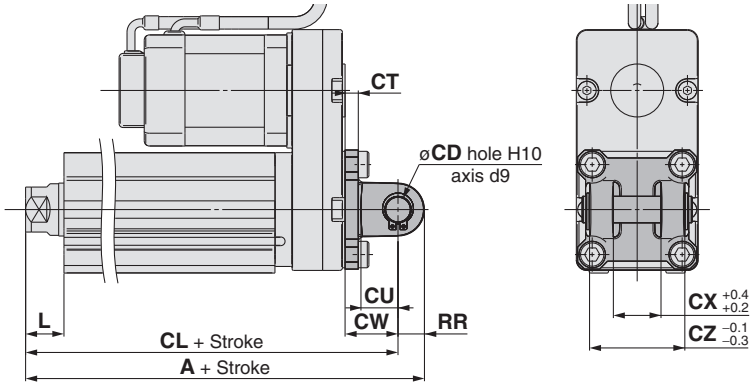

Included parts
- Double clevis
- Body mounting bolt
- Clevis pin
- Retaining ring

∗ Refer to page 97 for details on the rod end nut and mounting bracket.

Double Clevis

[mm]

Size	Stroke range [mm]	A	CL	CB	CD	CT
16	10 to 100	128	119	20	8	5
25	15 to 100	160.5	150.5	—	10	5
	101 to 200	185.5	175.5			
32	20 to 100	180.5	170.5	—	10	6
40	101 to 200	210.5	200.5			

Size	Stroke range [mm]	CU	CW	CX	CZ	L	RR
16	10 to 100	12	18	8	16	10.5	9
25	15 to 100	14	20	18	36	14.5	10
	101 to 200						
32	20 to 100	14	22	18	36	18.5	10
40	101 to 200						

Material: Cast iron (Coating)

∗ The A and CL measurements are when the unit is in the original position. At this position, 2 mm at the end.

Electric Actuator/ Rod Type

LEY Series LEY25, 32

Size 25, 32

* Refer to the table below.

Dust-tight/Water-jet-proof ▸p. 163 Secondary Battery Compatible ▸p. 181 LECY□ Series ▸p. 87

How to Order

LEY H 25 □ S2 B – 100 □ □ □ – S 2 A1 □

❶ ❷ ❸ ❹ ❺ ❻ ❼ ❽ ❾ ❿ ⓫ ⓬ ⓭

❶ Accuracy

—	Basic type
H	High-precision type

❷ Size

25
32

❸ Motor mounting position

—	Top mounting
R	Right side parallel
L	Left side parallel
D	In-line

❹ Motor type

Symbol	Type	Output [W]	Actuator size	Compatible drivers*3	UL-compliant
S2*1	AC servo motor (Incremental encoder)	100	25	LECSA□-S1	—
S3	AC servo motor (Incremental encoder)	200	32	LECSA□-S3	—
S6*1	AC servo motor (Absolute encoder)	100	25	LECSB□-S5 LECSC□-S5 LECSS□-S5	—
S7	AC servo motor (Absolute encoder)	200	32	LECSB□-S7 LECSC□-S7 LECSS□-S7	—
T6*2	AC servo motor (Absolute encoder)	100	25	LECSS2-T5	●
T7		200	32	LECSS2-T7	●

*1 For motor type S2 and S6, the compatible driver part number suffixes are S1 and S5 respectively.
*2 For motor type T6, the compatible driver part number suffix is T5.
*3 For details on the driver, refer to page 246.

❺ Lead [mm]

Symbol	LEY25	LEY32*1
A	12	16 (20)
B	6	8 (10)
C	3	4 (5)

*1 The values shown in ( ) are the leads for the size 32 top mounting, right/left side parallel types.
(Equivalent leads which include the pulley ratio [1.25:1])

❻ Stroke [mm]

30	30
to	to
500	500

* For details, refer to the applicable stroke table below.

❼ Motor option

—	Without option
B	With lock*1

*1 When "With lock" is selected for the top mounting and right/left side parallel types, the motor body will stick out from the end of the body for size 25 with strokes of 30 mm or less. Check for interference with workpieces before selecting a model.

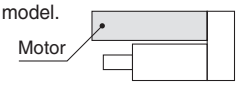

❽ Rod end thread

—	Rod end female thread
M	Rod end male thread (1 rod end nut is included.)

❾ Mounting*1

Symbol	Type	Motor mounting position	
		Top/Parallel	In-line
—	Ends tapped/ Body bottom tapped *2	●	●
L	Foot	●	—
F	Rod flange*2	●*4	●
G	Head flange*2	●*5	—
D	Double clevis*3	●	—

*1 The mounting bracket is shipped together with the product but does not come assembled.
*2 For the horizontal cantilever mounting of the rod flange, head flange, or ends tapped types, use the actuator within the following stroke range.
・LEY25: 200 mm or less ・LEY32: 100 mm or less
*3 For the mounting of the double clevis type, use the actuator within the following stroke range.
・LEY25: 200 mm or less ・LEY32: 200 mm or less
*4 The rod flange type is not available for the LEY25 with a 30 mm stroke and motor option "With lock."
*5 The head flange type is not available for the LEY32.

Applicable Stroke Table

●: Standard

Model \ Stroke [mm]	30	50	100	150	200	250	300	350	400	450	500	Manufacturable stroke range
LEY25	●	●	●	●	●	●	●	●	●	—	—	15 to 400
LEY32	●	●	●	●	●	●	●	●	●	●	●	20 to 500

* Please consult with SMC for non-standard strokes as they are produced as special orders.

For auto switches, refer to pages 101 to 103.

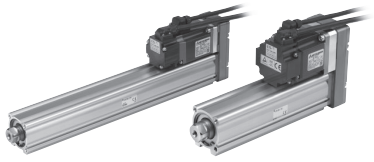

Motor mounting position: Top/Parallel

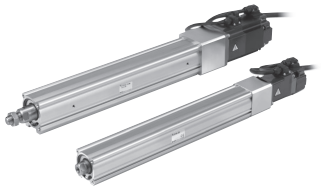

Motor mounting position: In-line

⑩ Cable type*1 *2

—	Without cable
S	Standard cable
R	Robotic cable (Flexible cable)

*1 The motor and encoder cables are included. (The lock cable is also included when the motor with lock option is selected.)
*2 Standard cable entry direction is
• Top/Parallel: (A) Axis side
• In-line: (B) Counter axis side
(Refer to page 264 for details.)

⑪ Cable length*1 [m]

—	Without cable
2	2
5	5
A	10

*1 The length of the motor, encoder, and lock cables are the same.

⑫ Driver type*1

	Compatible driver	Power supply voltage [V]	UL-compliant
—	Without driver	—	—
A1	LECSA1-S□	100 to 120	—
A2	LECSA2-S□	200 to 230	—
B1	LECSB1-S□	100 to 120	—
B2	LECSB2-S□	200 to 230	—
C1	LECSC1-S□	100 to 120	—
C2	LECSC2-S□	200 to 230	—
S1	LECSS1-S□	100 to 120	—
S2	LECSS2-S□	200 to 230	—
	LECSS2-T□	200 to 240	●

*1 When a driver type is selected, a cable is included. Select the cable type and cable length.
Example)
S2S2: Standard cable (2 m) + Driver (LECSS2)
S2 : Standard cable (2 m)
— : Without cable and driver

⑬ I/O cable length [m]*1

—	Without cable
H	Without cable (Connector only)
1	1.5

*1 When "Without driver" is selected for driver type, only "—: Without cable" can be selected.
Refer to page 265 if I/O cable is required.
(Options are shown on page 265.)

Compatible Driver

Driver type	Pulse input type /Positioning type	Pulse input type	CC-Link direct input type	SSCNET Ⅲ type	SSCNETⅢ/H type
Series	**LECSA**	**LECSB**	**LECSC**	**LECSS**	**LECSS-T**
Number of point tables	Up to 7	—	Up to 255 (2 stations occupied)	—	—
Pulse input	○	○	—	—	—
Applicable network	—	—	CC-Link	SSCNET Ⅲ	SSCNET Ⅲ/H
Control encoder	Incremental 17-bit encoder	Absolute 18-bit encoder	Absolute 18-bit encoder	Absolute 18-bit encoder	Absolute 22-bit encoder
Communication function	USB communication	USB communication, RS422 communication		USB communication	
Power supply voltage [V]	100 to 120 VAC (50/60 Hz) 200 to 230 VAC (50/60 Hz)				200 to 240 VAC (50/60 Hz)
Reference page	246				

Specifications: LECSA/LECSB/LECSC/LECSS

∗ Refer to the next page for the LECSS-T.

Model			LEY25S$^{2}_{6}$ (Top/Parallel)/LEY25DS$^{2}_{6}$ (In-line)			LEY32S$^{3}_{7}$ (Top/Parallel)			LEY32DS$^{3}_{7}$ (In-line)		
Actuator specifications	Work load [kg]	Horizontal∗1	18	50	50	30	60	60	30	60	60
		Vertical	8	16	30	9	19	37	12	24	46
	Force [N]∗2 (Set value: 15 to 30 %)		65 to 131	127 to 255	242 to 485	79 to 157	154 to 308	294 to 588	98 to 197	192 to 385	368 to 736
	Max.∗3 speed [mm/s] — Stroke range	Up to 300	900	450	225	1200	600	300	1000	500	250
		305 to 400	600	300	150						
		405 to 500	—	—	—	800	400	200	640	320	160
	Pushing speed [mm/s]∗4		35 or less			30 or less			30 or less		
	Max. acceleration/deceleration [mm/s²]		5000			5000					
	Positioning repeatability [mm]	Basic type	±0.02								
		High-precision type	±0.01								
	Lost motion [mm]∗5	Basic type	0.1 or less								
		High-precision type	0.05 or less								
	Lead [mm] (including pulley ratio)		12	6	3	20	10	5	16	8	4
	Impact/Vibration resistance [m/s²]∗6		50/20			50/20					
	Actuation type		Ball screw + Belt (LEY□)/Ball screw (LEY□D)			Ball screw + Belt [1.25:1]			Ball screw		
	Guide type		Sliding bushing (Piston rod)			Sliding bushing (Piston rod)					
	Operating temperature range [°C]		5 to 40			5 to 40					
	Operating humidity range [%RH]		90 or less (No condensation)			90 or less (No condensation)					
	Regeneration option		May be required depending on speed and work load (Refer to pages 43 and 44.)								
Electric specifications	Motor output/Size		100 W/□40			200 W/□60					
	Motor type		AC servo motor (100/200 VAC)			AC servo motor (100/200 VAC)					
	Encoder		Motor type S2, S3: Incremental 17-bit encoder (Resolution: 131072 p/rev) Motor type S6, S7: Absolute 18-bit encoder (Resolution: 262144 p/rev)								
	Power consumption [W]∗7	Horizontal	45			65			65		
		Vertical	145			175			175		
	Standby power consumption when operating [W]∗8	Horizontal	2			2			2		
		Vertical	8			8			8		
	Max. instantaneous power consumption [W]∗9		445			724			724		
Lock unit specifications	Type∗10		Non-magnetising lock								
	Holding force [N]		131	255	485	157	308	588	197	385	736
	Power consumption [W] at 20 °C∗11		6.3			7.9			7.9		
	Rated voltage [V]		24 VDC $^{0}_{-10\ \%}$								

∗1 This is the maximum value of the horizontal work load. An external guide is necessary to support the load. The actual work load changes according to the condition of the external guide. Confirm the load using the actual device.

∗2 The force setting range (set values for the driver) for the force control with the torque control mode. Set it with reference to "Force Conversion Graph" on page 45. When the control equivalent to the pushing operation of the controller LECP series is performed, select the LECSS driver and combine it with the Simple Motion (manufactured by Mitsubishi Electric Corporation) which has a pushing operation function.

∗3 The allowable speed changes according to the stroke. Set the number of rotations according to speed.

∗4 The allowable collision speed for collision with the workpiece with the torque control mode

∗5 A reference value for correcting an error in reciprocal operation

∗6 Impact resistance: No malfunction occurred when the actuator was tested with a drop tester in both an axial direction and a perpendicular direction to the lead screw. (The test was performed with the actuator in the initial state.)
Vibration resistance: No malfunction occurred in a test ranging between 45 to 2000 Hz. The test was performed in both an axial direction and a perpendicular direction to the lead screw. (The test was performed with the actuator in the initial state.)

∗7 The power consumption (including the driver) is for when the actuator is operating.

∗8 The standby power consumption when operating (including the driver) is for when the actuator is stopped in the set position during the operation.

∗9 The maximum instantaneous power consumption (including the driver) is for when the actuator is operating.

∗10 Only when motor option "With lock" is selected

∗11 For an actuator with lock, add the power consumption for the lock.

Weight

Product Weight

[kg]

Series		LEY25S$^{2}_{6}$ (Motor mounting position: Top/Parallel)									LEY32S$^{3}_{7}$ (Motor mounting position: Top/Parallel)										
Stroke [mm]		30	50	100	150	200	250	300	350	400	30	50	100	150	200	250	300	350	400	450	500
Motor type	Incremental encoder	1.31	1.38	1.55	1.81	1.99	2.16	2.34	2.51	2.69	2.42	2.53	2.82	3.29	3.57	3.85	4.14	4.42	4.70	4.98	5.26
	Absolute encoder	1.37	1.44	1.61	1.87	2.05	2.22	2.40	2.57	2.75	2.36	2.47	2.76	3.23	3.51	3.79	4.08	4.36	4.64	4.92	5.20

Series		LEY25DS$^{2}_{6}$ (Motor mounting position: In-line)									LEY32DS$^{3}_{7}$ (Motor mounting position: In-line)										
Stroke [mm]		30	50	100	150	200	250	300	350	400	30	50	100	150	200	250	300	350	400	450	500
Motor type	Incremental encoder	1.34	1.41	1.58	1.84	2.02	2.19	2.37	2.54	2.72	2.44	2.55	2.84	3.31	3.59	3.87	4.16	4.44	4.72	5.00	5.28
	Absolute encoder	1.40	1.47	1.64	1.90	2.08	2.25	2.43	2.60	2.78	2.38	2.49	2.78	3.25	3.53	3.81	4.10	4.38	4.66	4.94	5.22

Additional Weight

[kg]

Size		25	32
Lock	Incremental encoder	0.20	0.40
	Absolute encoder [S6/S7]	0.30	0.66
Rod end male thread	Male thread	0.03	0.03
	Nut	0.02	0.02
Foot bracket (2 sets including mounting bolt)		0.08	0.14
Rod flange (including mounting bolt)		0.17	0.20
Head flange (including mounting bolt)			
Double clevis (including pin, retaining ring, and mounting bolt)		0.16	0.22

Specifications: LECSS-T

Model			LEY25T6 (Top/Parallel)/LEY25DT6 (In-line)			LEY32T7 (Top/Parallel)			LEY32DT7 (In-line)		
Actuator specifications	Work load [kg]	Horizontal*1	18	50	50	30	60	60	30	60	60
		Vertical	8	16	30	9	19	37	12	24	46
	Force [N]*2 (Set value: 15 to 30 %)		65 to 131	127 to 255	242 to 485	79 to 157	154 to 308	294 to 588	98 to 197	192 to 385	368 to 736
	Max.*3 speed [mm/s] Stroke range	Up to 300	900	450	225	1200	600	300	1000	500	250
		305 to 400	600	300	150						
		405 to 500	—	—	—	800	400	200	640	320	160
	Pushing speed [mm/s]*4		35 or less			30 or less			30 or less		
	Max. acceleration/deceleration [mm/s²]		5000			5000					
	Positioning repeatability [mm]	Basic type	±0.02			±0.02					
		High-precision type	±0.01			±0.01					
	Lost motion [mm]*5	Basic type	0.1 or less								
		High-precision type	0.05 or less								
	Lead [mm] (including pulley ratio)		12	6	3	20	10	5	16	8	4
	Impact/Vibration resistance [m/s²]*6		50/20			50/20					
	Actuation type		Ball screw + Belt (LEY□)/Ball screw (LEY□D)			Ball screw + Belt [1.25:1]			Ball screw		
	Guide type		Sliding bushing (Piston rod)			Sliding bushing (Piston rod)					
	Operating temperature range [°C]		5 to 40			5 to 40					
	Operating humidity range [%RH]		90 or less (No condensation)			90 or less (No condensation)					
	Regeneration option		May be required depending on speed and work load (Refer to pages 45 and 46.)								
Electric specifications	Motor output/Size		100 W/□40			200 W/□60					
	Motor type		AC servo motor (200 VAC)			AC servo motor (200 VAC)					
	Encoder		Motor type T6, T7: Absolute 22-bit encoder (Resolution: 4194304 p/rev)								
	Power consumption [W]*7	Horizontal	45			65			65		
		Vertical	145			175			175		
	Standby power consumption when operating [W]*8	Horizontal	2			2			2		
		Vertical	8			8			8		
	Max. instantaneous power consumption [W]*9		445			724			724		
Lock unit specifications	Type*10		Non-magnetising lock								
	Holding force [N]		131	255	485	157	308	588	197	385	736
	Power consumption [W] at 20 °C*11		6.3			7.9			7.9		
	Rated voltage [V]		24 VDC $^{0}_{-10\,\%}$								

*1 This is the maximum value of the horizontal work load. An external guide is necessary to support the load. The actual work load changes according to the condition of the external guide. Confirm the load using the actual device.
*2 The force setting range (set values for the driver) for the force control with the torque control mode. Set it with reference to "Force Conversion Graph (Guide)" on page 48. When the control equivalent to the pushing operation of the controller LECP series is performed, combine the Simple Motion (manufactured by Mitsubishi Electric Corporation) which has a pushing operation function.
*3 The allowable speed changes according to the stroke.
*4 The allowable collision speed for collision with the workpiece with the torque control mode
*5 A reference value for correcting an error in reciprocal operation
*6 Impact resistance: No malfunction occurred when the actuator was tested with a drop tester in both an axial direction and a perpendicular direction to the lead screw. (The test was performed with the actuator in the initial state.)
Vibration resistance: No malfunction occurred in a test ranging between 45 to 2000 Hz. The test was performed in both an axial direction and a perpendicular direction to the lead screw. (The test was performed with the actuator in the initial state.)
*7 The power consumption (including the driver) is for when the actuator is operating.
*8 The standby power consumption when operating (including the driver) is for when the actuator is stopped in the set position during the operation.
*9 The maximum instantaneous power consumption (including the driver) is for when the actuator is operating.
*10 Only when motor option "With lock" is selected
*11 For an actuator with lock, add the power consumption for the lock.

Weight

Product Weight

Series		LEY25T6 (Motor mounting position: Top/Parallel)									LEY32T7 (Motor mounting position: Top/Parallel)										
Stroke [mm]		30	50	100	150	200	250	300	350	400	30	50	100	150	200	250	300	350	400	450	500
Motor type	Absolute encoder	1.4	1.5	1.6	1.9	2.0	2.2	2.4	2.6	2.7	2.3	2.4	2.7	3.2	3.5	3.8	4.1	4.3	4.6	4.9	5.2

Series		LEY25DT6 (Motor mounting position: In-line)									LEY32DT7 (Motor mounting position: In-line)										
Stroke [mm]		30	50	100	150	200	250	300	350	400	30	50	100	150	200	250	300	350	400	450	500
Motor type	Absolute encoder	1.4	1.5	1.6	1.9	2.1	2.2	2.4	2.6	2.8	2.4	2.5	2.8	3.2	3.5	3.8	4.1	4.4	4.6	4.9	5.2

Additional Weight

Size		25	32
Lock	Absolute encoder [T6/T7]	0.3	0.4
Rod end male thread	Male thread	0.03	0.03
	Nut	0.02	0.02
Foot bracket (2 sets including mounting bolt)		0.08	0.14
Rod flange (including mounting bolt)		0.17	0.20
Head flange (including mounting bolt)			
Double clevis (including pin, retaining ring, and mounting bolt)		0.16	0.22

Construction

Motor top mounting type: LEY$^{25}_{32}$

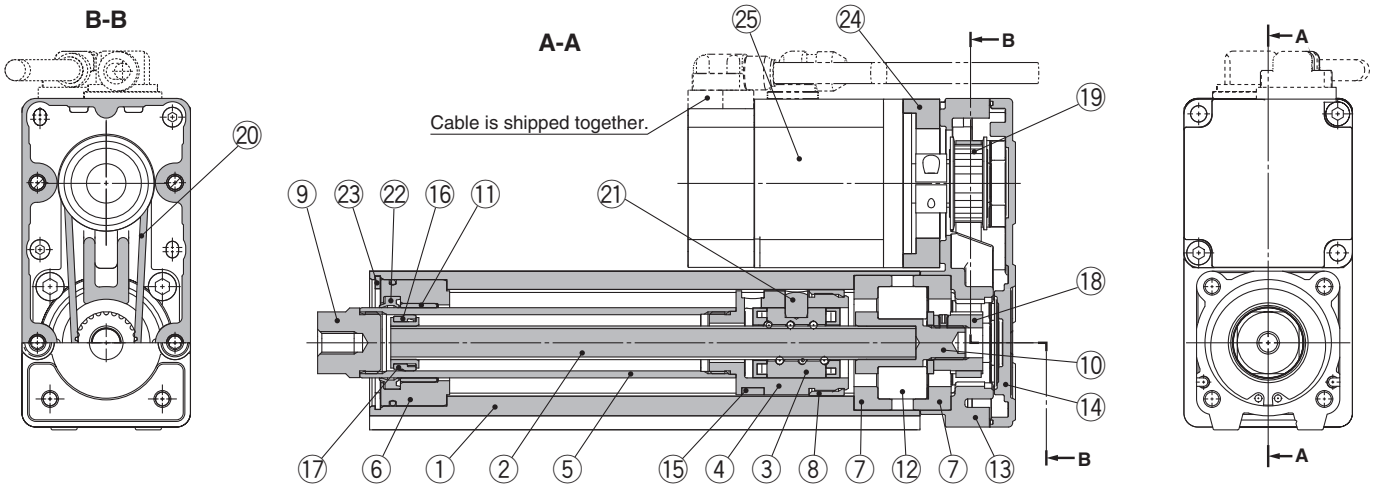

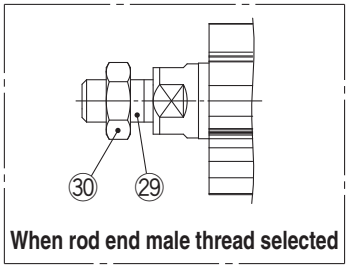

In-line motor type: LEY$^{25}_{32}$D

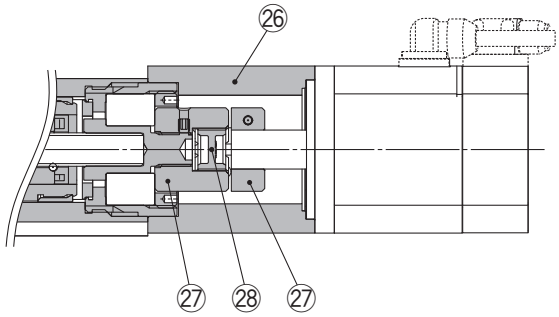

Component Parts

No.	Description	Material	Note
1	**Body**	Aluminium alloy	Anodised
2	**Ball screw shaft**	Alloy steel	
3	**Ball screw nut**	Synthetic resin/Alloy steel	
4	**Piston**	Aluminium alloy	
5	**Piston rod**	Stainless steel	Hard chrome plating
6	**Rod cover**	Aluminium alloy	
7	**Bearing holder**	Aluminium alloy	
8	**Rotation stopper**	POM	
9	**Socket**	Free cutting carbon steel	Nickel plating
10	**Connected shaft**	Free cutting carbon steel	Nickel plating
11	**Bushing**	Bearing alloy	
12	**Bearing**	—	
13	**Return box**	Aluminium die-cast	Coating
14	**Return plate**	Aluminium die-cast	Coating
15	**Magnet**	—	
16	**Wear ring holder**	Stainless steel	Stroke 101 mm or more
17	**Wear ring**	POM	Stroke 101 mm or more
18	**Screw shaft pulley**	Aluminium alloy	
19	**Motor pulley**	Aluminium alloy	
20	**Belt**	—	
21	**Parallel pin**	Stainless steel	
22	**Seal**	NBR	
23	**Retaining ring**	Steel for spring	
24	**Motor adapter**	Aluminium alloy	Coating
25	**Motor**	—	
26	**Motor block**	Aluminium alloy	Coating
27	**Hub**	Aluminium alloy	
28	**Spider**	Urethane	
29	**Socket (Male thread)**	Free cutting carbon steel	Nickel plating
30	**Nut**	Alloy steel	Zinc chromated

Replacement Parts (Motor top/parallel only)/Belt

No.	Size	Order no.
20	**25**	LE-D-2-2
	32	LE-D-2-4

Replacement Parts/Grease Pack

Applied portion	Order no.
Piston rod	GR-S-010 (10 g) GR-S-020 (20 g)

∗ Apply grease on the piston rod periodically.
Grease should be applied at 1 million cycles or 200 km, whichever comes first.

Dimensions: Motor Top/Parallel

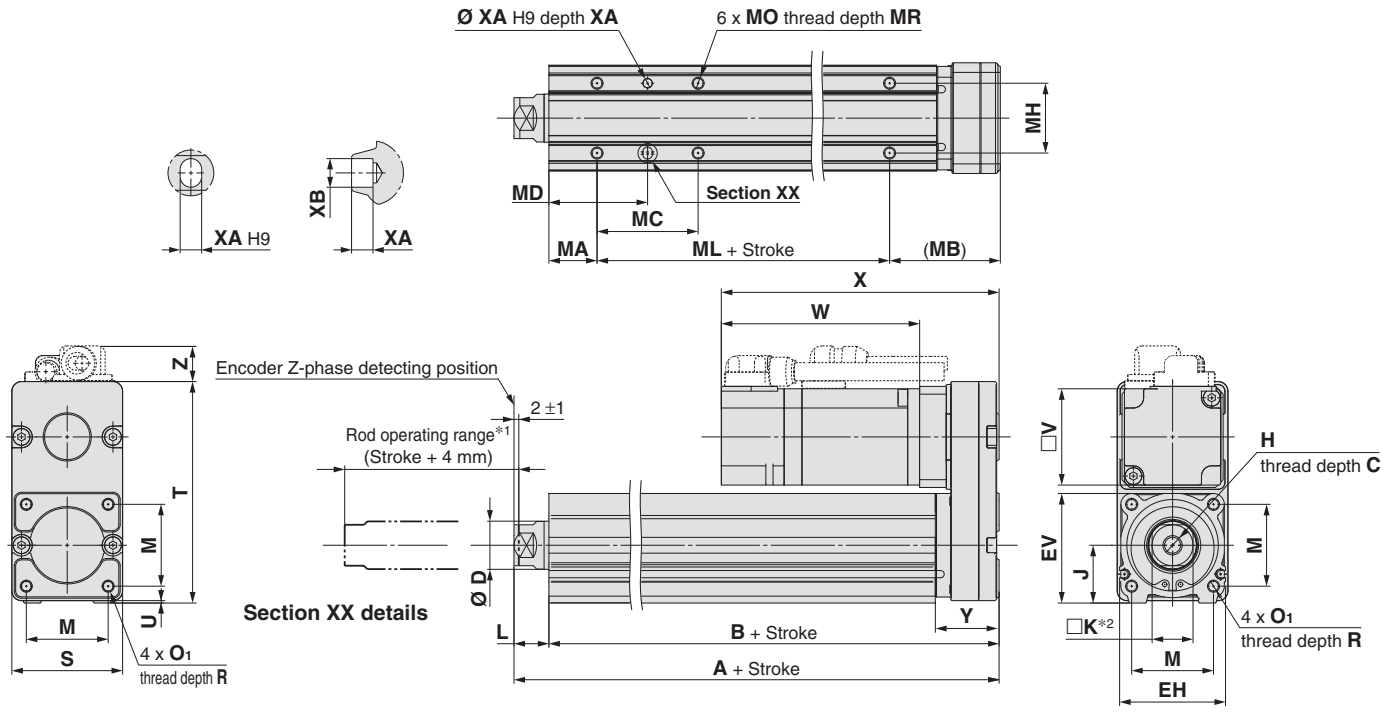

*1 Range within which the rod can move
Make sure workpieces mounted on the rod do not interfere with the workpieces and facilities around the rod.
*2 The direction of rod end width across flats (□K) differs depending on the products.

[mm]

Size	Stroke range [mm]	A	B	C	D	EH	EV	H	J	K	L	M	O_1	R	S	T	U	Y	V
25	15 to 100	130.5	116	13	20	44	45.5	M8 x 1.25	24	17	14.5	34	M5 x 0.8	8	46	92	1	26.5	40
	105 to 400	155.5	141																
32	20 to 100	148.5	130	13	25	51	56.5	M8 x 1.25	31	22	18.5	40	M6 x 1.0	10	60	118	1	34	60
	105 to 500	178.5	160																

Size	Stroke range [mm]	Incremental encoder						Absolute encoder [S6/S7]						Absolute encoder [T6/T7]					
		Without lock			With lock			Without lock			With lock			Without lock			With lock		
		W	X	Z	W	X	Z	W	X	Z	W	X	Z	W	X	Z	W	X	Z
25	15 to 100	87	120	14.1	123.9	156.9	15.8	82.4	115.4	14.1	123.5	156.5	15.8	82.4	115.4	14.1	123	156	15.8
	105 to 400																		
32	20 to 100	88.2	128.2	17.1	116.8	156.8	17.1	76.6	116.6	17.1	116.1	156.1	17.1	76.6	116.6	17.1	113.4	153.4	17.1
	105 to 500																		

Body Bottom Tapped

[mm]

Size	Stroke range [mm]	MA	MB	MC	MD	MH	ML	MO	MR	XA	XB
25	15 to 39	20	46	24	32	29	50	M5 x 0.8	6.5	4	5
	40 to 100			42	41						
	101 to 124						75				
	125 to 200			59	49.5						
	201 to 400			76	58						
32	20 to 39	25	55	22	36	30	50	M6 x 1	8.5	5	6
	40 to 100			36	43						
	101 to 124						80				
	125 to 200			53	51.5						
	201 to 500			70	60						

Dimensions: Motor Top/Parallel

Motor left side parallel type: LEY$^{25}_{32}$L

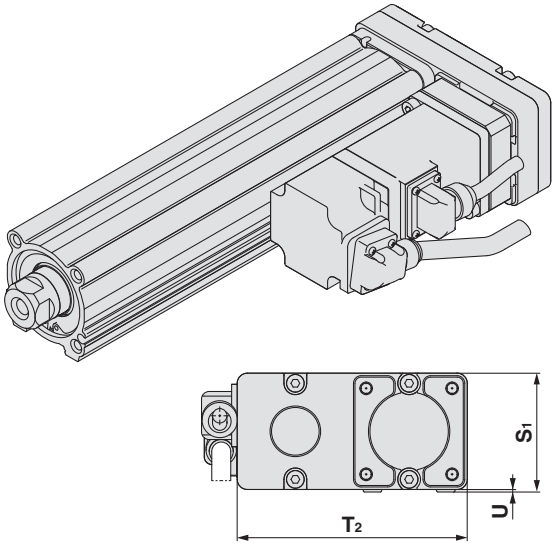

Motor right side parallel type: LEY$^{25}_{32}$R

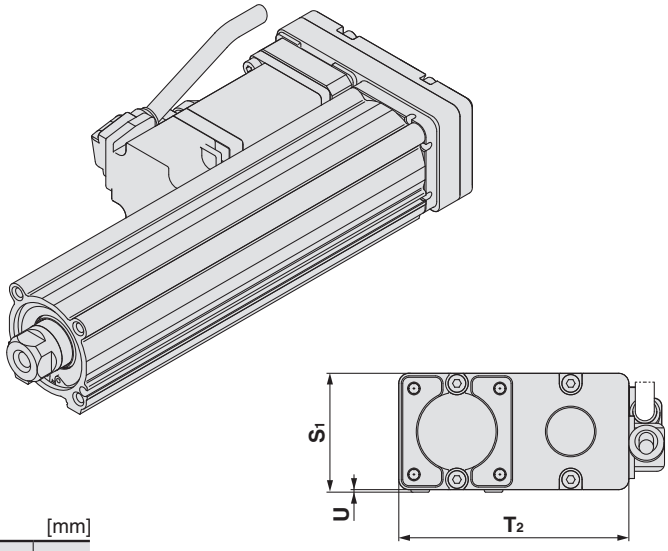

[mm]

Size	S_1	T_2	U
25	47	91	1
32	61	117	1

∗ When the motor is mounted on the left or right side in parallel, the groove for auto switch on the side to which the motor is mounted is hidden.

Dimensions: In-line Motor

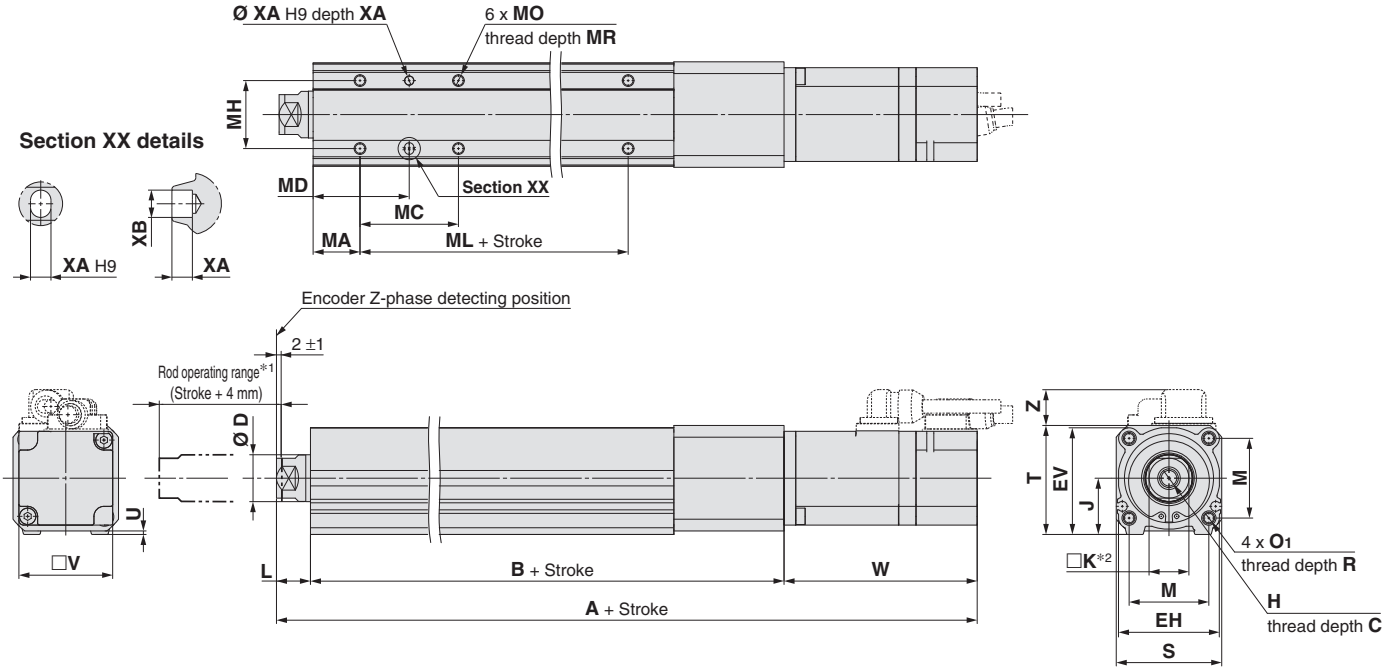

*1 Range within which the rod can move
Make sure workpieces mounted on the rod do not interfere with the workpieces and facilities around the rod.
*2 The direction of rod end width across flats (□K) differs depending on the products.

[mm]

Size	Stroke range [mm]	C	D	EH	EV	H	J	K	L	M	O1	R	S	T	U	B	V
25	15 to 100	13	20	44	45.5	M8 x 1.25	24	17	14.5	34	M5 x 0.8	8	45	46.5	1.5	136.5	40
	105 to 400															161.5	
32	20 to 100	13	25	51	56.5	M8 x 1.25	31	22	18.5	40	M6 x 1.0	10	60	61	1	156	60
	105 to 500															186	

Size	Stroke range [mm]	Incremental encoder						Absolute encoder [S6/S7]						Absolute encoder [T6/T7]					
		Without lock			With lock			Without lock			With lock			Without lock			With lock		
		A	W	Z	A	W	Z	A	W	Z	A	W	Z	A	VB	VC	A	VB	VC
25	15 to 100	238	87	14.6	274.9	123.9	16.3	233.4	82.4	14.6	274.5	123.5	16.3	233.4	82.4	14.6	274	123	16.3
	105 to 400	263			299.9			258.4			299.5			258.4			299		
32	20 to 100	262.7	88.2	17.1	291.3	116.8	17.1	251.1	76.6	17.1	290.6	116.1	17.1	251.1	76.6	17.1	287.9	113.4	17.1
	105 to 500	292.7			321.3			281.1			320.6			281.1			317.9		

Body Bottom Tapped

[mm]

Size	Stroke range [mm]	MA	MC	MD	MH	ML	MO	MR	XA	XB
25	15 to 39	20	24	32	29	50	M5 x 0.8	6.5	4	5
	40 to 100		42	41						
	101 to 124					75				
	125 to 200		59	49.5						
	201 to 400		76	58						
32	20 to 39	25	22	36	30	50	M6 x 1	8.5	5	6
	40 to 100		36	43						
	101 to 124					80				
	125 to 200		53	51.5						
	201 to 500		70	60						

Dimensions

End male thread: LEY$^{25}_{32}$□□$^{A}_{B}$-□□M

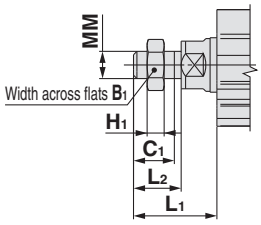

* Refer to page 97 for details on the rod end nut and mounting bracket.
* Refer to the precautions on page 187 when mounting end brackets such as knuckle joint or workpieces.

[mm]

Size	B_1	C_1	H_1	L_1	L_2	MM
25	22	20.5	8	38	23.5	M14 x 1.5
32	22	20.5	8	42.0	23.5	M14 x 1.5

* The L_1 measurement is when the unit is in the original position. At this position, 2 mm at the end.

Foot: LEY$^{25}_{32}$□□$^{A}_{B}$-□□□L

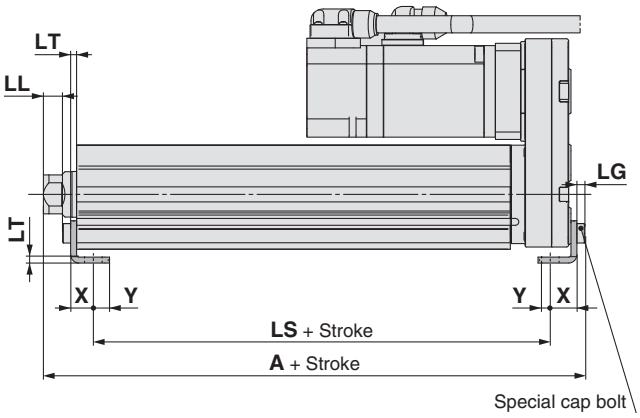

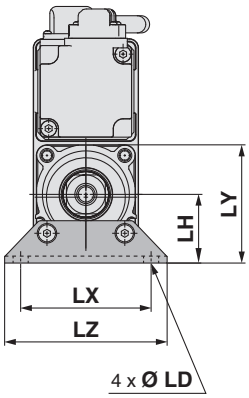

Included parts
・Foot bracket
・Body mounting bolt

Outward mounting

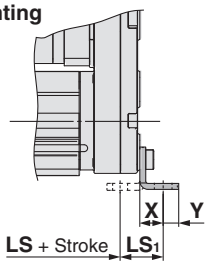

Foot

[mm]

Size	Stroke range [mm]	A	LS	LS_1	LL	LD	LG	LH	LT	LX	LY	LZ	X	Y
25	15 to 100	136.6	98.8	19.8	8.4	6.6	3.5	30	2.6	57	51.5	71	11.2	5.8
	101 to 400	161.6	123.8											
32	20 to 100	155.7	114	19.2	11.3	6.6	4	36	3.2	76	61.5	90	11.2	7
	101 to 500	185.7	144											

Material: Carbon steel (Chromate treated)

* The A measurement is when the unit is in the Z-phase first detecting position. At this position, 2 mm at the end.
* When the motor mounting is the right or left side parallel type, the head side foot bracket should be mounted outward.

Dimensions

Rod flange: LEY$^{25}_{32}$□□$^{A}_{B}_{C}$-□□□F

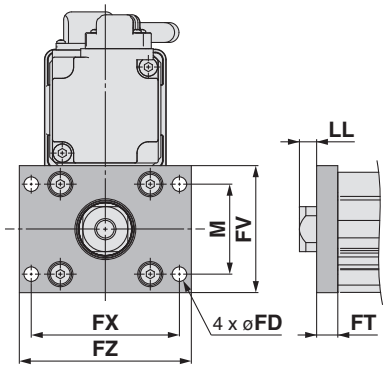

Head flange: LEY25□□$^{A}_{B}_{C}$-□□□G

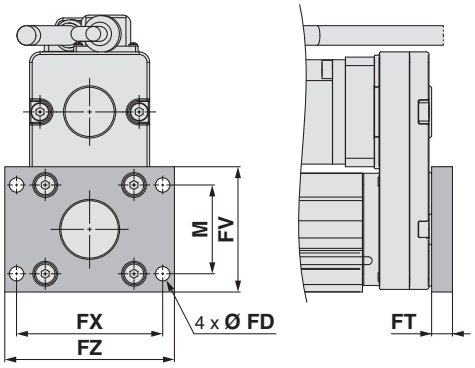

* The head flange type is not available for the LEY32.

Included parts
- Flange
- Body mounting bolt

Rod/Head Flange [mm]

Size	FD	FT	FV	FX	FZ	LL	M
25	5.5	8	48	56	65	6.5	34
32	5.5	8	54	62	72	10.5	40

Material: Carbon steel (Nickel plating)

Double clevis: LEY$^{25}_{32}$□□$^{A}_{B}_{C}$-□□□D

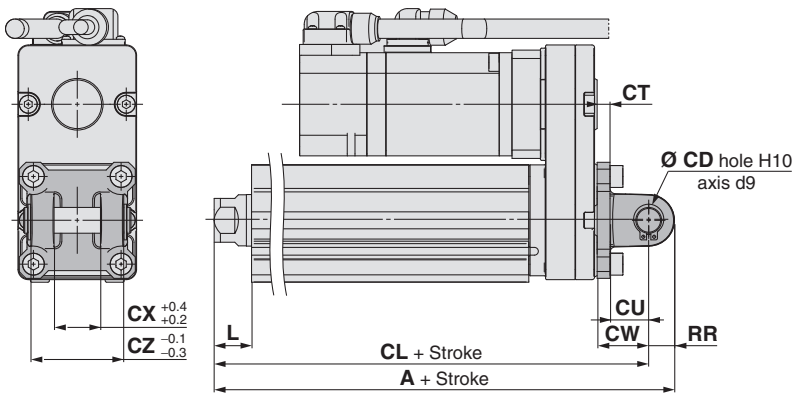

Included parts
- Double clevis
- Body mounting bolt
- Clevis pin
- Retaining ring

* Refer to page 97 for details on the rod end nut and mounting bracket.

Double Clevis [mm]

Size	Stroke range [mm]	A	CL	CD	CT
25	15 to 100	160.5	150.5	10	5
	101 to 200	185.5	175.5		
32	20 to 100	180.5	170.5	10	6
	101 to 200	210.5	200.5		

Size	Stroke range [mm]	CU	CW	CX	CZ	L	RR
25	15 to 100	14	20	18	36	14.5	10
	101 to 200						
32	20 to 100	14	22	18	36	18.5	10
	101 to 200						

Material: Cast iron (Coating)

* The A and CL measurements are when the unit is in the Z-phase first detecting position. At this position, 2 mm at the end.

Electric Actuator/ Rod Type

Dust-tight/Water-jet-proof (IP65 Equivalent)

∗ Option

LEY Series LEY63 Size 63

∗ Refer to tables ❹ and ⓭ below.

RoHS

LECY□ Series ▶ p. 87

Refer to page 41 for model selection.

How to Order

LEY H 63 □ S4 B – 200 □ □ □ □ – S 2 A2 □

❶ ❷ ❸ ❹ ❺ ❻ ❼ ❽ ❾ ❿ ⓫ ⓬ ⓭ ⓮

❶ Accuracy

—	Basic type
H	High-precision type

❷ Size

63

❸ Motor mounting position

—	Top mounting
R	Right side parallel
L	Left side parallel
D	In-line

❹ Motor type

Symbol	Type	Output [W]	Actuator size	Compatible driver	UL-compliant
S4	AC servo motor (Incremental encoder)	400	63	LECSA2-S4	—
S8	AC servo motor (Absolute encoder)	400	63	LECSB2-S8 LECSC2-S8 LECSS2-S8	—
T8				LECSS2-T8	●

❺ Lead [mm]

Symbol	LEY63
A	20
B	10
C	5
L	2.86∗1 ∗2

∗1 Screw lead 5 mm, Pulley ratio [4:7] equivalent lead

∗2 Only available for top mounting and right/left side parallel types

❻ Stroke [mm]

50	50
to	to
800	800

∗ For details, refer to the applicable stroke table below.

❼ Dust-tight/Water-jet-proof

—	IP5x equivalent (Dust-protected)
P	IP65 equivalent (Dust-tight/Water-jet-proof)/ With vent hole tap

∗ When using the dust-tight/water-jet-proof (IP65 equivalent), correctly mount the fitting and tubing to the vent hole tap, and then place the end of the tubing in an area not exposed to dust or water.

∗ The fitting and tubing should be provided separately by the customer. Select [Applicable tubing O.D.: Ø 4 or more, Connection thread: Rc1/8].

∗ Cannot be used in an environment where oil such as cutting oil splashes or it is constantly exposed to water. Take appropriate protective measures. For details on enclosure, refer to "Enclosure" on page 188.

❽ Motor option

—	Without option
B	With lock

❾ Rod end thread

—	Rod end female thread
M	Rod end male thread (1 rod end nut is included.)

❿ Mounting∗1

Symbol	Type	Motor mounting position	
		Top/Parallel	In-line
—	Ends tapped/ Body bottom tapped∗2	●	●
L	Foot	●	—
F	Rod flange∗2	●	●
D	Double clevis∗3	●	—

∗1 The mounting bracket is shipped together with the product but does not come assembled.

∗2 For the horizontal cantilever mounting of the rod flange or ends tapped types, use the actuator within the following stroke range.
• LEY63: 400 mm or less

∗3 For the mounting of the double clevis type, use the actuator within the following stroke range.
• LEY63: 300 mm or less

⓫ Cable type∗1

—	Without cable
S	Standard cable
R	Robotic cable (Flexible cable)

∗1 The motor and encoder cables are included. (The lock cable is also included when the motor with lock option is selected.)

∗ Standard cable entry direction is
• Top/Parallel: (A) Axis side
• In-line: (B) Counter axis side
(Refer to page 264 for details.)

⓬ Cable length∗2 [m]

—	Without cable
2	2
5	5
A	10

∗2 The length of the encoder, motor, and lock cables are the same.

⓭ Driver type

	Compatible driver	Power supply voltage	UL-compliant
—	Without driver		—
A2	LECSA2/Pulse input (Incremental encoder)	200 V to 230 V	—
B2	LECSB2/Pulse input (Absolute encoder)	200 V to 230 V	—
C2	LECSC2/CC-Link (Absolute encoder)	200 V to 230 V	—
S2	LECSS2-S/SSCNET Ⅲ (Absolute encoder)	200 V to 230 V	—
	LECSS2-T/SSCNET Ⅲ/H (Absolute encoder)	200 V to 240 V	●

∗ When a driver type is selected, a cable is included. Select the cable type and cable length.

Example) S2S2: Standard cable (2 m) + Driver (LECSS2)
S2 : Standard cable (2 m)
—: Without cable and driver

⓮ I/O cable length [m]∗1

—	Without cable
H	Without cable (Connector only)
1	1.5

∗1 When "Without driver" is selected for driver type, only "—: Without cable" can be selected. Refer to page 265 if I/O cable is required. (Options are shown on page 265.)

Applicable Stroke Table

Model \ Stroke [mm]	50	100	150	200	250	300	350	400	450	500	600	700	800	Manufacturable stroke range
LEY63	●	●	●	●	●	●	●	●	●	●	●	●	●	50 to 800

∗ Please consult with SMC for non-standard strokes as they are produced as special orders.

Specifications

Model			LEY63S$^{4}_{8}$/T8 (Top/Parallel)				LEY63DS$^{4}_{8}$/T8 (In-line)		
Actuator specifications	Work load [kg]	Horizontal∗1	40	70	80	200	40	70	80
		Vertical∗14	19	38	72	115	19	38	72
	Force [N]/Set value∗2 : 15 to 50 %∗3 ∗4		156 to 521	304 to 1012	573 to 1910	1003 to 3343	156 to 521	304 to 1012	573 to 1910
	Max. speed∗5 [mm/s] Stroke range	Up to 500	1000	500	250	70	1000	500	250
		505 to 600	800	400	200		800	400	200
		605 to 700	600	300	150		600	300	150
		705 to 800	500	250	125		500	250	125
	Pushing speed [mm/s]∗6		30 or less						
	Max. acceleration/deceleration [mm/s²]		5000			3000	5000		
	Positioning repeatability [mm]	Basic type	±0.02						
		High-precision type	±0.01						
	Lost motion [mm]∗7	Basic type	0.1 or less						
		High-precision type	0.05 or less						
	Screw lead [mm] (including pulley ratio)		20	10	5	5 (2.86)	20	10	5
	Impact/Vibration resistance [m/s²]∗8		50/20						
	Actuation type		Ball screw + Belt			Ball screw + Belt (Pulley ratio 4:7)	Ball screw		
	Guide type		Sliding bushing (Piston rod)						
	Operating temperature range [°C]		5 to 40						
	Operating humidity range [%RH]		90 or less (No condensation)						
	Regeneration option		May be required depending on speed and work load (Refer to pages 43 and 44.)						
Electric specifications	Motor output/Size		400 W/□60						
	Motor type		AC servo motor (200 VAC)						
	Encoder		Motor type S4: Incremental 17-bit encoder (Resolution: 131072 p/rev) Motor type S8: Absolute 18-bit encoder (Resolution: 262144 p/rev) Motor type T8: Absolute 22-bit encoder (Resolution: 4194304 p/rev)						
	Power consumption [W]∗9	Horizontal	210						
		Vertical	230						
	Standby power consumption when operating [W]∗10	Horizontal	2						
		Vertical	18						
	Max. instantaneous power consumption [W]∗11		1275						
Lock unit specifications	Type∗12		Non-magnetising lock						
	Holding force [N]		313	607	1146	2006	313	607	1146
	Power consumption [W] at 20 °C∗13		7.9						
	Rated voltage [V]		24 VDC $^{0}_{-10\ \%}$						

∗1 This is the maximum value of the horizontal work load. An external guide is necessary to support the load. The actual work load changes according to the condition of the external guide. Confirm the load using the actual device.
∗2 Set values for the driver
∗3 The force setting range (set values for the driver) for the force control with the torque control mode. The force and duty ratio change according to the set value. Set it with reference to "Force Conversion Graph" on page 45. When the control equivalent to the pushing operation of the controller LECP series is performed, select the LECSS driver and combine it with the Simple Motion (manufactured by Mitsubishi Electric Corporation) which has a pushing operation function.
∗4 For the motor type T8, the set value is from 12 to 40 %.
∗5 The allowable speed changes according to the stroke. Set the number of rotations according to speed.
∗6 The allowable collision speed for collision with the workpiece with the torque control mode
∗7 A reference value for correcting an error in reciprocal operation
∗8 Impact resistance: No malfunction occurred when the actuator was tested with a drop tester in both an axial direction and a perpendicular direction to the lead screw. (The test was performed with the actuator in the initial state.)
Vibration resistance: No malfunction occurred in a test ranging between 45 to 2000 Hz. The test was performed in both an axial direction and a perpendicular direction to the lead screw. (The test was performed with the actuator in the initial state.)
∗9 The power consumption (including the driver) is for when the actuator is operating.
∗10 The standby power consumption when operating (including the driver) is for when the actuator is stopped in the set position during the operation.
∗11 The maximum instantaneous power consumption (including the driver) is for when the actuator is operating.
∗12 Only when motor option "With lock" is selected
∗13 For an actuator with lock, add the power consumption for the lock.
∗14 When mounting vertically and using the product facing upwards in an environment where water is present, take necessary measures to prevent water from splashing on the rod cover, because water will accumulate on the rod seal due to the structure of the product.

Weight

Product Weight

[kg]

Series		LEY63S$^{4}_{8}$ (Motor mounting position: Top/Parallel)												
Stroke [mm]		50	100	150	200	250	300	350	400	450	500	600	700	800
Motor type	Incremental encoder	4.9	5.4	6.0	6.6	7.8	8.3	8.9	9.4	10.0	10.5	12.2	13.4	14.5
	Absolute encoder (Motor type S8)	5.0	5.5	6.1	6.7	7.9	8.4	9.0	9.5	10.1	10.6	12.3	13.5	14.6
	Absolute encoder (Motor type T8)	4.9	5.4	6.0	6.6	7.8	8.3	8.9	9.4	10.0	10.5	12.2	13.4	14.5

Series		LEY63DS$^{4}_{8}$ (Motor mounting position: In-line)												
Stroke [mm]		50	100	150	200	250	300	350	400	450	500	600	700	800
Motor type	Incremental encoder	5.1	5.6	6.2	6.7	7.9	8.4	9.0	9.6	10.2	10.7	12.4	13.5	14.7
	Absolute encoder (Motor type S8)	5.2	5.7	6.3	6.8	8.0	8.5	9.1	9.7	10.3	10.8	12.5	13.6	14.8
	Absolute encoder (Motor type T8)	5.1	5.6	6.2	6.7	7.9	8.4	9.0	9.6	10.2	10.7	12.4	13.5	14.7

Additional Weight

[kg]

Size		63
Lock	Incremental encoder	0.4
	Absolute encoder (Motor type S8)	0.6
	Absolute encoder (Motor type T8)	0.4
Rod end male thread	Male thread	0.12
	Nut	0.04
Foot bracket (2 sets including mounting bolt)		0.26
Rod flange (including mounting bolt)		0.51
Double clevis (including pin, retaining ring, and mounting bolt)		0.58

Construction

Motor top mounting type: LEY63

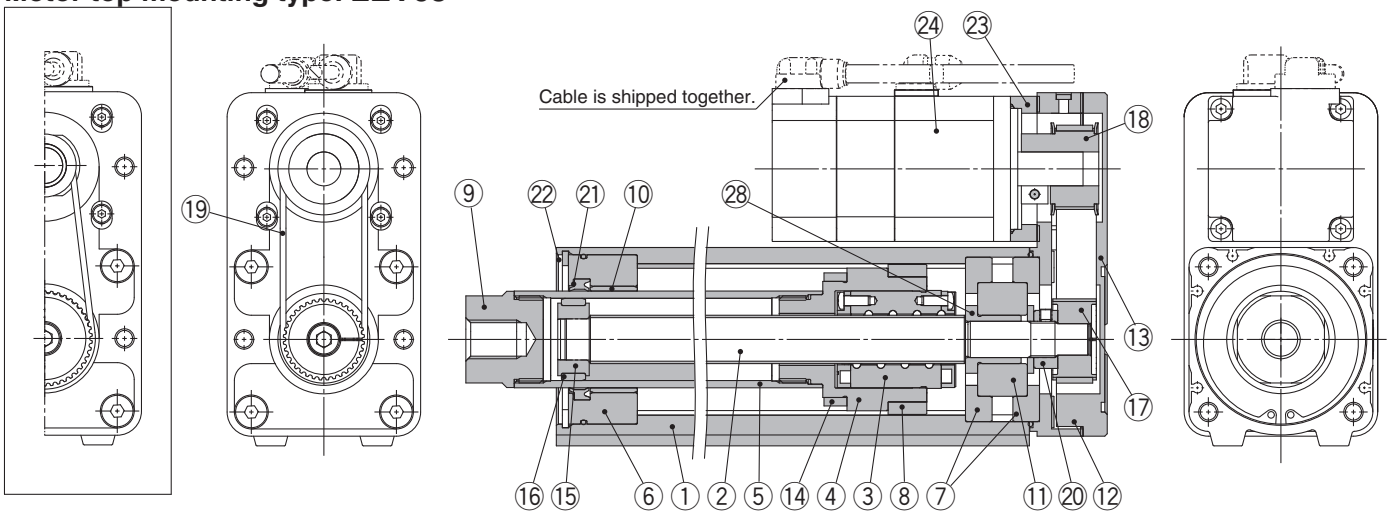

In-line motor type: LEY63D

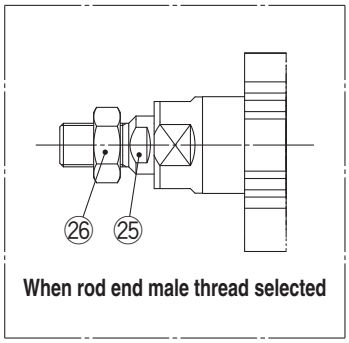

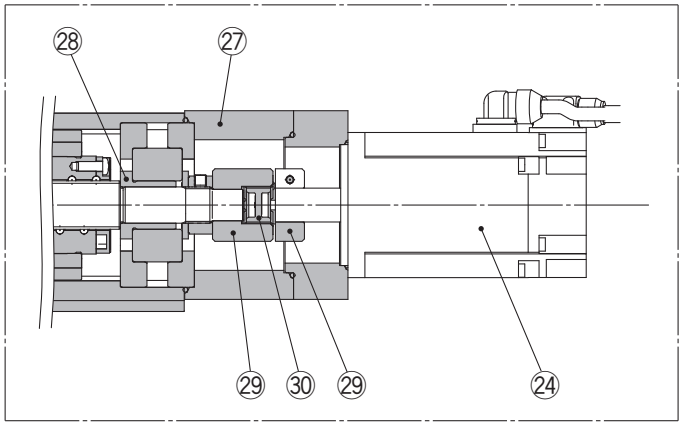

Component Parts

No.	Description	Material	Note
1	**Body**	Aluminium alloy	Anodised
2	**Ball screw shaft**	Alloy steel	
3	**Ball screw nut**	Resin/Alloy steel	
4	**Piston**	Aluminium alloy	
5	**Piston rod**	Stainless steel	Hard chrome plating
6	**Rod cover**	Aluminium alloy	
7	**Bearing holder**	Aluminium alloy	
8	**Rotation stopper**	Resin	
9	**Socket**	Free cutting carbon steel	Nickel plating
10	**Bushing**	Lead bronze cast	
11	**Bearing**	—	
12	**Return box**	Aluminium alloy	Coating
13	**Return plate**	Aluminium alloy	Coating
14	**Magnet**	—	
15	**Wear ring holder**	Stainless steel	

No.	Description	Material	Note
16	**Wear ring**	Resin	
17	**Screw shaft pulley**	Aluminium alloy	
18	**Motor pulley**	Aluminium alloy	
19	**Belt**	—	
20	**Lock nut**	Alloy steel	Black dyed
21	**Seal**	NBR	
22	**Retaining ring**	Steel for spring	
23	**Motor adapter**	Aluminium alloy	Coating
24	**Motor**	—	
25	**Socket (Male thread)**	Free cutting carbon steel	Nickel plating
26	**Nut**	Alloy steel	Trivalent chromated
27	**Motor block**	Aluminium alloy	Coating
28	**Spacer A**	Stainless steel	
29	**Hub**	Aluminium alloy	
30	**Spider**	Urethane	

Replacement Parts (Motor top/parallel only)/Belt

No.	Size	Lead	Order no.
19	63	A/B/C	LE-D-2-5
		L	LE-D-2-6

Replacement Parts/Grease Pack

Applied portion	Order no.
Piston rod	GR-S-010 (10 g) GR-S-020 (20 g)

* Apply grease on the piston rod periodically.
Grease should be applied at 1 million cycles or 200 km, whichever comes first.

Dimensions: Motor Top/Parallel

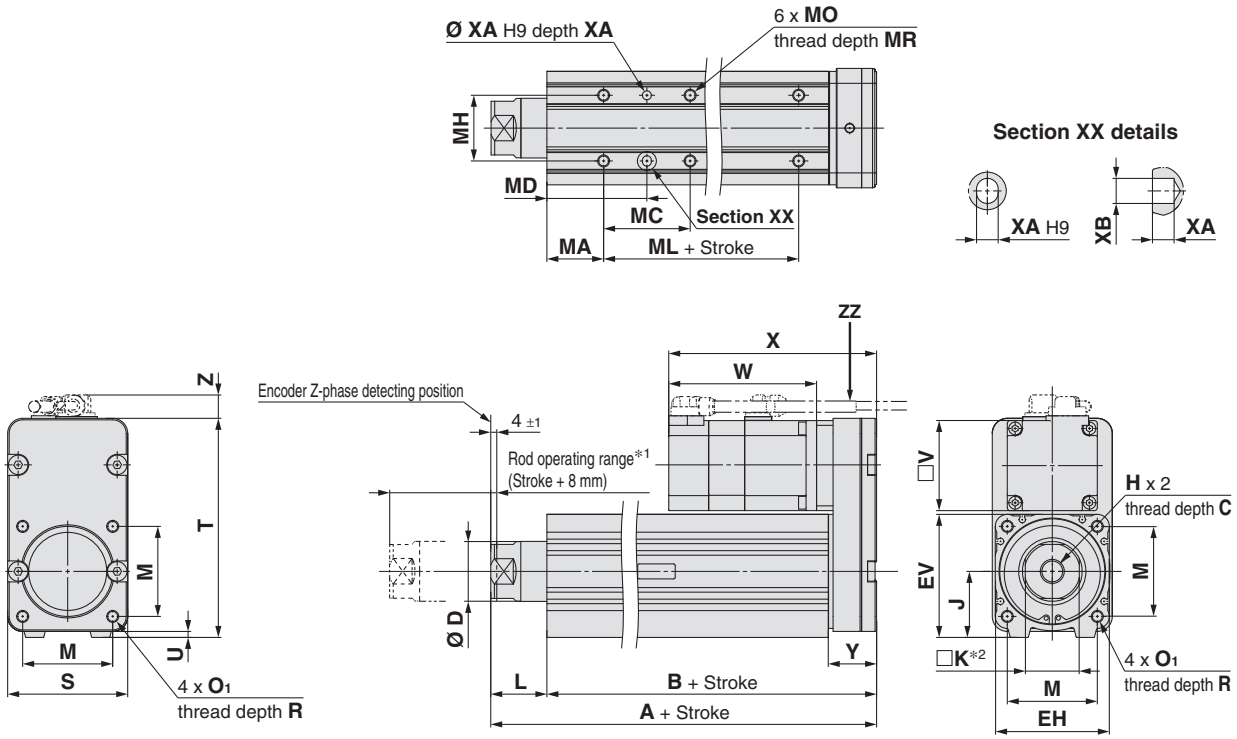

*1 Range within which the rod can move
Make sure workpieces mounted on the rod do not interfere with the workpieces and facilities around the rod.
*2 The direction of rod end width across flats (□K) differs depending on the products.

IP65 equivalent (Dust-tight/Water-jet-proof): LEY63□□□-□P

(View ZZ)

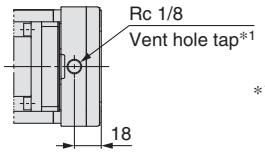

∗1 When using the dust-tight/water-jet-proof (IP65 equivalent), correctly mount the fitting and tubing to the vent hole tap, and then place the end of the tubing in an area not exposed to dust or water. The fitting and tubing should be provided separately by the customer.
Select [Applicable tubing O.D.: Ø 4 or more, Connection thread: Rc1/8].

[mm]

Size	Stroke range [mm]	A	B	C	D	EH	EV	H	J	K	L	M	O1	R	S	Y	T	U	V
63	Up to 200	192.6	155.2	21	40	76	82	M16 x 2	44	36	37.4	60	M8 x 1.25	16	80	32.2	146	4	60
	205 to 500	227.6	190.2																
	505 to 800	262.6	225.2																

Size	Stroke range [mm]	Incremental encoder						Absolute encoder [S8]						Absolute encoder [T8]					
		Without lock			With lock			Without lock			With lock			Without lock			With lock		
		W	X	Z	W	X	Z	W	X	Z	W	X	Z	W	X	Z	W	X	Z
63	Up to 200	110.2	150.2	15.6 (16.6)*1	138.8	178.8	15.6 (16.6)*1	98.5	138.5	15.6 (16.6)*1	138	178	15.6 (16.6)*1	98.3	138.3	15.6 (16.6)*1	135.1	175.1	15.6 (16.6)*1
	205 to 500																		
	505 to 800																		

∗1 The values in ( ) are the dimensions when L is selected for screw lead.

Body Bottom Tapped

[mm]

Size	Stroke range [mm]	MA	MC	MD	MH	ML	MO	MR	XA	XB
63	50 to 74	38	24	50	44	65	M8 x 1.25	10	6	7
	75 to 124		45	60.5						
	125 to 200		58	67						
	201 to 500		86	81		100				
	501 to 800					135				

Dimensions: Motor Top/Parallel

Motor left side parallel type: LEY63L

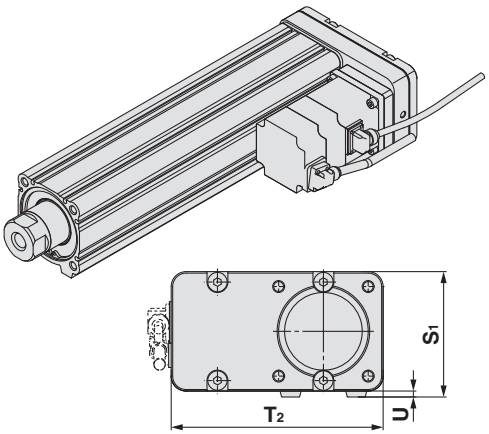

Motor right side parallel type: LEY63R

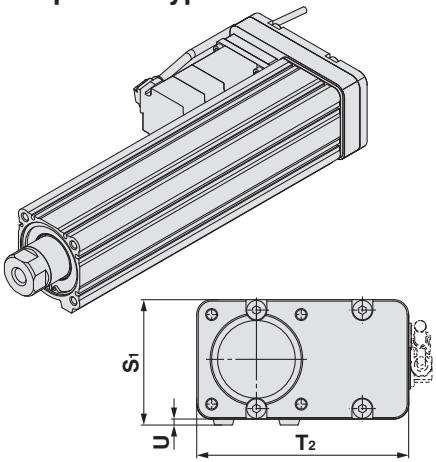

[mm]

Size	S_1	T_2	U
63	84	142	4

∗ When the motor is mounted on the left or right side in parallel, the groove for auto switch on the side to which the motor is mounted is hidden.

Dimensions: In-line Motor

LEY63D□

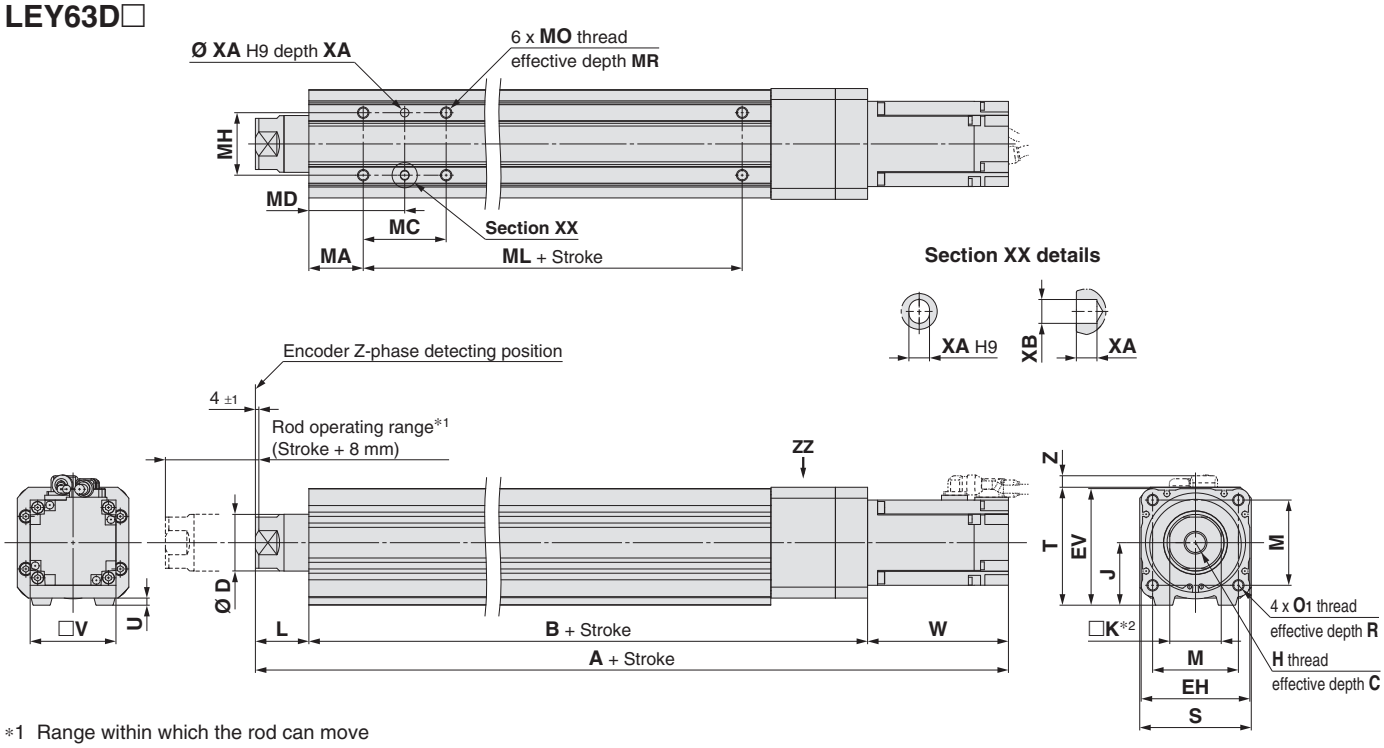

∗1 Range within which the rod can move
Make sure workpieces mounted on the rod do not interfere with the workpieces and facilities around the rod.
∗2 The direction of rod end width across flats (□K) differs depending on the products.

[mm]

Size	Stroke range [mm]	C	D	EH	EV	H	J	K	L	M	O1	R	S	T	U	B	V
63	Up to 200	21	40	76	82	M16 x 2	44	36	37.4	60	M8 x 1.25	16	78	83	5	190.7	60
	205 to 500															225.7	
	505 to 800															260.7	

Size	Stroke range [mm]	Incremental encoder						Absolute encoder [S8]						Absolute encoder [T8]					
		Without lock			With lock			Without lock			With lock			Without lock			With lock		
		A	W	Z	A	W	Z	A	W	Z	A	W	Z	A	W	Z	A	W	Z
63	Up to 200	338.3	110.2	8.1	366.9	138.8	8.1	326.6	98.5	8.1	366.1	138	8.1	326.4	98.3	8.1	363.2	135.1	8.1
	205 to 500	373.3			401.9			361.6			401.1			361.4			398.2		
	505 to 800	408.3			436.9			396.6			436.1			396.4			433.2		

Body Bottom Tapped

[mm]

Size	Stroke range [mm]	MA	MC	MD	MH	ML	MO	MR	XA	XB
63	50 to 74	38	24	50	44	65	M8 x 1.25	10	6	7
	75 to 124		45	60.5						
	125 to 200		58	67						
	201 to 500		86	81		100				
	501 to 800					135				

IP65 equivalent (Dust-tight/Water-jet-proof): LEY63D□□-□P
(View ZZ)

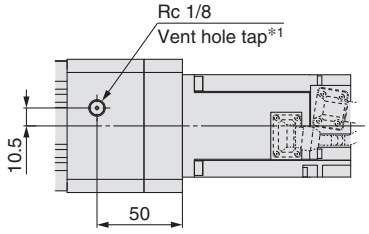

∗1 When using the dust-tight/water-jet-proof (IP65 equivalent), correctly mount the fitting and tubing to the vent hole tap, and then place the end of the tubing in an area not exposed to dust or water. The fitting and tubing should be provided separately by the customer.
Select [Applicable tubing O.D.: Ø 4 or more, Connection thread: Rc1/8].

Dimensions

End male thread: LEY63□□□-□□M

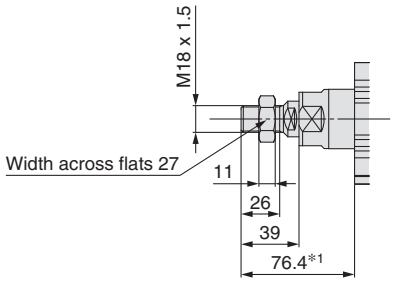

∗1 The measurement 76.4 is when the unit is in the Z-phase detecting position. At this position, 4 mm from the end of the operating range.

Foot: LEY63□□□-□□L

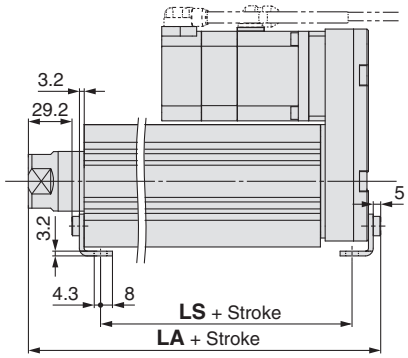

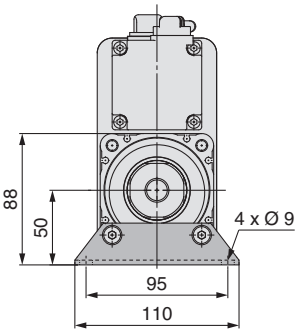

Outward mounting

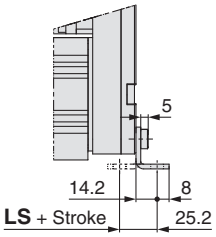

Included parts
• Foot bracket
• Body mounting bolt

Material: Carbon steel (Chromate treated)
∗ The overall length is when the unit is in the Z-phase detecting position. At this position, 4 mm from the end of the operating range.
∗ When the motor mounting is the right or left side parallel type, the head side foot bracket should be mounted outward.

[mm]

Stroke range [mm]	LA	LS
50 to 200	200.8	133.2
201 to 500	235.8	168.2
501 to 800	270.8	203.2

Rod flange: LEY63□□□-□□F

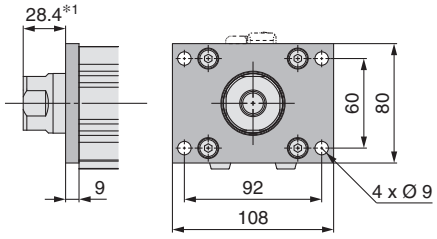

Included parts
• Flange
• Body mounting bolt

Material: Carbon steel (Nickel plating)
∗1 When the unit is in the Z-phase detecting position. At this position, 4 mm from the end of the operating range.

Double clevis: LEY63□□□-□□D

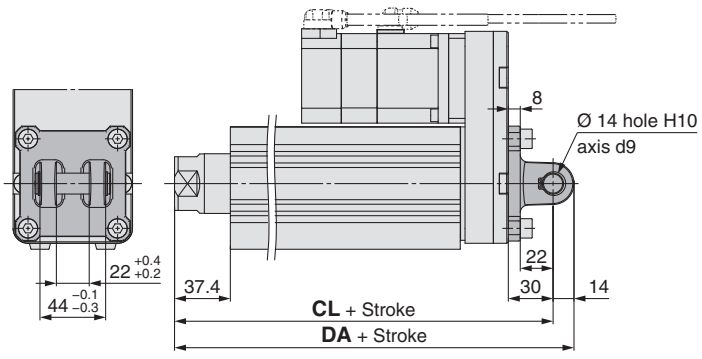

Included parts
• Double clevis
• Body mounting bolt
• Clevis pin
• Retaining ring

Material: Cast iron (Coating)
∗ The overall length is when the unit is in the Z-phase detecting position. At this position, 4 mm from the end of the operating range.

[mm]

Stroke range [mm]	DA	CL
50 to 200	236.6	222.6
201 to 500	271.6	257.6
501 to 800	306.6	292.6

Electric Actuator/ Rod Type

LEY Series LEY25, 32, 63

CE RoHS

Dust-tight/Water-jet-proof (IP65 Equivalent) ▸p. 169 Secondary Battery Compatible ▸p. 183

LECS□ Series ▸p. 69, 79

How to Order

LEY H 25 □ V6 B – 200 □ □ □ □ – S 3 M2 □

❶ ❷ ❸ ❹ ❺ ❻ ❼ ❽ ❾ ❿ ⓫ ⓬ ⓭ ⓮

❶ Accuracy

—	Basic type
H	High-precision type

❷ Size

25
32
63

❸ Motor mounting position

—	Top mounting
R	Right side parallel
L	Left side parallel
D	In-line

❹ Motor type

Symbol	Type	Output [W]	Size	Compatible driver
V6*1	AC servo motor (Absolute encoder)	100	25	LECYM2-V5 LECYU2-V5
V7		200	32	LECYM2-V7 LECYU2-V7
V8		400	63	LECYM2-V8 LECYU2-V8

*1 For motor type V6, the compatible driver part number suffix is V5.

❺ Lead [mm]

Symbol	LEY25	LEY32*1	LEY63
A	12	16 (20)	20
B	6	8 (10)	10
C	3	4 (5)	5
L	—	—	2.86*2

*1 The values shown in ( ) are the leads for the top mounting, right/left side parallel types. (Equivalent leads which include the pulley ratio [1.25:1])

*2 Only available for top mounting and right/left side parallel types (Equivalent leads which include the pulley ratio [4:7])

❻ Stroke [mm]

30	30
to	to
800	800

* For details, refer to the applicable stroke table below.

❼ Dust-tight/Water-jet-proof (Only available for LEY63)

Symbol	LEY25/32	LEY63
—	IP4x equivalent	IP5x equivalent (Dust-protected)
P	—	IP65 equivalent (Dust-tight/ Water-jet-proof)/With vent hole tap

* When using the dust-tight/water-jet-proof (IP65 equivalent), correctly mount the fitting and tubing to the vent hole tap, and then place the end of the tubing in an area not exposed to dust or water.
* The fitting and tubing should be provided separately by the customer. Select [Applicable tubing O.D.: Ø 4 or more, Connection thread: Rc1/8].
* Cannot be used in environments exposed to cutting oil, etc. Take appropriate protective measures. For details on enclosure, refer to "Enclosure" on page 188.

❽ Motor option

—	Without option
B	With lock

* When "With lock" is selected for the top mounting and right/left side parallel types, the motor body will stick out from the end of the body for size 25 with strokes of 30 mm or less. Check for interference with workpieces before selecting a model.

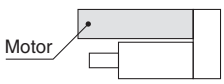

❾ Rod end thread

—	Rod end female thread
M	Rod end male thread (1 rod end nut is included.)

Applicable Stroke Table

●: Standard

Model \ Stroke [mm]	30	50	100	150	200	250	300	350	400	450	500	600	700	800	Manufacturable stroke range
LEY25	●	●	●	●	●	●	●	●	●	—	—	—	—	—	15 to 400
LEY32	●	●	●	●	●	●	●	●	●	●	●	—	—	—	20 to 500
LEY63	—	●	●	●	●	●	●	●	●	●	●	●	●	●	50 to 800

* Please consult with SMC for non-standard strokes as they are produced as special orders.

For auto switches, refer to pages 101 to 103.

Motor mounting position: Top/Parallel

Motor mounting position: In-line

⑩ Mounting*1

Symbol	Type	Motor mounting position	
		Top/Parallel	In-line
—	Ends tapped/ Body bottom tapped*2	●	●
L	Foot	●	—
F	Rod flange*2	●*4	●
G	Head flange*2	●*5	—
D	Double clevis*3	●	—

*1 The mounting bracket is shipped together with the product but does not come assembled.
*2 For the horizontal cantilever mounting of the ends tapped, rod flange, or head flange types, use the actuator within the following stroke range.
· LEY25: 200 mm or less · LEY32: 100 mm or less · LEY63: 400 mm or less
*3 For the mounting of the double clevis type, use the actuator within the following stroke range.
· LEY25: 200 mm or less · LEY32: 200 mm or less · LEY63: 300 mm or less
*4 The rod flange type is not available for the LEY25 with a 30 mm stroke and motor option "With lock."
*5 The head flange type is not available for the LEY32/LEY63.

⑪ Cable type*1

—	Without cable
S	Standard cable
R	Robotic cable (Flexible cable)

*1 The motor and encoder cables are included. The motor cable for lock option is included when the motor with lock option is selected.

⑫ Cable length [m]*1

—	Without cable
3	3
5	5
A	10
C	20

*1 The length of the motor and encoder cables are the same. (For with lock)

⑬ Driver type

	Compatible driver	Power supply voltage [V]
—	Without driver	—
M2	LECYM2-V□	200 to 230
U2	LECYU2-V□	200 to 230

* When a driver type is selected, a cable is included. Select the cable type and cable length.

⑭ I/O cable length [m]*1

—	Without cable
H	Without cable (Connector only)
1	1.5

*1 When "Without driver" is selected for driver type, only "—: Without cable" can be selected. Refer to page 278 if I/O cable is required. (Options are shown on page 278.)

Compatible Driver

Driver type	MECHATROLINK-Ⅱ type	MECHATROLINK-Ⅲ type
Series	LECYM	LECYU
Applicable network	MECHATROLINK-Ⅱ	MECHATROLINK-Ⅲ
Control encoder	Absolute 20-bit encoder	
Communication device	USB communication, RS-422 communication	
Power supply voltage [V]	200 to 230 VAC (50/60 Hz)	
Reference page	271	

Specifications

Model			LEY25V6 (Top/Parallel)/LEY25DV6 (In-line)			LEY32V7 (Top/Parallel)			LEY32DV7 (In-line)		
Actuator specifications	Work load [kg]	Horizontal*1	18	50	50	30	60	60	30	60	60
		Vertical	8	16	30	9	19	37	12	24	46
	Force [N]*2 (Set value: 45 to 90 %)		65 to 131	127 to 255	242 to 485	79 to 157	154 to 308	294 to 588	98 to 197	192 to 385	368 to 736
	Max.*3 speed [mm/s]	Stroke range: Up to 300	900	450	225	1200	600	300	1000	500	250
		305 to 400	600	300	150						
		405 to 500	—	—	—	800	400	200	640	320	160
	Pushing speed [mm/s]*4		35 or less			30 or less			30 or less		
	Max. acceleration/deceleration [mm/s²]		5000			5000					
	Positioning repeatability [mm]	Basic type	±0.02			±0.02					
		High-precision type	±0.01			±0.01					
	Lost motion*5 [mm]	Basic type	0.1 or less			0.1 or less					
		High-precision type	0.05 or less			0.05 or less					
	Lead [mm] (including pulley ratio)		12	6	3	20	10	5	16	8	4
	Impact/Vibration resistance [m/s²]*6		50/20			50/20					
	Actuation type		Ball screw + Belt (LEY□)/Ball screw (LEY□D)			Ball screw + Belt [1.25:1]			Ball screw		
	Guide type		Sliding bushing (Piston rod)			Sliding bushing (Piston rod)					
	Operating temperature range [°C]		5 to 40			5 to 40					
	Operating humidity range [%RH]		90 or less (No condensation)			90 or less (No condensation)					
	Conditions for*7 "Regenerative resistor" [kg]	Horizontal	Not required			Not required					
		Vertical	6 or more			4 or more					
Electric specifications	Motor output/Size		100 W/□40			200 W/□60					
	Motor type		AC servo motor (200 VAC)			AC servo motor (200 VAC)					
	Encoder		Absolute 20-bit encoder (Resolution: 1048576 p/rev)								
	Power consumption [W]*8	Horizontal	45			65			65		
		Vertical	145			175			175		
	Standby power consumption when operating [W]*9	Horizontal	2			2			2		
		Vertical	8			8			8		
	Max. instantaneous power consumption [W]*10		445			724			724		
Lock unit specifications	Type*11		Non-magnetising lock								
	Holding force [N]		131	255	485	157	308	588	197	385	736
	Power consumption [W] at 20 °C*12		5.5			6			6		
	Rated voltage [V]		24 VDC $^{+10\ \%}_{0}$								

*1 This is the maximum value of the horizontal work load. An external guide is necessary to support the load. The actual work load changes according to the condition of the external guide. Confirm the load using the actual device.
*2 The force setting range (set values for the driver) for the force control with the torque control mode. Set it with reference to "Force Conversion Graph (Guide)" on page 52.
*3 The allowable speed changes according to the stroke.
*4 The allowable collision speed for collision with the workpiece with the torque control mode
*5 A reference value for correcting an error in reciprocal operation
*6 Impact resistance: No malfunction occurred when the actuator was tested with a drop tester in both an axial direction and a perpendicular direction to the lead screw. (The test was performed with the actuator in the initial state.)
Vibration resistance: No malfunction occurred in a test ranging between 45 to 2000 Hz. The test was performed in both an axial direction and a perpendicular direction to the lead screw. (The test was performed with the actuator in the initial state.)
*7 The work load conditions which require "Regenerative resistor" when operating at the maximum speed (Duty ratio: 100 %). Order the regenerative resistor separately. For details, refer to "Conditions for Regenerative Resistor (Guide)" on pages 50 and 51.
*8 The power consumption (including the driver) is for when the actuator is operating.
*9 The standby power consumption when operating (including the driver) is for when the actuator is stopped in the set position during the operation.
*10 The maximum instantaneous power consumption (including the driver) is for when the actuator is operating.
*11 Only when motor option "With lock" is selected
*12 For an actuator with lock, add the power consumption for the lock.

Weight

Product Weight

[kg]

Series	LEY25V6 (Motor mounting position: Top/Parallel)									LEY32V7 (Motor mounting position: Top/Parallel)										
Stroke [mm]	30	50	100	150	200	250	300	350	400	30	50	100	150	200	250	300	350	400	450	500
Weight [kg]	1.2	1.3	1.6	1.7	1.9	2.1	2.2	2.4	2.6	2.3	2.4	2.7	3.2	3.5	3.8	4.0	4.3	4.6	4.9	5.2

Series	LEY25DV6 (Motor mounting position: In-line)									LEY32DV7 (Motor mounting position: In-line)										
Stroke [mm]	30	50	100	150	200	250	300	350	400	30	50	100	150	200	250	300	350	400	450	500
Weight [kg]	1.2	1.3	1.5	1.7	1.9	2.1	2.3	2.4	2.6	2.3	2.4	2.7	3.2	3.5	3.8	4.1	4.3	4.6	4.9	5.2

Additional Weight

[kg]

Size		25	32
Lock		0.30	0.60
Rod end male thread	Male thread	0.03	0.03
	Nut	0.02	0.02
Foot bracket (2 sets including mounting bolt)		0.08	0.14
Rod flange (including mounting bolt)		0.17	0.20
Head flange (including mounting bolt)			
Double clevis (including pin, retaining ring, and mounting bolt)		0.16	0.22

Specifications

Model			LEY63V8 (Top/Parallel)				LEY63DV8 (In-line)		
Actuator specifications	Work load [kg]	Horizontal*1	40	70	80	200	40	70	80
		Vertical	19	38	72	115	19	38	72
	Force [N]/Set value*2 : 45 to 150 %*3		156 to 521	304 to 1012	573 to 1910	1003 to 3343	156 to 521	304 to 1012	573 to 1910
	Max. speed*4 [mm/s] / Stroke range	Up to 500	1000	500	250	70	1000	500	250
		505 to 600	800	400	200		800	400	200
		605 to 700	600	300	150		600	300	150
		705 to 800	500	250	125		500	250	125
	Pushing speed [mm/s]*5		30 or less						
	Max. acceleration/deceleration [mm/s²]		5000			3000	5000		
	Positioning repeatability [mm]	Basic type	±0.02						
		High-precision type	±0.01						
	Lost motion [mm]*6	Basic type	0.1 or less						
		High-precision type	0.05 or less						
	Screw lead [mm] (including pulley ratio)		20	10	5	5 (2.86)	20	10	5
	Impact/Vibration resistance [m/s²]*7		50/20						
	Actuation type		Ball screw			Ball screw + Belt (Pulley ratio 4:7)	Ball screw		
	Guide type		Sliding bushing (Piston rod)						
	Operating temperature range [°C]		5 to 40						
	Operating humidity range [%RH]		90 or less (No condensation)						
	Conditions for*8 "Regenerative resistor" [kg]	Horizontal	Not required						
		Vertical	2.5 or more						
Electric specifications	Motor output/Size		400 W/□60						
	Motor type		AC servo motor (200 VAC)						
	Encoder		Absolute 20-bit encoder (Resolution: 1048576 p/rev)						
	Power consumption [W]*9	Horizontal	210						
		Vertical	230						
	Standby power consumption when operating [W]*10	Horizontal	2						
		Vertical	18						
	Max. instantaneous power consumption [W]*11		1275						
Lock unit specifications	Type*12		Non-magnetising lock						
	Holding force [N]		313	607	1146	2006	313	607	1146
	Power consumption [W] at 20 °C*13		6						
	Rated voltage [V]		24 VDC $^{+10\ \%}_{0}$						

*1 This is the maximum value of the horizontal work load. An external guide is necessary to support the load. The actual work load changes according to the condition of the external guide. Confirm the load using the actual device.
*2 Set values for the driver
*3 The force setting range (set values for the driver) for the force control with the torque control mode. The force and duty ratio change according to the set value. Set it with reference to "Force Conversion Graph (Guide)" on page 52.
*4 The allowable speed changes according to the stroke.
*5 The allowable collision speed for collision with the workpiece with the torque control mode
*6 A reference value for correcting an error in reciprocal operation
*7 Impact resistance: No malfunction occurred when the actuator was tested with a drop tester in both an axial direction and a perpendicular direction to the lead screw. (The test was performed with the actuator in the initial state.)
Vibration resistance: No malfunction occurred in a test ranging between 45 to 2000 Hz. The test was performed in both an axial direction and a perpendicular direction to the lead screw. (The test was performed with the actuator in the initial state.)
*8 The work load conditions which require "Regenerative resistor" when operating at the maximum speed (Duty ratio: 100 %)
*9 The power consumption (including the driver) is for when the actuator is operating.
*10 The standby power consumption when operating (including the driver) is for when the actuator is stopped in the set position during the operation.
*11 The maximum instantaneous power consumption (including the driver) is for when the actuator is operating.
*12 Only when motor option "With lock" is selected
*13 For an actuator with lock, add the power consumption for the lock.

Weight

Product Weight [kg]

Series	LEY63V8 (Motor mounting position: Top/Parallel)												
Stroke [mm]	50	100	150	200	250	300	350	400	450	500	600	700	800
Weight [kg]	4.8	5.3	6.0	6.5	7.7	8.2	8.8	9.3	9.9	10.4	12.1	13.3	14.4

Series	LEY63DV8 (Motor mounting position: In-line)												
Stroke [mm]	50	100	150	200	250	300	350	400	450	500	600	700	800
Weight [kg]	5.0	5.5	6.1	6.6	7.8	8.3	9.0	9.5	10.1	10.6	12.3	13.4	14.6

Additional Weight [kg]

Size		63
Lock		0.6
Rod end male thread	Male thread	0.12
	Nut	0.04
Foot bracket (2 sets including mounting bolt)		0.26
Rod flange (including mounting bolt)		0.51
Double clevis (including pin, retaining ring, and mounting bolt)		0.58

Construction

Motor top mounting type: LEY 25 / 32 / 63

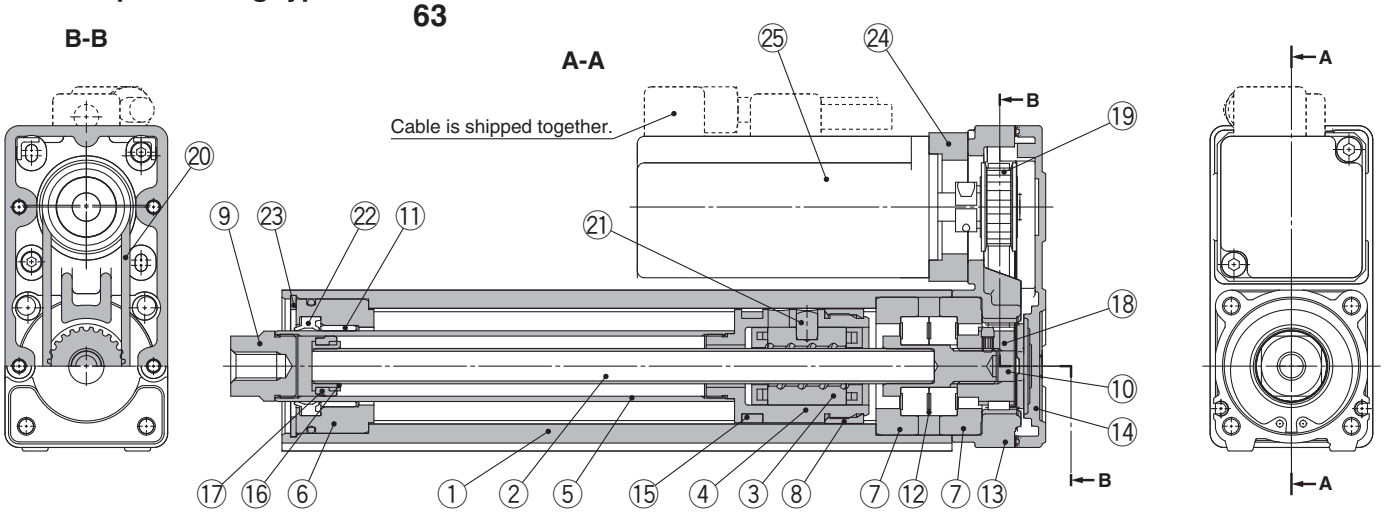

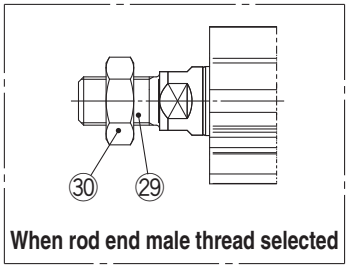

In-line motor type: LEY 25 / 32D / 63

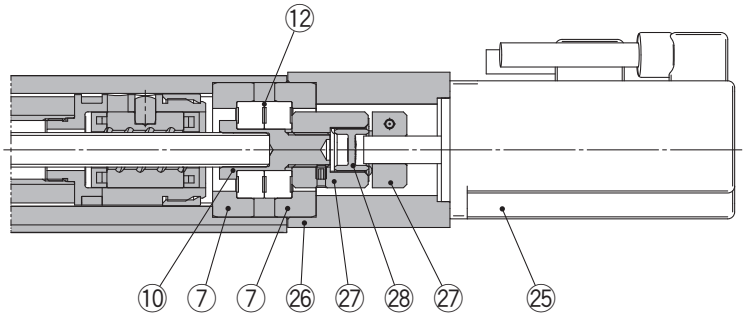

Component Parts

No.	Description	Material	Note
1	**Body**	Aluminium alloy	Anodised
2	**Ball screw shaft**	Alloy steel	
3	**Ball screw nut**	Resin/Alloy steel	
4	**Piston**	Aluminium alloy	
5	**Piston rod**	Stainless steel	Hard chrome plating
6	**Rod cover**	Aluminium alloy	
7	**Bearing holder**	Aluminium alloy	
8	**Rotation stopper**	POM	
9	**Socket**	Free cutting carbon steel	Nickel plating
10	**Connected shaft**	Free cutting carbon steel	Nickel plating
11	**Bushing**	Bearing alloy	
12	**Bearing**	—	
13	**Return box**	Aluminium die-cast	Coating
14	**Return plate**	Aluminium die-cast	Coating
15	**Magnet**	—	
16	**Wear ring holder**	Stainless steel	Stroke 101 mm or more
17	**Wear ring**	POM	Stroke 101 mm or more
18	**Screw shaft pulley**	Aluminium alloy	

No.	Description	Material	Note
19	**Motor pulley**	Aluminium alloy	
20	**Belt**	—	
21	**Parallel pin**	Stainless steel	
22	**Seal**	NBR	
23	**Retaining ring**	Steel for spring	Phosphate coated
24	**Motor adapter**	Aluminium alloy	Coating
25	**Motor**	—	
26	**Motor block**	Aluminium alloy	Coating
27	**Hub**	Aluminium alloy	
28	**Spider**	Urethane	
29	**Socket (Male thread)**	Free cutting carbon steel	Nickel plating
30	**Nut**	Alloy steel	Zinc chromated

Replacement Parts (Motor top/parallel only)/Belt

No.	Size	Order no.
20	**25**	LE-D-2-2
	32	LE-D-2-4

No.	Size	Lead	Order no.
20	**63**	A/B/C	LE-D-2-5
		L	LE-D-2-6

Dimensions: Motor Top/Parallel

∗1 Range within which the rod can move
Make sure workpieces mounted on the rod do not interfere with the workpieces and facilities around the rod.
∗2 The direction of rod end width across flats (□K) differs depending on the products.

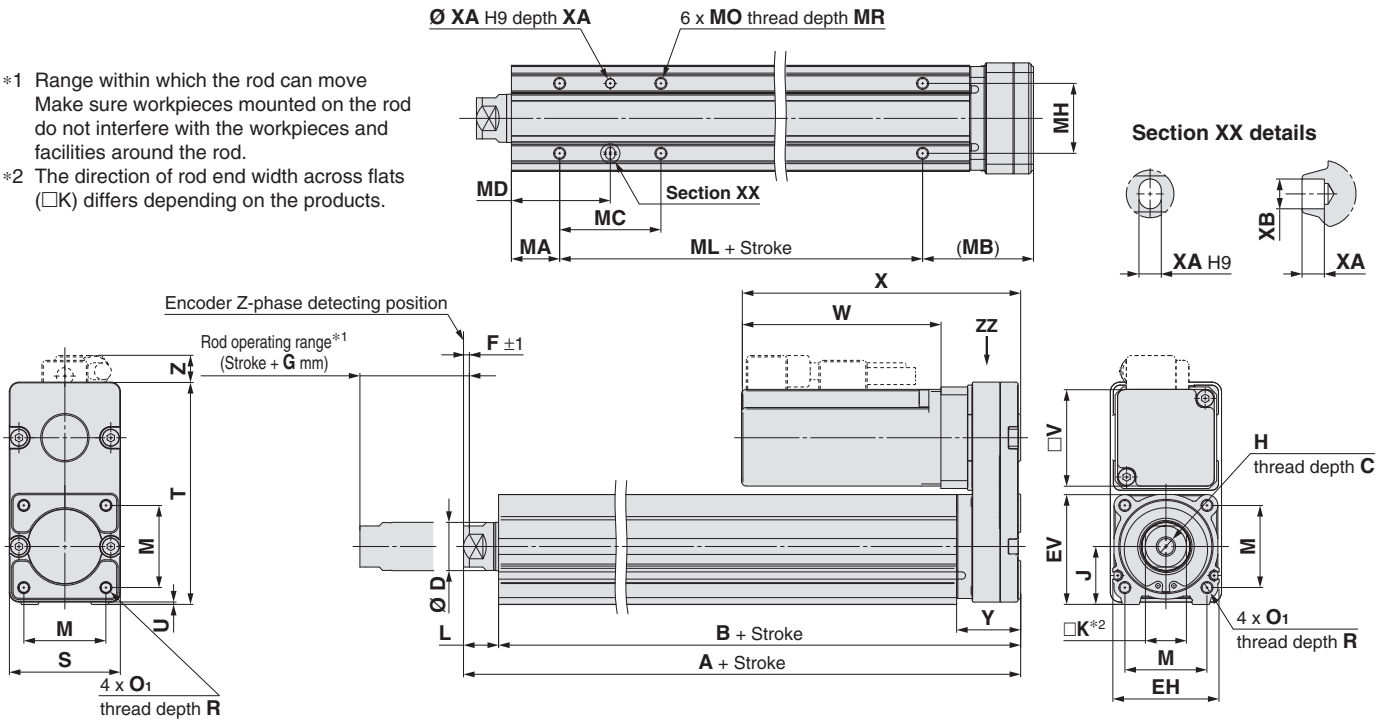

IP65 equivalent (Dust-tight/Water-jet-proof): LEY63□□□-□P

(View ZZ)

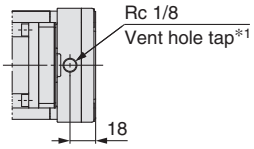

∗1 When using the dust-tight/water-jet-proof (IP65 equivalent), correctly mount the fitting and tubing to the vent hole tap, and then place the end of the tubing in an area not exposed to dust or water. The fitting and tubing should be provided separately by the customer.
Select [Applicable tubing O.D.: Ø 4 or more, Connection thread: Rc1/8].

[mm]

Size	Stroke range [mm]	A	B	C	D	EH	EV	H	J	K	L	M	O_1	R	S	T	U	Y	V
25	15 to 100	130.5	116	13	20	44	45.5	M8 x 1.25	24	17	14.5	34	M5 x 0.8	8	46	92	1	26.5	40
	105 to 400	155.5	141																
32	20 to 100	148.5	130	13	25	51	56.5	M8 x 1.25	31	22	18.5	40	M6 x 1.0	10	60	118	1	34	60
	105 to 500	178.5	160																
63	Up to 200	192.6	155.2	21	40	76	82	M16 x 2	44	36	37.4	60	M8 x 1.25	16	80	146	4	32.2	60
	205 to 500	227.6	190.2																
	505 to 800	262.6	225.2																

Size	Stroke range [mm]	Without lock			With lock			F	G
		W	X	Z	W	X	Z		
25	15 to 100	82.5	115.5	11	127.5	160.5	11	2	4
	105 to 400								
32	20 to 100	80	120	14	120	160	14	2	4
	105 to 500								
63	50 to 200	98.5	138.5	12.5 (13.5)∗1	138.5	178.5	12.5 (13.5)∗1	4	8
	205 to 500								
	505 to 800								

∗1 L lead

Body Bottom Tapped

[mm]

Size	Stroke range [mm]	MA	MB	MC	MD	MH	ML	MO	MR	XA	XB
25	15 to 35	20	46	24	32	29	50	M5 x 0.8	6.5	4	5
	40 to 100			42	41						
	105 to 120						75				
	125 to 200			59	49.5						
	205 to 400			76	58						
32	20 to 35	25	55	22	36	30	50	M6 x 1	8.5	5	6
	40 to 100			36	43						
	105 to 120						80				
	125 to 200			53	51.5						
	205 to 500			70	60						
63	50 to 70	38	52.2	24	50	44	65	M8 x 1.25	10	6	7
	75 to 120			45	60.5						
	125 to 200			58	67						
	205 to 500			86	81		100				
	505 to 800						135				

Dimensions: Motor Top/Parallel

Motor left side parallel type: LEY 25 32 63 L

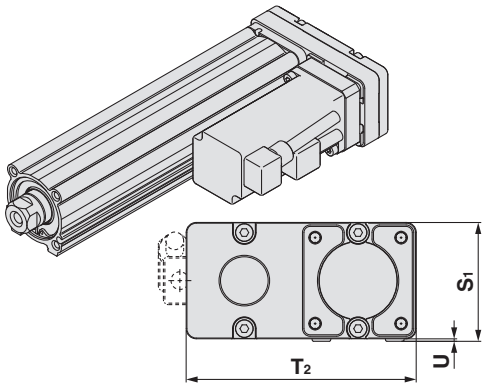

Motor right side parallel type: LEY 25 32 63 R

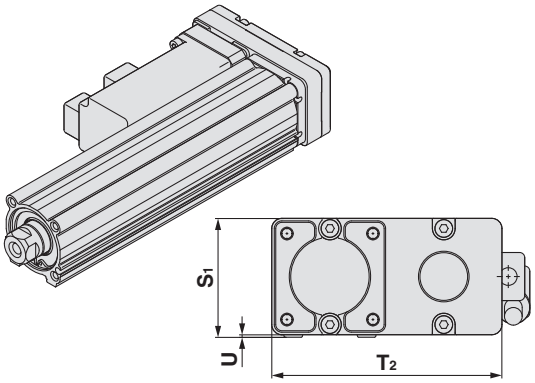

[mm]

Size	S_1	T_2	U
25	47	91	1
32	61	117	1
63	84	142	4

∗ When the motor is mounted on the left or right side in parallel, the groove for auto switch on the side to which the motor is mounted is hidden.

Dimensions: In-line Motor

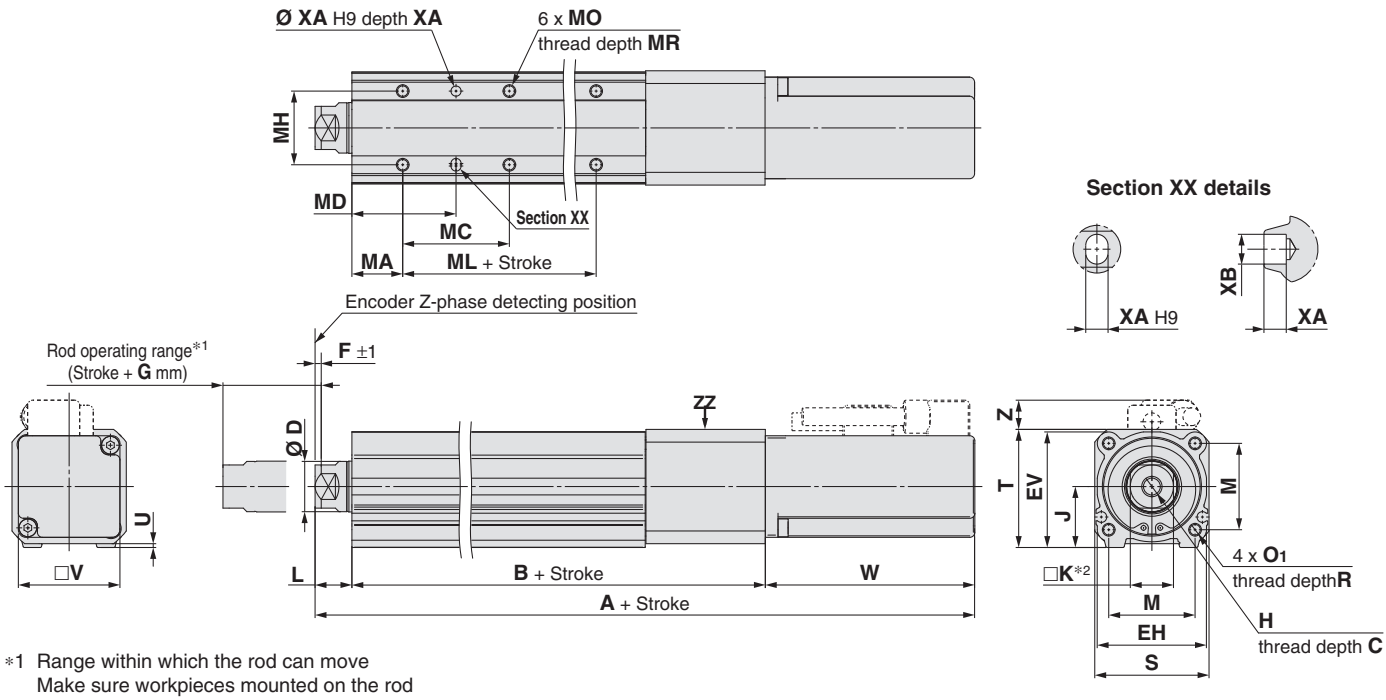

*1 Range within which the rod can move
Make sure workpieces mounted on the rod do not interfere with the workpieces and facilities around the rod.

*2 The direction of rod end width across flats (□K) differs depending on the products.

[mm]

Size	Stroke range [mm]	C	D	EH	EV	H	J	K	L	M	O1	R	S	T	U	B	V
25	15 to 100	13	20	44	45.5	M8 x 1.25	24	17	14.5	34	M5 x 0.8	8	45	46.5	1.5	136.5	40
	105 to 400															161.5	
32	20 to 100	13	25	51	56.5	M8 x 1.25	31	22	18.5	40	M6 x 1.0	10	60	61	1	156	60
	105 to 500															186	
63	50 to 200	21	40	76	82	M16 x 2	44	36	37.4	60	M8 x 1.25	16	78	83	5	190.7	60
	205 to 500															225.7	
	505 to 800															260.7	

Size	Stroke range [mm]	Without lock			With lock			F	G
		A	W	Z	A	W	Z		
25	15 to 100	233.5	82.5	11.5	278.5	127.5	11.5	2	4
	105 to 400	258.5			303.5				
32	20 to 100	254.5	80	14	294.5	120	14	2	4
	105 to 500	284.5			324.5				
63	50 to 200	326.6	98.5	5	366.6	138.5	5	4	8
	205 to 500	361.6			401.6				
	505 to 800	396.6			436.6				

Body Bottom Tapped

[mm]

Size	Stroke range [mm]	MA	MC	MD	MH	ML	MO	MR	XA	XB
25	15 to 35	20	24	32	29	50	M5 x 0.8	6.5	4	5
	40 to 100		42	41						
	105 to 120					75				
	125 to 200		59	49.5						
	205 to 400		76	58						
32	20 to 35	25	22	36	30	50	M6 x 1	8.5	5	6
	40 to 100		36	43						
	105 to 120					80				
	125 to 200		53	51.5						
	205 to 500		70	60						
63	50 to 70	38	24	50	44	65	M8 x 1.25	10	6	7
	75 to 120		45	60.5						
	125 to 200		58	67						
	205 to 500		86	81		100				
	505 to 800					135				

IP65 equivalent (Dust-tight/Water-jet-proof): LEY63D□□-□P

(View ZZ)

∗ **LEY63 only**

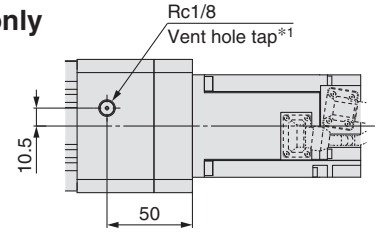

*1 When using the dust-tight/water-jet-proof (IP65 equivalent), correctly mount the fitting and tubing to the vent hole tap, and then place the end of the tubing in an area not exposed to dust or water. The fitting and tubing should be provided separately by the customer.
Select [Applicable tubing O.D.: Ø 4 or more, Connection thread: Rc1/8].

Dimensions

End male thread: LEY 25/32/63 □□ A/B/C/L -□□M

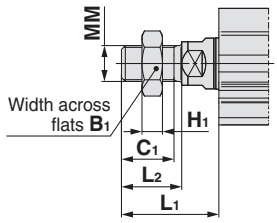

∗ Refer to page 97 for details on the rod end nut and mounting bracket.
∗ Refer to the precautions on page 187 when mounting end brackets such as knuckle joint or workpieces.

[mm]

Size	B_1	C_1	H_1	L_1∗1	L_2	MM
25	22	20.5	8	38	23.5	M14 x 1.5
32	22	20.5	8	42.0	23.5	M14 x 1.5
63	27	26	11	76.4	39	M18 x 1.5

∗1 The L_1 measurement is when the unit is in the Z-phase first detecting position. At this position, 2 mm at the end (size 25, 32) and 4 mm at the end (size 63).

Foot: LEY 25/32/63 □□ A/B/C/L -□□□L

Included parts
·Foot bracket
·Body mounting bolt

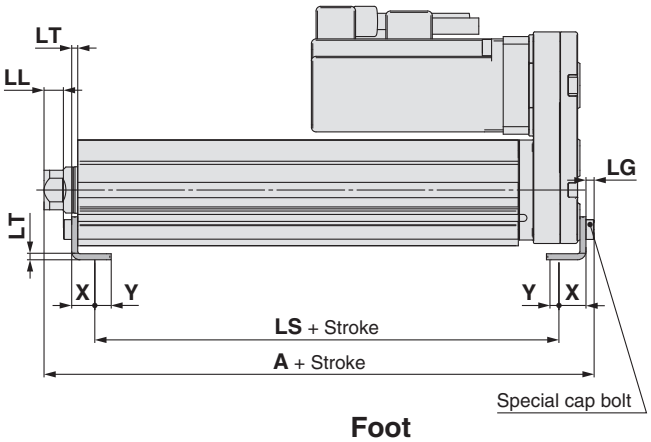

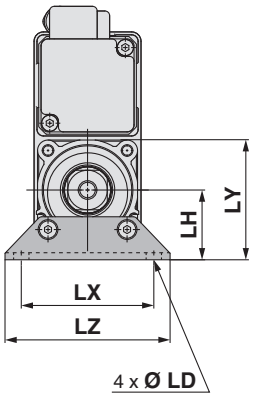

Outward mounting

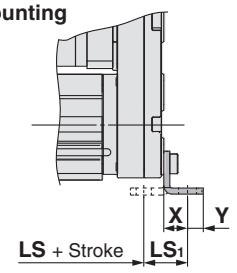

Foot [mm]

Size	Stroke range [mm]	A	LS	LS_1	LL	LD	LG	LH	LT	LX	LY	LZ	X	Y
25	15 to 100	136.6	98.8	19.8	8.4	6.6	3.5	30	2.6	57	51.5	71	11.2	5.8
	105 to 400	161.6	123.8											
32	20 to 100	155.7	114	19.2	11.3	6.6	4	36	3.2	76	61.5	90	11.2	7
	105 to 500	185.7	144											
63	50 to 200	200.8	133.2	25.2	29.2	8.6	5	50	3.2	95	88	110	14.2	8
	205 to 500	235.8	168.2											
	505 to 800	270.8	203.2											

Material: Carbon steel (Chromate treated)
∗ The A measurement is when the unit is in the Z-phase first detecting position. At this position, 2 mm at the end (size 25, 32) and 4 mm at the end (size 63).
∗ When the motor mounting is the right or left side parallel type, the head side foot bracket should be mounted outward.

Dimensions

Rod flange: LEY 25/32/63 □□A/B/C/L-□□□F

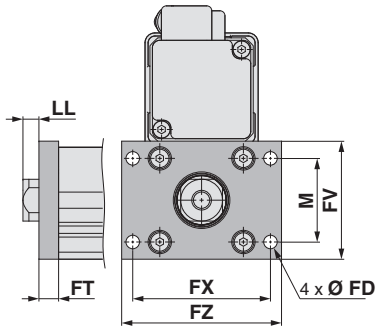

Head flange: LEY 25/32/63 □□A/B/C/L-□□□G

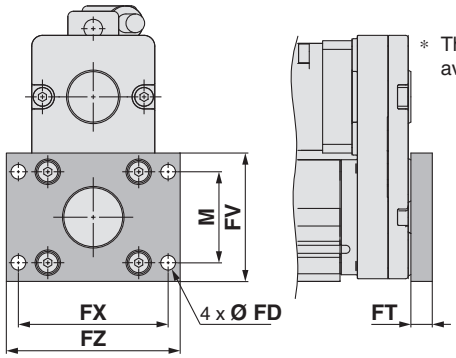

∗ The head flange type is not available for the LEY32/LEY63.

Included parts
·Flange
·Body mounting bolt

Rod/Head Flange [mm]

Size	FD	FT	FV	FX	FZ	LL	M
25	5.5	8	48	56	65	6.5	34
32	5.5	8	54	62	72	10.5	40
63	9	9	80	92	108	28.4	60

Material: Carbon steel (Nickel plating)

∗ The LL measurement is when the unit is in the Z-phase first detecting position. At this position, 2 mm at the end (size 25, 32) and 4 mm at the end (size 63).

Double clevis: LEY 25/32/63 □□A/B/C/L-□□□D

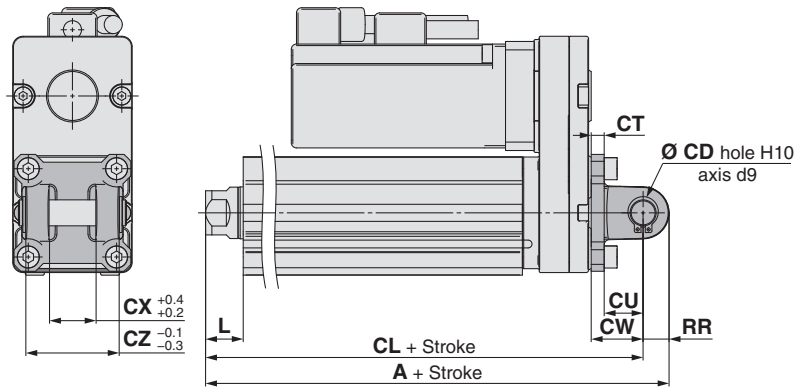

∗ Refer to page 97 for details on the rod end nut and mounting bracket.

Included parts
· Double clevis
· Body mounting bolt
· Clevis pin
· Retaining ring

Double Clevis [mm]

Size	Stroke range [mm]	A	CL	CD	CT	CU	CW	CX	CZ	L	RR
25	15 to 100	160.5	150.5	10	5	14	20	18	36	14.5	10
	105 to 200	185.5	175.5								
32	20 to 100	180.5	170.5	10	6	14	22	18	36	18.5	10
	105 to 200	210.5	200.5								
63	50 to 200	236.6	222.6	14	8	22	30	22	44	37.4	14
	205 to 500	271.6	257.6	—	—						
	505 to 800	306.6	292.6	—	—						

Material: Cast iron (Coating)

∗ The A and CL measurements are when the unit is in the Z-phase first detecting position. At this position, 2 mm at the end (size 25, 32) and 4 mm at the end (size 63).

Accessory Mounting Brackets

Accessory Brackets/Support Brackets

Single Knuckle Joint

∗ If a knuckle joint is used, select the body option [end male thread].

I-G02

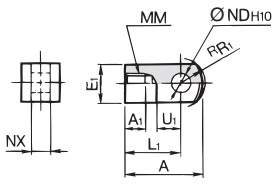

Material: Carbon steel

I-G04

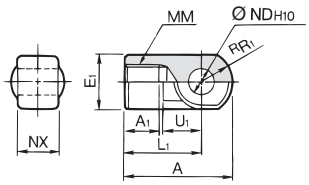

Material: Cast iron

[mm]

Part no.	Applicable size	A	A_1	E_1	L_1	MM	R_1	U_1	ND_{H10}	NX
I-G02	**16**	34	8.5	□16	25	M8 x 1.25	10.3	11.5	$8^{+0.058}_{0}$	$8^{-0.2}_{-0.4}$
I-G04	**25, 32, 40**	42	14	Ø 22	30	M14 x 1.5	12	14	$10^{+0.058}_{0}$	$18^{-0.3}_{-0.5}$
I-G05	**63**	56	18	Ø 28	40	M18 x 1.5	16	20	$14^{+0.070}_{0}$	$22^{-0.3}_{-0.5}$

Knuckle Pin

∗ Common with double clevis pin

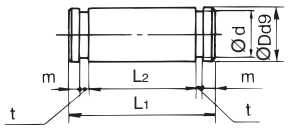

Material: Carbon steel

[mm]

Part no.	Applicable size	Dd9	L_1	L_2	d	m	t	Retaining ring
IY-G02	**16**	$8^{-0.040}_{-0.076}$	21	16.2	7.6	1.5	0.9	Type C retaining ring 8
IY-G04	**25, 32, 40**	$10^{-0.040}_{-0.076}$	41.6	36.2	9.6	1.55	1.15	Type C retaining ring 10
IY-G05	**63**	$14^{-0.050}_{-0.093}$	50.6	44.2	13.4	2.05	1.15	Type C retaining ring 14

Mounting Bracket Part Nos.

Mounting bracket	Order qty.	Applicable size				Contents
		16	**25**	**32, 40**	**63**	
Foot	2∗1	LEY-L016	LEY-L025	LEY-L032	LEY-L063	Foot bracket x 2 Mounting bolt x 4
Flange	1	LEY-F016	LEY-F025	LEY-F032	LEY-F063	Flange x 1 Mounting bolt x 4
Double clevis	1	LEY-D016	LEY-D025	LEY-D032	LEY-D063	Clevis x 1 Mounting bolt x 4 Clevis pin x 1 Type C retaining ring for axis x 2

∗1 When ordering foot brackets, order 2 pieces per actuator.

Double Knuckle Joint

Y-G02

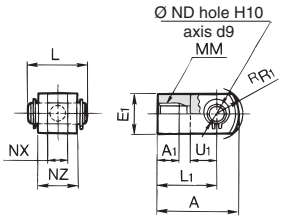

Material: Carbon steel

Y-G04

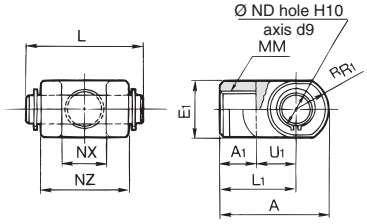

Material: Cast iron

∗ Knuckle pin and retaining ring are included. [mm]

Part no.	Applicable size	A	A_1	E_1	L_1	MM	R_1
Y-G02	**16**	34	8.5	□16	25	M8 x 1.25	10.3
Y-G04	**25, 32, 40**	42	16	Ø 22	30	M14 x 1.5	12
Y-G05	**63**	56	20	Ø 28	40	M18 x 1.5	16

Part no.	Applicable size	U_1	ND_{H10}	NX	NZ	L	Applicable pin part no.
Y-G02	**16**	11.5	$8^{+0.058}_{0}$	$8^{+0.4}_{+0.2}$	16	21	**IY-G02**
Y-G04	**25, 32, 40**	14	$10^{+0.058}_{0}$	$18^{+0.5}_{+0.3}$	36	41.6	**IY-G04**
Y-G05	**63**	20	$14^{+0.070}_{0}$	$22^{+0.5}_{+0.3}$	44	50.6	**IY-G05**

Rod End Nut

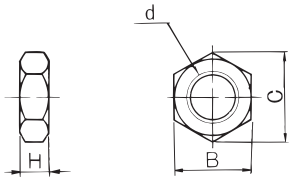

Material: Carbon steel

[mm]

Part no.	Applicable size	d	H	B	C
NT-02	**16**	M8 x 1.25	5	13	15.0
NT-04	**25, 32, 40**	M14 x 1.5	8	22	25.4
NT-05	**63**	M18 x 1.5	11	27	31.2

Simple Joint Brackets

* The joint is not included in type A and type B mounting brackets. Therefore, it must be ordered separately.

Joint and Mounting Bracket (Type A/B)/Part No.

Joint **LEY-U025**

Applicable size

025	25, 32, 40

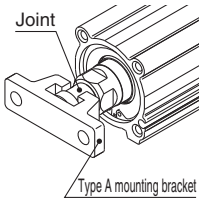

Mounting bracket **YA-03**

Mounting bracket

YA	Type A mounting bracket
YB	Type B mounting bracket

Applicable size

03	25, 32, 40

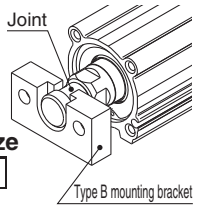

Allowable Eccentricity [mm]

Applicable size	25	32	40
Eccentricity tolerance	±1		
Backlash	0.5		

<How to Order>
- The joint is not included in type A and type B mounting brackets. Therefore, it must be ordered separately.

Example) Order no.
- Joint..... LEY-U025
- Type A mounting bracket YA-03

Joint and Mounting Bracket (Type A/B)/Part No.

Applicable size	Joint part no.	Applicable mounting bracket part no.	
		Type A mounting bracket	Type B mounting bracket
25, 32, 40	LEY-U025	YA-03	YB-03

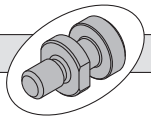

Joint

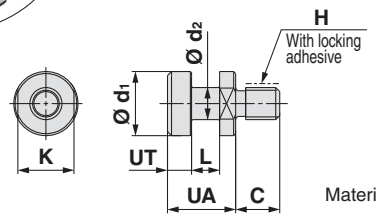

Material: Stainless steel

[mm]

Part no.	Applicable size	UA	C	d_1	d_2	H	K	L	UT	Weight [g]
LEY-U025	**25, 32, 40**	17	11	16	8	M8 x 1.25	14	7	6	22

Type A Mounting Bracket

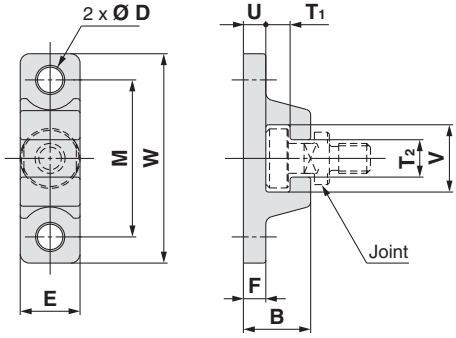

Material: Chromium molybdenum steel

[mm]

Part no.	Applicable size	B	D	E	F	M	T_1	T_2	U
YA-03	**25, 32, 40**	18	6.8	16	6	42	6.5	10	6

Part no.	Applicable size	V	W	Weight [g]
YA-03	**25, 32, 40**	18	56	55

Type B Mounting Bracket

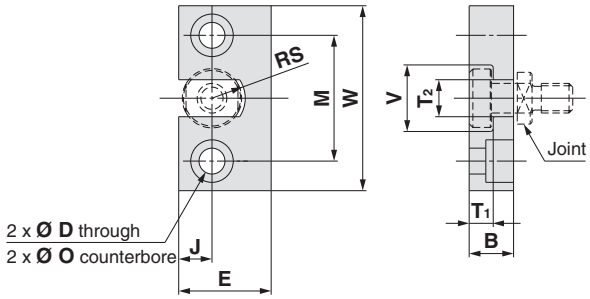

Material: Stainless steel

[mm]

Part no.	Applicable size	B	D	E	J	M	Ø O
YB-03	**25, 32, 40**	12	7	25	9	34	11.5 depth 7.5

Part no.	Applicable size	T_1	T_2	V	W	RS	Weight [g]
YB-03	**25, 32, 40**	6.5	10	18	50	9	80

Floating Joints (Refer to the **Web Catalogue** for details.)

●For Male Thread/JC (Light weight type)

- **With the aluminium case**

●For Male Thread/JA

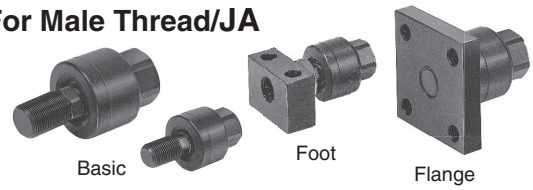

●For Male Thread/JS (Stainless steel)

- **Stainless steel 304 (Appearance)**
- **Dust cover**
  Fluororubber/Silicone rubber

Applicable size	Thread size
16	M8 x 1.25
25, 32, 40	M14 x 1.5
63	M18 x 1.5

●For Female Thread/JB

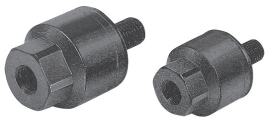

Applicable size	Thread size
16	M5 x 0.8
25, 32, 40	M8 x 1.25
63	M16 x 2

LEY Series
Auto Switch Mounting

Proper Auto Switch Mounting Position

Applicable auto switches: D-M9□(V), D-M9□E(V), D-M9□W(V), D-M9□A(V)

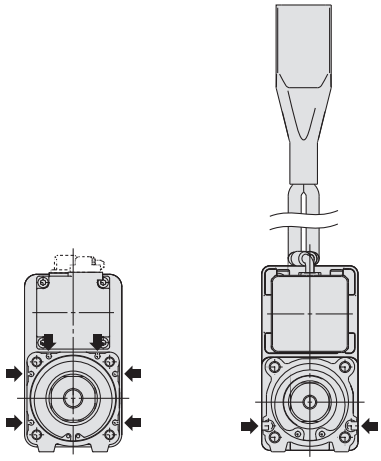

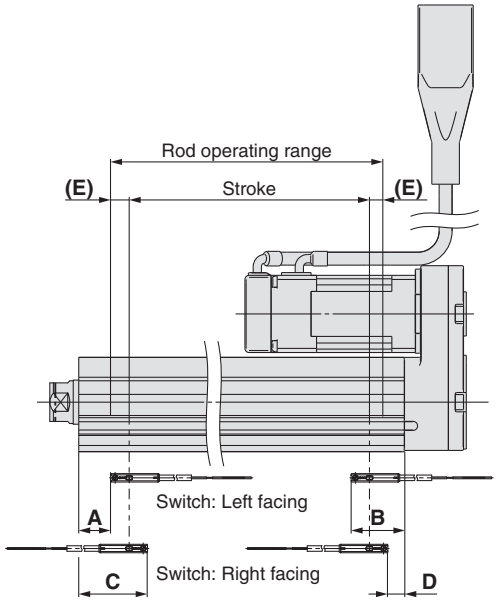

[mm]

Size	Stroke range	Auto switch position				Return to origin distance	Operating range
		Mounting: Left facing		Mounting: Right facing			
		A	B	C	D	E	—
16	10 to 100	21.5	46.5	33.5	34.5	(2)	2.9
	105 to 300	41.5		53.5			
25	15 to 100	27	62.5	39	50.5	(2)	4.2
	105 to 400	52		64			
32/40	20 to 100	30.5	65.5	42.5	53.5	(2)	4.9
	105 to 500	60.5		72.5			
63	50 to 200	37	86	49	74	(4)	9.8
	205 to 500	72		84			
	505 to 800	107		119			

∗1 Figures in the table above are used as a reference when mounting the auto switches for stroke end detection. Adjust the auto switch after confirming the operating condition in the actual setting.
∗2 Switches cannot be mounted on the motor mounting side surface.
∗3 For the LEYG with a guide, switches cannot be mounted on the guide attachment side (rod side).
∗4 Since the operating range is provided as a guideline including hysteresis, it cannot be guaranteed (assuming approximately ±30% dispersion). It may change substantially depending on the ambient environment.

Auto Switch Mounting

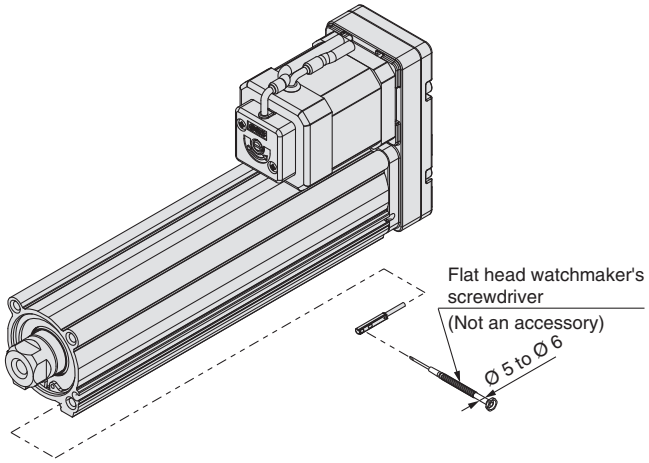

Auto Switch Mounting Screw Tightening Torque

[N·m]

Auto switch model	Tightening torque
D-M9□(V) **D-M9□E(V)** **D-M9□W(V)**	0.05 to 0.15
D-M9□A(V)	0.05 to 0.10

∗ When tightening the auto switch mounting screw (included with auto switch), use a watchmaker's screwdriver with a handle diameter of about 5 to 6 mm.

Solid State Auto Switch
Direct Mounting Type
D-M9N(V)/D-M9P(V)/D-M9B(V)

Refer to the SMC website for details on products that are compliant with international standards.

Grommet

- **2-wire load current is reduced (2.5 to 40 mA).**
- **Using flexible cable as standard spec.**

⚠Caution

Precautions

Fix the auto switch with the existing screw installed on the auto switch body. The auto switch may be damaged if a screw other than the one supplied is used.

Auto Switch Specifications

PLC: Programmable Logic Controller

D-M9□, D-M9□V (With indicator light)						
Auto switch model	D-M9N	D-M9NV	D-M9P	D-M9PV	D-M9B	D-M9BV
Electrical entry direction	In-line	Perpendicular	In-line	Perpendicular	In-line	Perpendicular
Wiring type	3-wire				2-wire	
Output type	NPN		PNP		—	
Applicable load	IC circuit, Relay, PLC				24 VDC relay, PLC	
Power supply voltage	5, 12, 24 VDC (4.5 to 28 V)				—	
Current consumption	10 mA or less				—	
Load voltage	28 VDC or less		—		24 VDC (10 to 28 VDC)	
Load current	40 mA or less				2.5 to 40 mA	
Internal voltage drop	0.8 V or less at 10 mA (2 V or less at 40 mA)				4 V or less	
Leakage current	100 μA or less at 24 VDC				0.8 mA or less	
Indicator light	Red LED illuminates when turned ON.					
Standard	CE marking, RoHS					

Oilproof Heavy-duty Lead Wire Specifications

Auto switch model		D-M9N(V)	D-M9P(V)	D-M9B(V)
Sheath	Outside diameter [mm]	2.6		
Insulator	Number of cores	3 cores (Brown/Blue/Black)		2 cores (Brown/Blue)
	Outside diameter [mm]	0.88		
Conductor	Effective area [mm²]	0.15		
	Strand diameter [mm]	0.05		
Minimum bending radius [mm] (Reference values)		17		

∗ Refer to the **Web Catalogue** for solid state auto switch common specifications.
∗ Refer to the **Web Catalogue** for lead wire lengths.

Weight

[g]

Auto switch model		D-M9N(V)	D-M9P(V)	D-M9B(V)
Lead wire length	0.5 m (—)	8		7
	1 m (**M**)	14		13
	3 m (**L**)	41		38
	5 m (**Z**)	68		63

Dimensions

[mm]

D-M9□

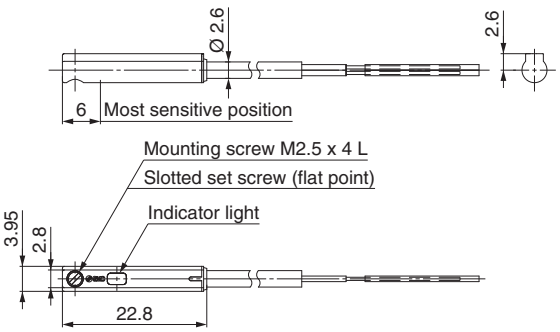

D-M9□V

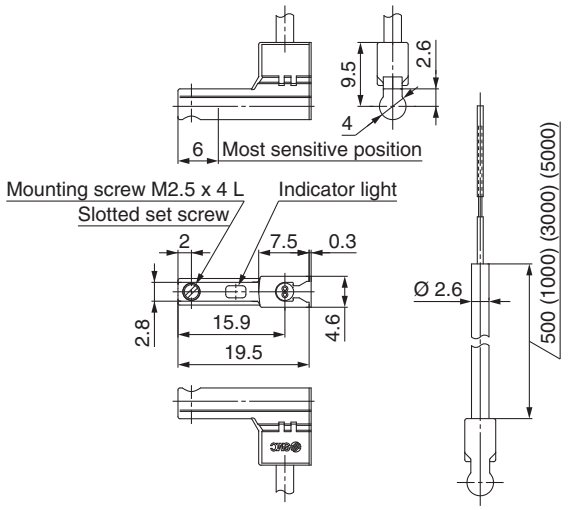

SMC

Normally Closed Solid State Auto Switch Direct Mounting Type
D-M9NE(V)/D-M9PE(V)/D-M9BE(V)

RoHS

Refer to the SMC website for details on products that are compliant with international standards.

Grommet

- **Output signal turns on when no magnetic force is detected.**
- **Can be used for the actuator adopted by the solid state auto switch D-M9 series (excluding special order products)**

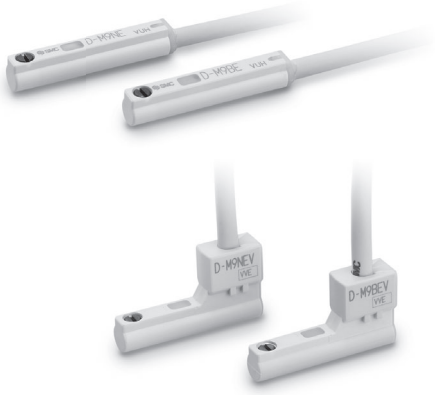

Auto Switch Specifications

PLC: Programmable Logic Controller

D-M9□E, D-M9□EV (With indicator light)						
Auto switch model	D-M9NE	D-M9NEV	D-M9PE	D-M9PEV	D-M9BE	D-M9BEV
Electrical entry direction	In-line	Perpendicular	In-line	Perpendicular	In-line	Perpendicular
Wiring type	3-wire				2-wire	
Output type	NPN		PNP		—	
Applicable load	IC circuit, Relay, PLC				24 VDC relay, PLC	
Power supply voltage	5, 12, 24 VDC (4.5 to 28 V)				—	
Current consumption	10 mA or less				—	
Load voltage	28 VDC or less		—		24 VDC (10 to 28 VDC)	
Load current	40 mA or less				2.5 to 40 mA	
Internal voltage drop	0.8 V or less at 10 mA (2 V or less at 40 mA)				4 V or less	
Leakage current	100 μA or less at 24 VDC				0.8 mA or less	
Indicator light	Red LED illuminates when turned ON.					
Standard	CE marking, RoHS					

Oilproof Heavy-duty Lead Wire Specifications

Auto switch model		D-M9NE(V)	D-M9PE(V)	D-M9BE(V)
Sheath	Outside diameter [mm]	2.6		
Insulator	Number of cores	3 cores (Brown/Blue/Black)		2 cores (Brown/Blue)
	Outside diameter [mm]	0.88		
Conductor	Effective area [mm²]	0.15		
	Strand diameter [mm]	0.05		
Minimum bending radius [mm] (Reference values)		17		

∗ Refer to the **Web Catalogue** for solid state auto switch common specifications.
∗ Refer to the **Web Catalogue** for lead wire lengths.

⚠Caution

Precautions

Fix the auto switch with the existing screw installed on the auto switch body. The auto switch may be damaged if a screw other than the one supplied is used.

Weight

[g]

Auto switch model		D-M9NE(V)	D-M9PE(V)	D-M9BE(V)
Lead wire length	0.5 m (—)	8		7
	1 m (**M**)∗1	14		13
	3 m (**L**)	41		38
	5 m (**Z**)∗1	68		63

∗1 The 1 m and 5 m options are produced upon receipt of order.

Dimensions

[mm]

D-M9□E

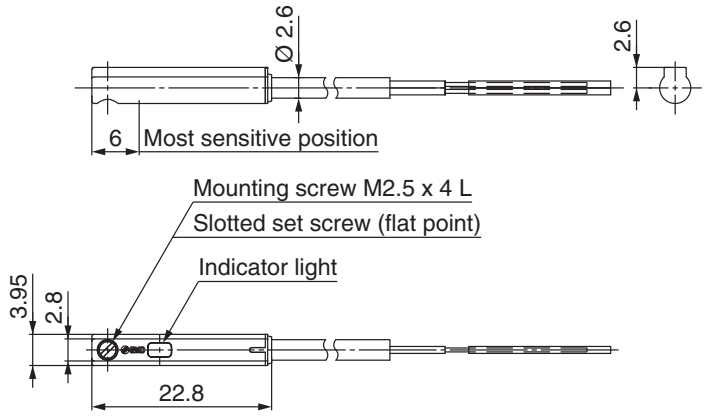

D-M9□EV

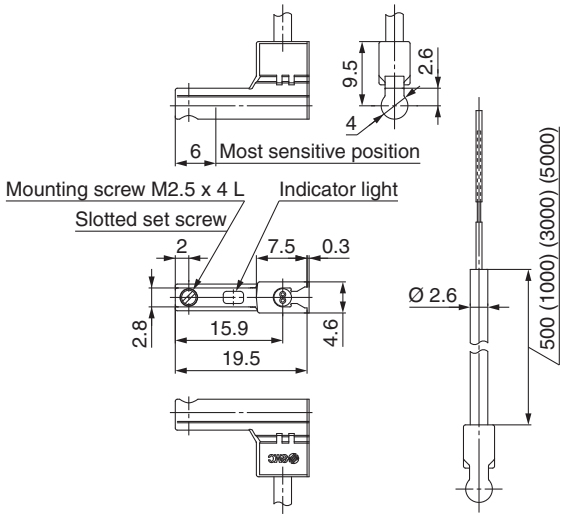

2-Colour Indicator Solid State Auto Switch Direct Mounting Type
D-M9NW(V)/D-M9PW(V)/D-M9BW(V)

Refer to the SMC website for details on products that are compliant with international standards.

Grommet

- **2-wire load current is reduced (2.5 to 40 mA).**
- **Using flexible cable as standard spec.**
- **The proper operating range can be determined by the colour of the light. (Red → Green ← Red)**

⚠Caution

Precautions

Fix the auto switch with the existing screw installed on the auto switch body. The auto switch may be damaged if a screw other than the one supplied is used.

Auto Switch Specifications

PLC: Programmable Logic Controller

D-M9□W, D-M9□WV (With indicator light)						
Auto switch model	D-M9NW	D-M9NWV	D-M9PW	D-M9PWV	D-M9BW	D-M9BWV
Electrical entry direction	In-line	Perpendicular	In-line	Perpendicular	In-line	Perpendicular
Wiring type	3-wire				2-wire	
Output type	NPN		PNP		—	
Applicable load	IC circuit, Relay, PLC				24 VDC relay, PLC	
Power supply voltage	5, 12, 24 VDC (4.5 to 28 V)				—	
Current consumption	10 mA or less				—	
Load voltage	28 VDC or less		—		24 VDC (10 to 28 VDC)	
Load current	40 mA or less				2.5 to 40 mA	
Internal voltage drop	0.8 V or less at 10 mA (2 V or less at 40 mA)				4 V or less	
Leakage current	100 μA or less at 24 VDC				0.8 mA or less	
Indicator light	Operating range ····· Red LED illuminates. Proper operating range ····· Green LED illuminates.					
Standard	CE marking, RoHS					

Oilproof Flexible Heavy-duty Lead Wire Specifications

Auto switch model		D-M9NW(V)	D-M9PW(V)	D-M9BW(V)
Sheath	Outside diameter [mm]	2.6		
Insulator	Number of cores	3 cores (Brown/Blue/Black)		2 cores (Brown/Blue)
	Outside diameter [mm]	0.88		
Conductor	Effective area [mm²]	0.15		
	Strand diameter [mm]	0.05		
Minimum bending radius [mm] (Reference values)		17		

* Refer to the **Web Catalogue** for solid state auto switch common specifications.
* Refer to the **Web Catalogue** for lead wire lengths.

Weight

[g]

Auto switch model		D-M9NW(V)	D-M9PW(V)	D-M9BW(V)
Lead wire length	0.5 m (—)	8		7
	1 m (**M**)	14		13
	3 m (**L**)	41		38
	5 m (**Z**)	68		63

Dimensions

[mm]

D-M9□W

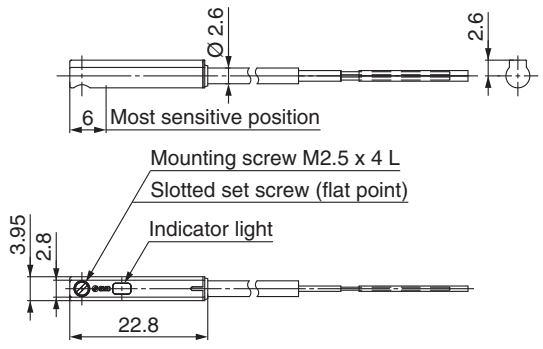

D-M9□WV

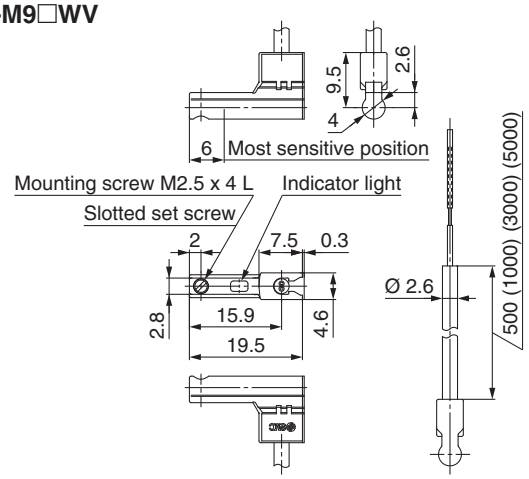

SMC

Guide Rod Type LEYG Series

Step Motor (Servo/24 VDC) Servo Motor (24 VDC)

p. 121

Motor top mounting type

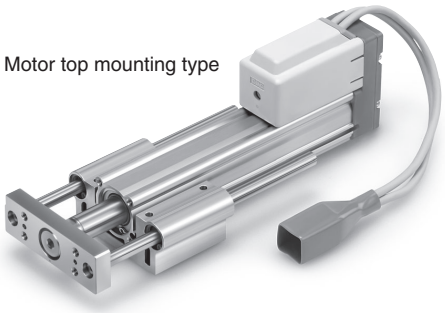

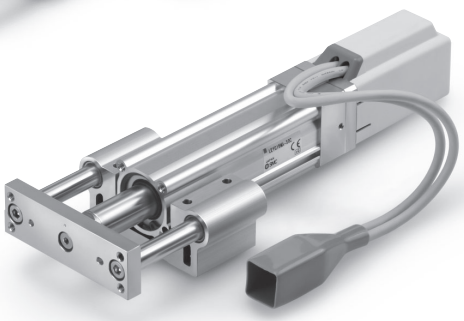

In-line motor type

AC Servo Motor

p. 135

Motor top mounting type

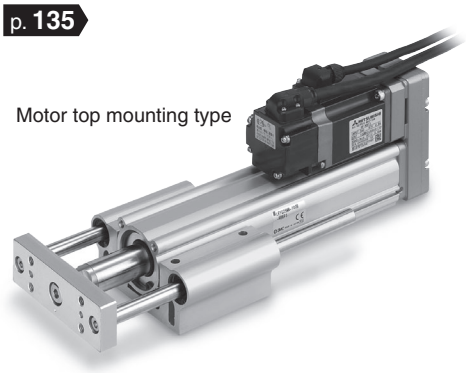

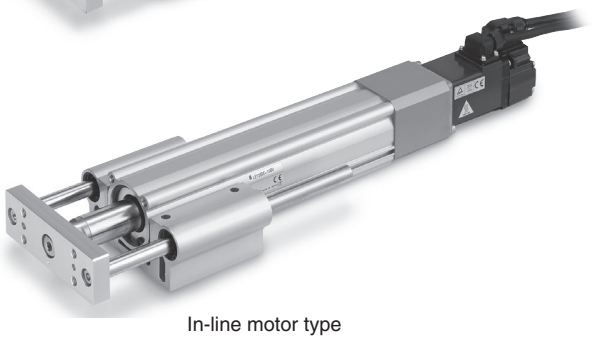

In-line motor type

Step Motor/Servo Motor Controller/Driver p. 190

AC Servo Motor Driver p. 246

Model Selection

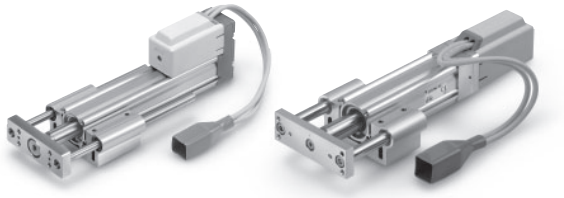

LEYG Series ▶ p. 121

Moment Load Graph

Selection conditions

		Vertical	Horizontal	
Mounting position		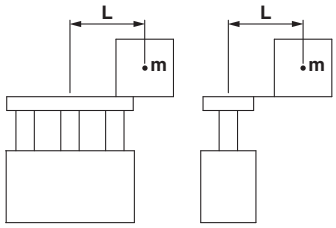	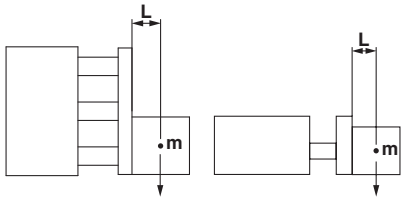	
Max. speed [mm/s]		"Speed–Work Load Graph"	200 or less	Over 200
Bearing	Sliding bearing	Graphs ①, ②	Graphs ⑤, ⑥*1	—
	Ball bushing bearing	Graphs ③, ④	Graphs ⑦, ⑧	Graphs ⑨, ⑩

*1 For the sliding bearing type, the speed is restricted with a horizontal/moment load.

Vertical Mounting, Sliding Bearing

① **70 mm stroke or less**

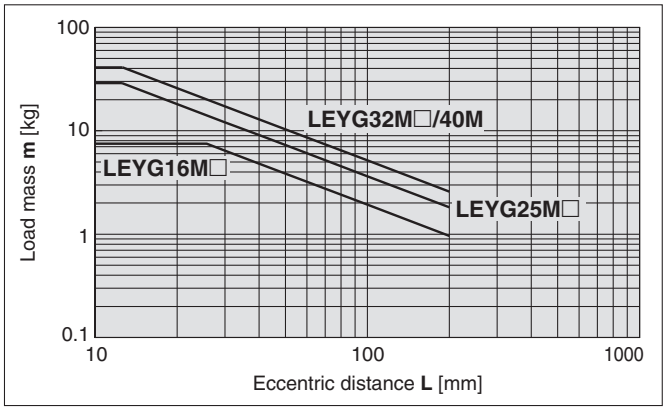

② **Over 75 mm stroke**

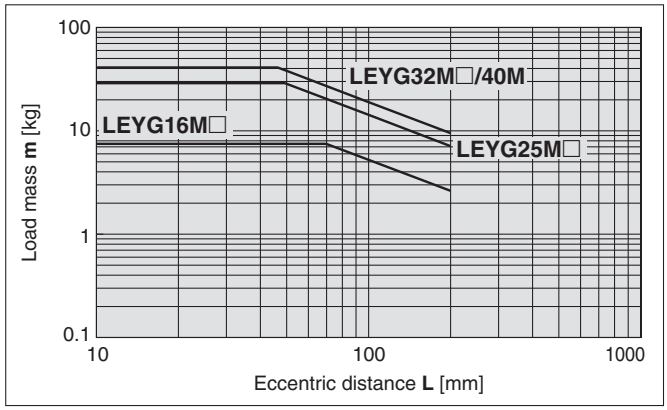

∗ The limit of vertical load mass varies depending on "lead" and "speed." Check "Speed–Work Load Graph" on pages 107 to 109.

Vertical Mounting, Ball Bushing Bearing

③ **35 mm stroke or less**

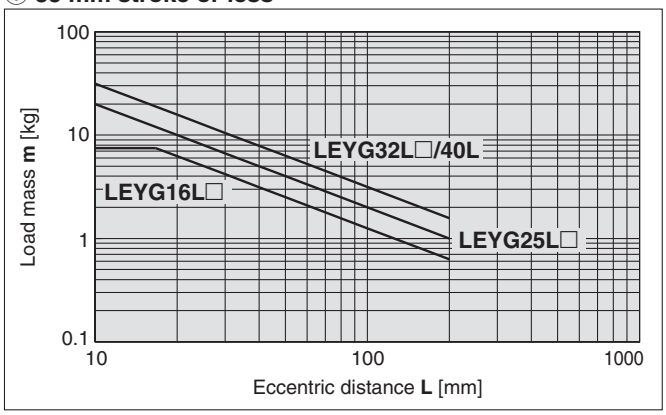

④ **Over 40 mm stroke**

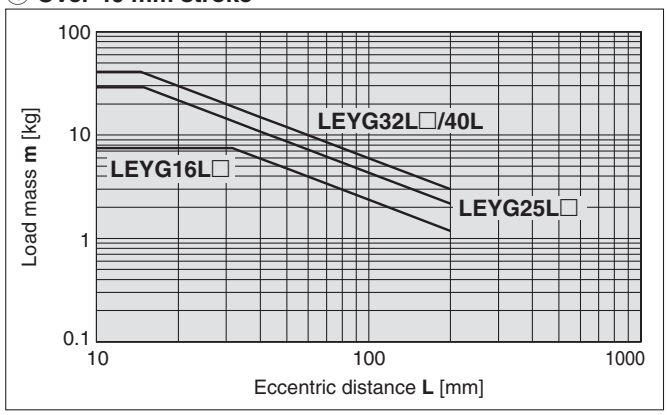

∗ The limit of vertical load mass varies depending on "lead" and "speed." Check "Speed–Work Load Graph" on pages 107 to 109.

Moment Load Graph

Horizontal Mounting, Sliding Bearing

⑤ **L = 50 mm**

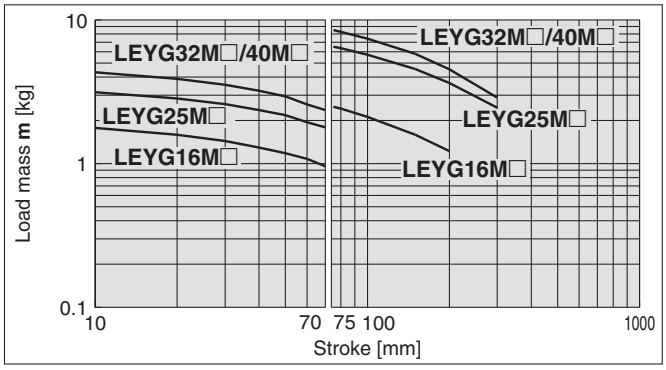

⑥ **L = 100 mm**

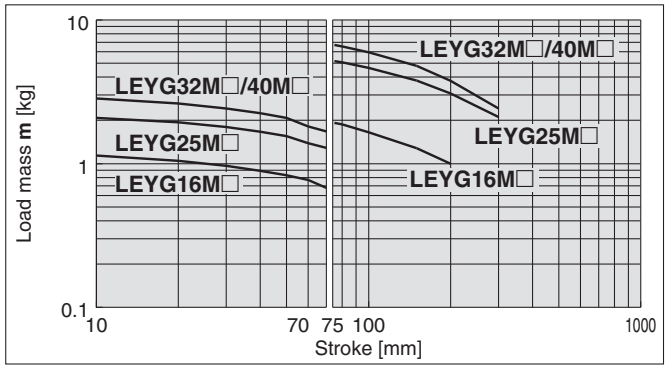

∗ Set the speed to less than or equal to the values shown below.

Motor type	LEYG□M□A	LEYG□M□B	LEYG□M□C
Step motor (Servo/24 VDC)	200 mm/s	125 mm/s	75 mm/s
Servo motor (24 VDC)	200 mm/s	200 mm/s	125 mm/s

∗ For the specifications below, operate the system at the "load mass" shown in the graph x 80 %.
- LEYG25MAA/Servo motor (24 VDC), Lead 12

Horizontal Mounting, Ball Bushing Bearing

⑦ **L = 50 mm Max. speed = 200 mm/s or less**

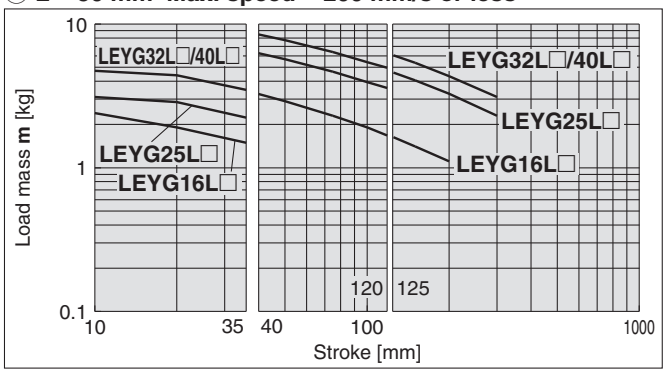

⑧ **L = 100 mm Max. speed = 200 mm/s or less**

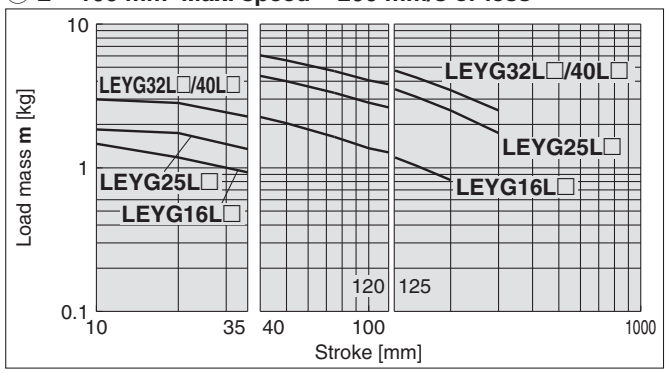

⑨ **L = 50 mm Max. speed = Over 200 mm/s**

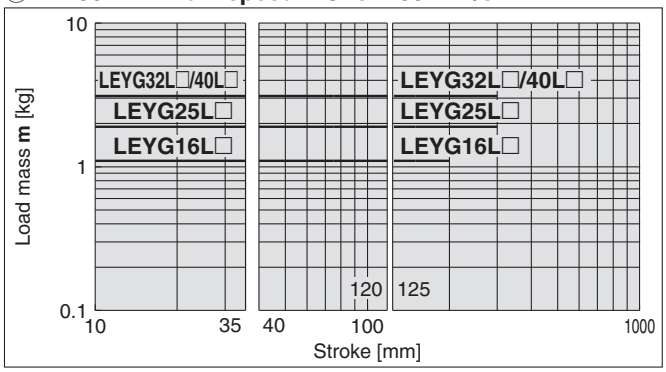

⑩ **L = 100 mm Max. speed = Over 200 mm/s**

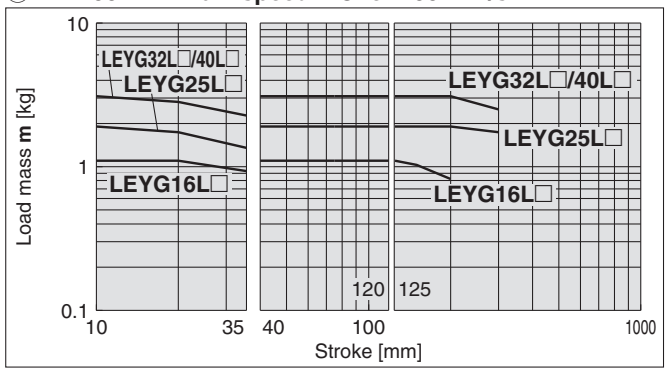

Operating Range when Used as a Stopper

LEYG□M (Sliding bearing)

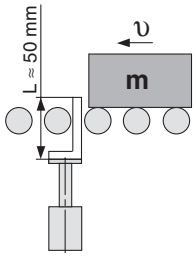

⚠Caution

Handling Precautions

- When used as a stopper, select a model with a stroke of 30 mm or less.
- LEYG□L (ball bushing bearing) cannot be used as a stopper.
- Workpiece collision in series with guide rod cannot be permitted (**Fig. a**).
- The body should not be mounted on the end. It must be mounted on the top or bottom (**Fig. b**).

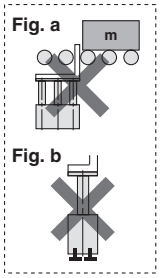

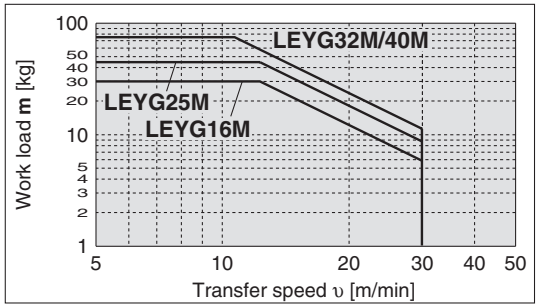

Speed–Work Load Graph (Guide)
For Step Motor (Servo/24 VDC) LECP1, LECPMJ, JXC□1

* These graphs show the work load when the external guide is used together. When using the LEYG alone, refer to pages 105 and 106.

Refer to page 108 for the LECPA, JXC□$^{2}_{3}$ and page 109 for the LECA6.

Horizontal

LEYG16$^{M}_{L}$□

▨ for acceleration/deceleration: 2000 mm/s²

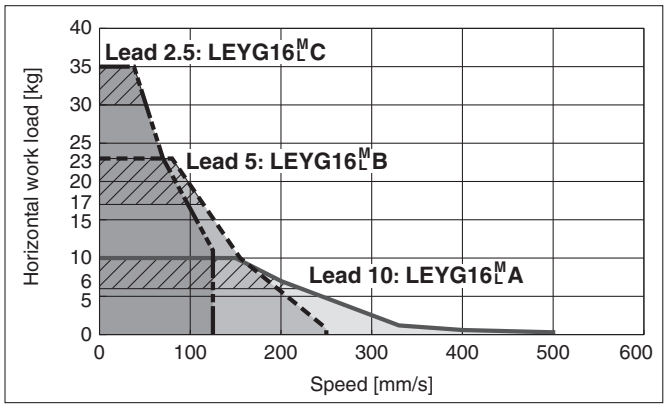

LEYG25$^{M}_{L}$□

▨ for acceleration/deceleration: 2000 mm/s²

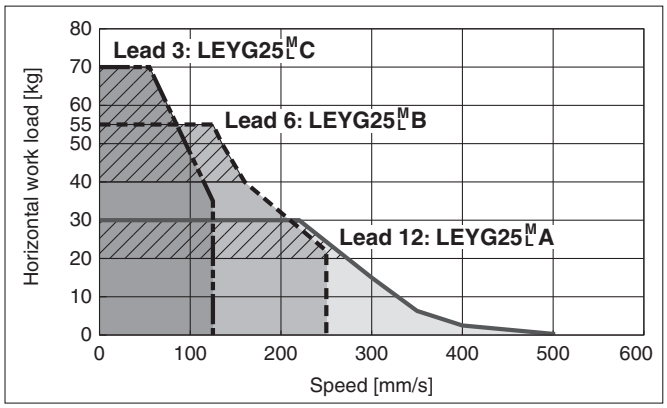

LEYG32$^{M}_{L}$□

▨ for acceleration/deceleration: 2000 mm/s²

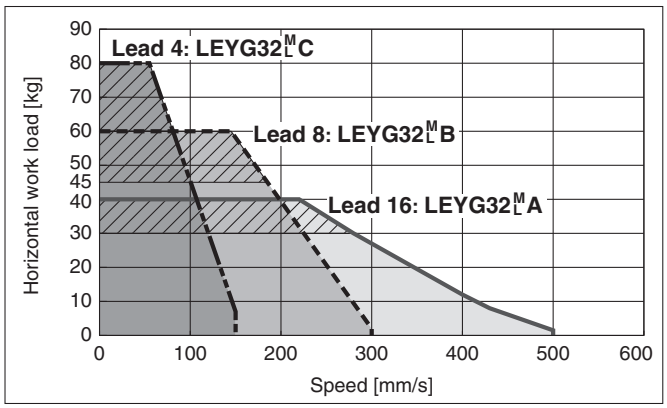

LEYG40$^{M}_{L}$□

▨ for acceleration/deceleration: 2000 mm/s²

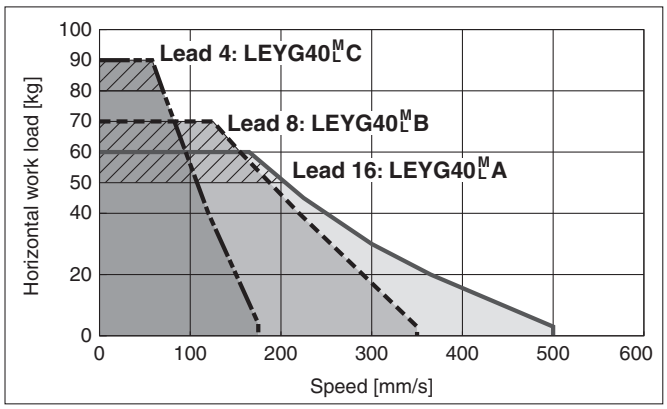

Vertical

LEYG16$^{M}_{L}$□

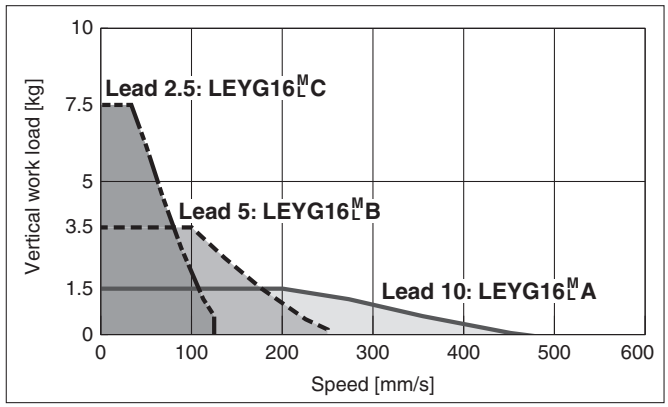

LEYG25$^{M}_{L}$□

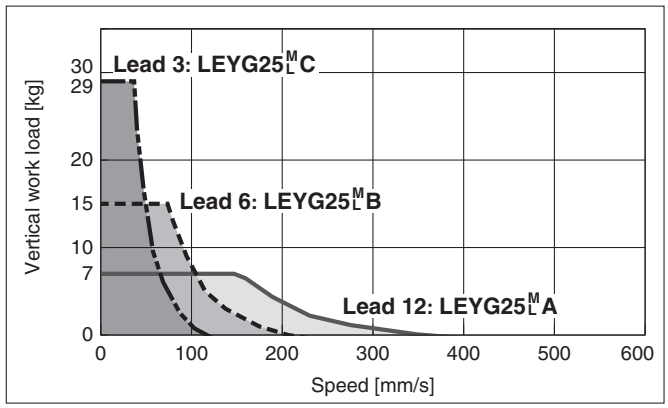

LEYG32$^{M}_{L}$□

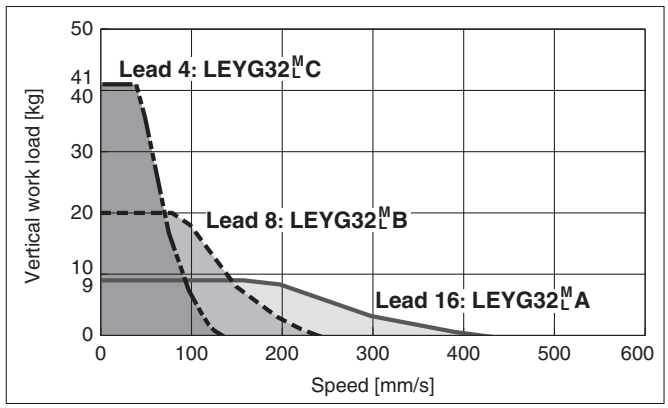

LEYG40$^{M}_{L}$□

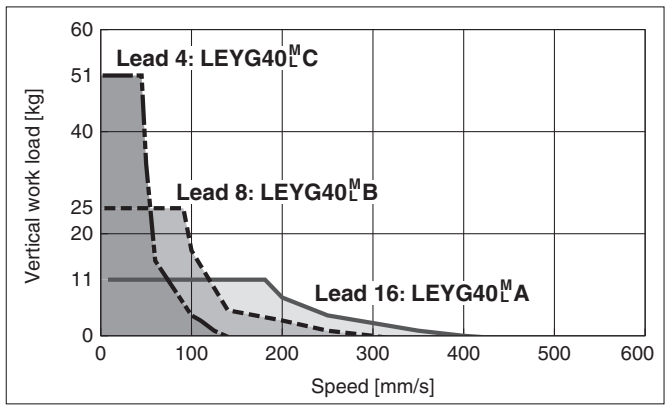

Speed–Work Load Graph (Guide) For Step Motor (Servo/24 VDC) LECPA, JXC□$^{2}_{3}$

* These graphs show the work load when the external guide is used together. When using the LEYG alone, refer to pages 105 and 106.

Refer to page 107 for the LECP6, JXC□1 and page 109 for the LECA6.

Horizontal

LEYG16$^{M}_{L}$□

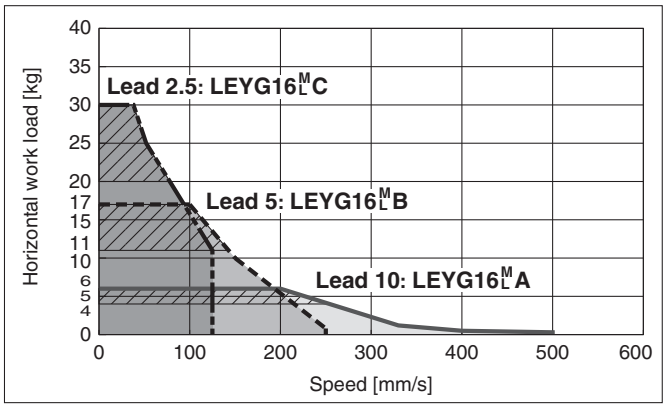

LEYG25$^{M}_{L}$□

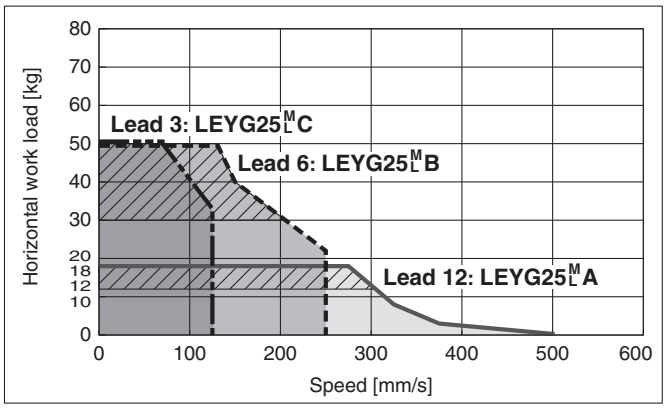

LEYG32$^{M}_{L}$□

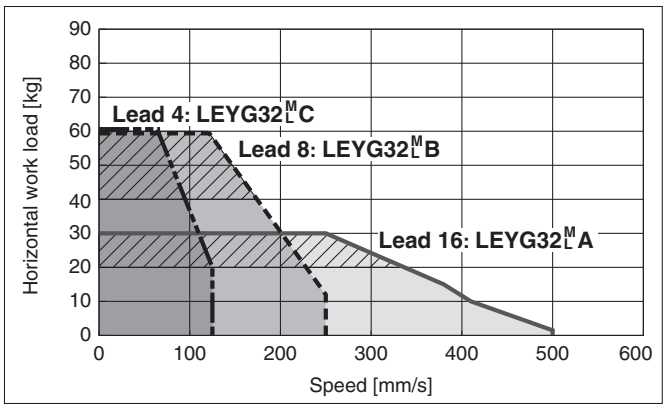

LEYG40$^{M}_{L}$□

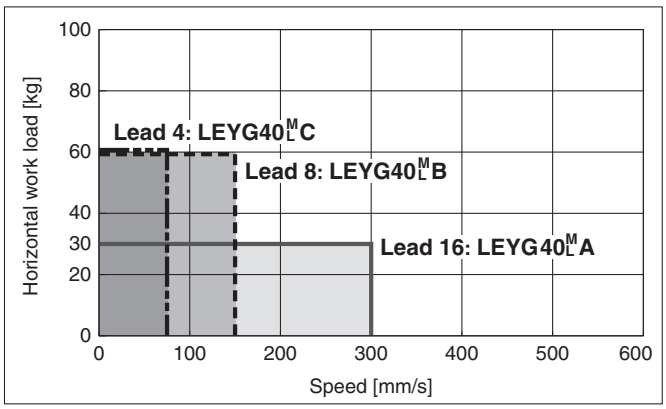

Vertical

LEYG16$^{M}_{L}$□

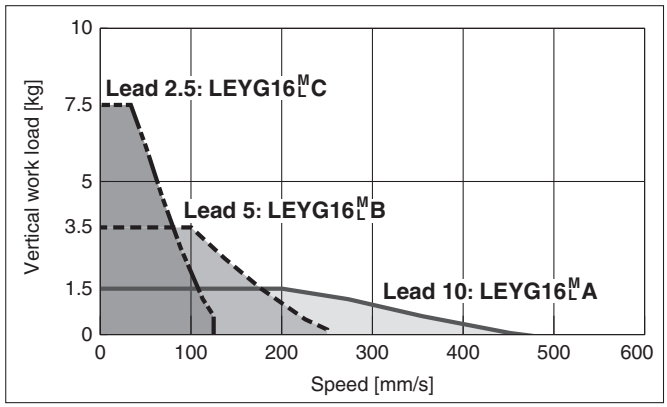

LEYG25$^{M}_{L}$□

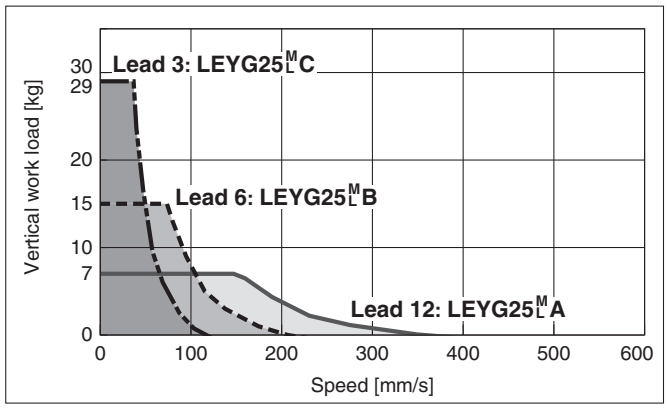

LEYG32$^{M}_{L}$□

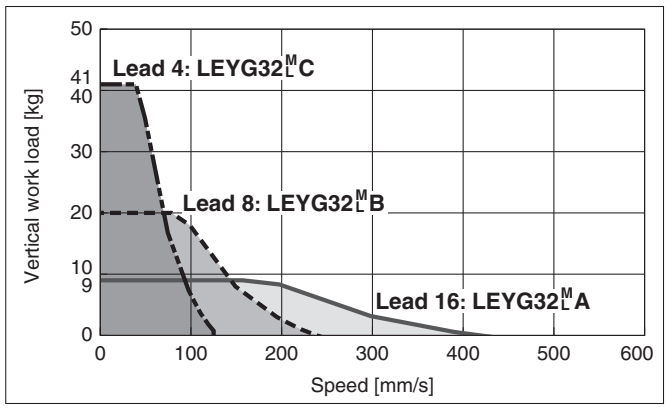

LEYG40$^{M}_{L}$□

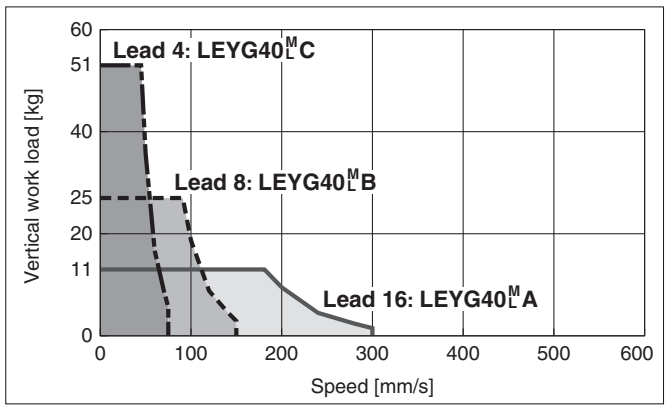

Speed–Work Load Graph (Guide)
For Servo Motor (24 VDC) LECA6

Refer to page 107 for the LECP1, JXC□1 and page 108 for the LECPA, JXC□$^{2}_{3}$.

Horizontal

LEYG16$^{M}_{L}$□A

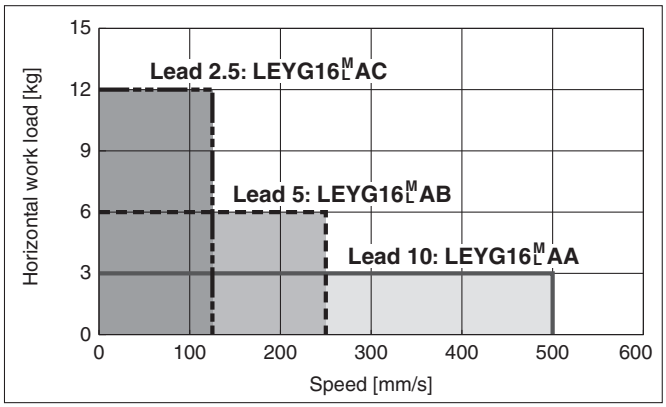

LEYG25$^{M}_{L}$□A

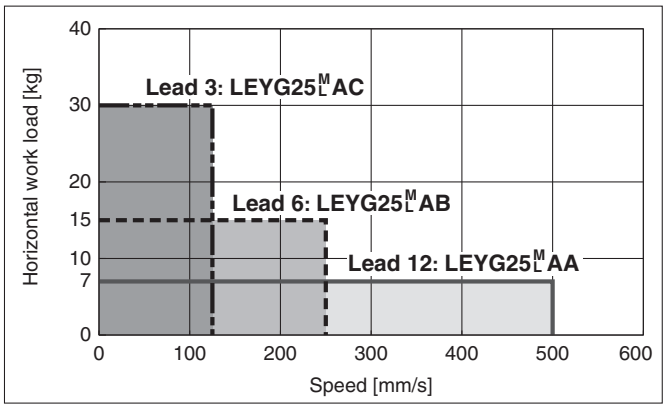

Vertical

LEYG16$^{M}_{L}$□A

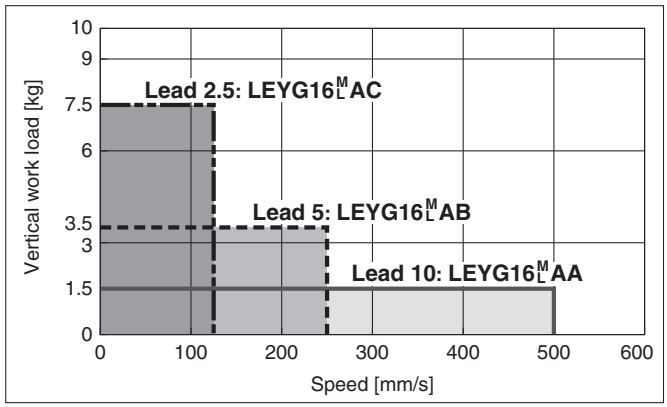

LEYG25$^{M}_{L}$□A

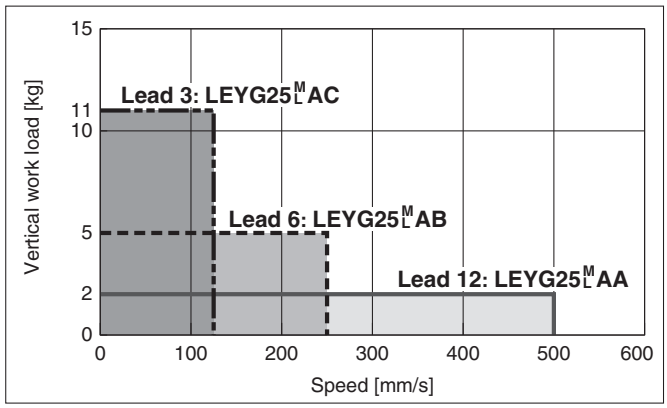

Force Conversion Graph (Guide)

Step Motor (Servo/24 VDC)

LEYG16$^{M}_{L}$□

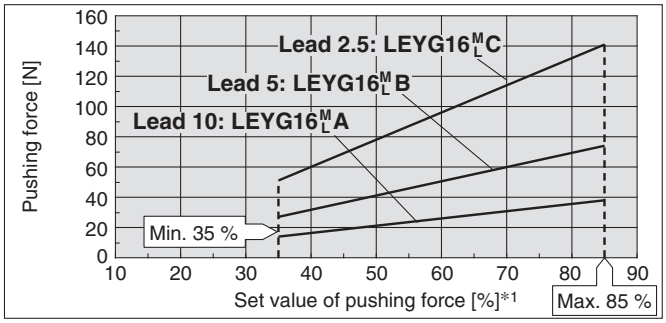

Ambient temperature	Set value of pushing force [%]	Duty ratio [%]	Continuous pushing time [minute]
25 °C or less	85 or less	100	—
40 °C	40 or less	100	—
	50	70	12
	70	20	1.3
	85	15	0.8

LEYG25$^{M}_{L}$□

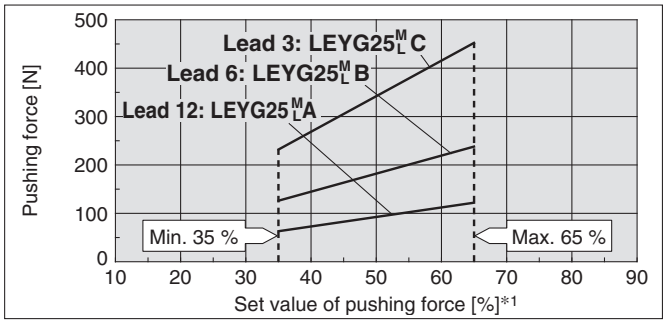

Ambient temperature	Set value of pushing force [%]	Duty ratio [%]	Continuous pushing time [minute]
40 °C or less	65 or less	100	—

LEYG32$^{M}_{L}$□

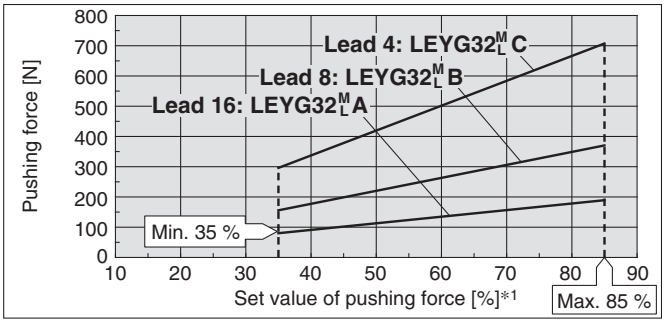

Ambient temperature	Set value of pushing force [%]	Duty ratio [%]	Continuous pushing time [minute]
25 °C or less	85 or less	100	—
40 °C	65 or less	100	—
	85	50	15

LEYG40$^{M}_{L}$□

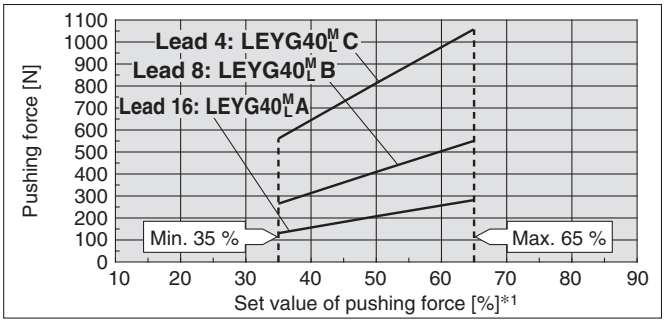

Ambient temperature	Set value of pushing force [%]	Duty ratio [%]	Continuous pushing time [minute]
40 °C or less	65 or less	100	—

*1 Set values for the controller

Servo Motor (24 VDC)

LEYG16$^{M}_{L}$A□

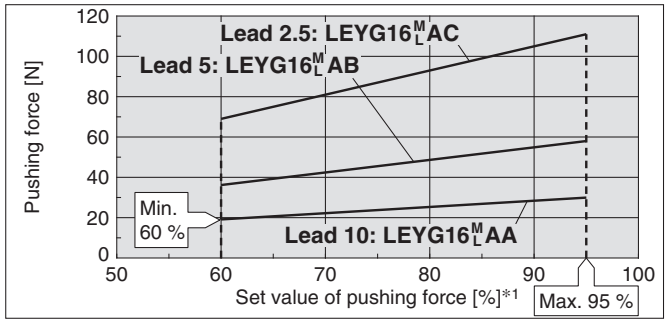

Ambient temperature	Set value of pushing force [%]	Duty ratio [%]	Continuous pushing time [minute]
40 °C or less	95 or less	100	—

LEYG25$^{M}_{L}$A□

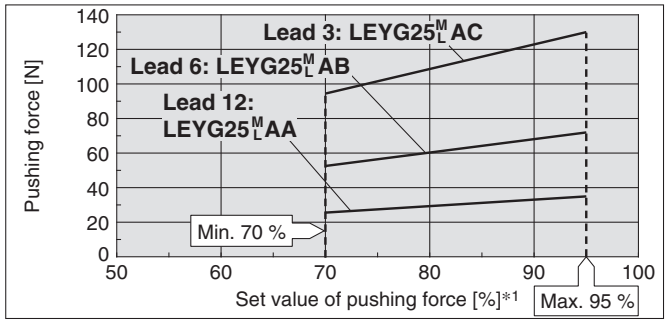

Ambient temperature	Set value of pushing force [%]	Duty ratio [%]	Continuous pushing time [minute]
40 °C or less	95 or less	100	—

<Limit Values for Pushing Force and Trigger Level in Relation to Pushing Speed>
Without Load

Model	Lead	Pushing speed [mm/s]	Pushing force (Setting input value)
LEYG16$^{M}_{L}$	A/B/C	21 to 50	60 to 85 %
LEYG25$^{M}_{L}$	A/B/C	21 to 35	50 to 65 %
LEYG32$^{M}_{L}$	A	24 to 30	60 to 85 %
	B/C	21 to 30	
LEYG40$^{M}_{L}$	A	24 to 30	50 to 65 %
	B/C	21 to 30	

Model	Lead	Pushing speed [mm/s]	Pushing force (Setting input value)
LEYG16$^{M}_{L}$□A	A/B/C	21 to 50	80 to 95 %
LEYG25$^{M}_{L}$□A	A/B/C	21 to 35	80 to 95 %

There is a limit to the pushing force in relation to the pushing speed. If the product is operated outside of the range (low pushing force), the completion signal [INP] may be output before the pushing operation has been completed (during the moving operation).
If operating with the pushing speed below the min. speed, please check for operating problems before using the product.

<Set Values for Vertical Upward Transfer Pushing Operations>

For vertical loads (upward), set the pushing force to the max. value shown below and operate at the work load or less.

Model	LEYG16$^{M}_{L}$□			LEYG25$^{M}_{L}$□			LEYG32$^{M}_{L}$□			LEYG40$^{M}_{L}$□			LEYG16$^{M}_{L}$□A			LEYG25$^{M}_{L}$□A		
Lead	A	B	C	A	B	C	A	B	C	A	B	C	A	B	C	A	B	C
Work load [kg]	0.5	1	2.5	1.5	4	9	2.5	7	16	5	12	26	0.5	1	2.5	0.5	1.5	4
Pushing force	85 %			65 %			85 %			65 %			95 %			95 %		

Model Selection

LEYG Series ▶ p. 135 LECY□ Series ▶ p. 143

Moment Load Graph

Selection conditions

		Vertical	Horizontal	
Mounting position		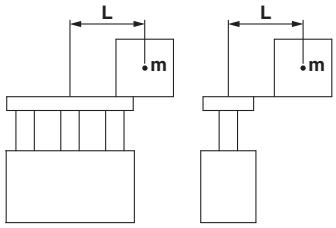	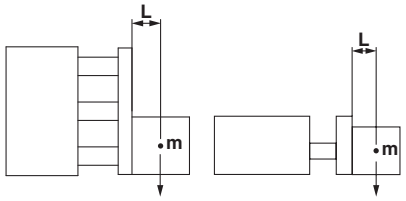	
Max. speed [mm/s]		"Speed–Vertical Work Load Graph"	200 or less	Over 200
Bearing	Sliding bearing	Graphs ①, ②	Graphs ⑤, ⑥*1	Graphs ⑦, ⑧
	Ball bushing bearing	Graphs ③, ④	Graphs ⑨, ⑩	Graphs ⑪, ⑫

*1 For the sliding bearing type, the speed is restricted with a horizontal/moment load.

Vertical Mounting, Sliding Bearing

① 70 mm stroke or less

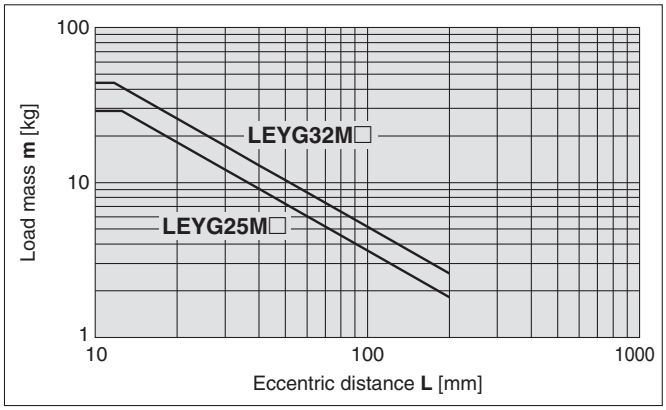

② Over 75 mm stroke

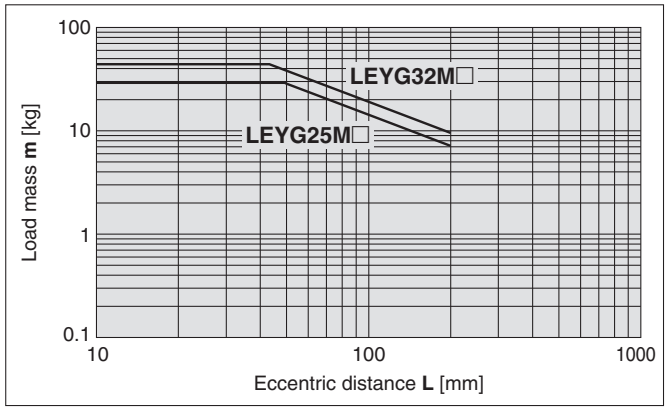

∗ The limit of vertical load mass varies depending on "lead" and "speed."
Check "Speed–Vertical Work Load Graph" on page 113.

Vertical Mounting, Ball Bushing Bearing

③ 35 mm stroke or less

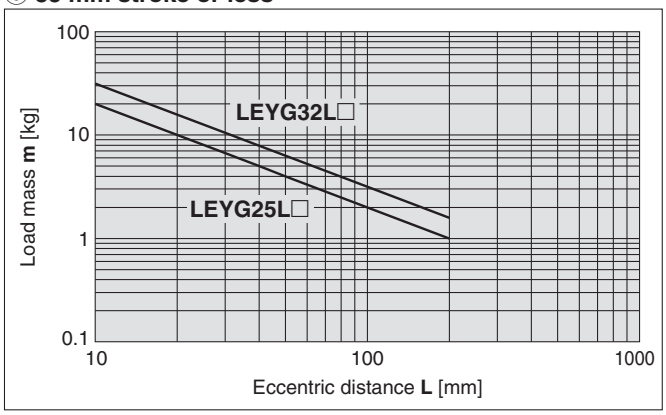

④ Over 40 mm stroke

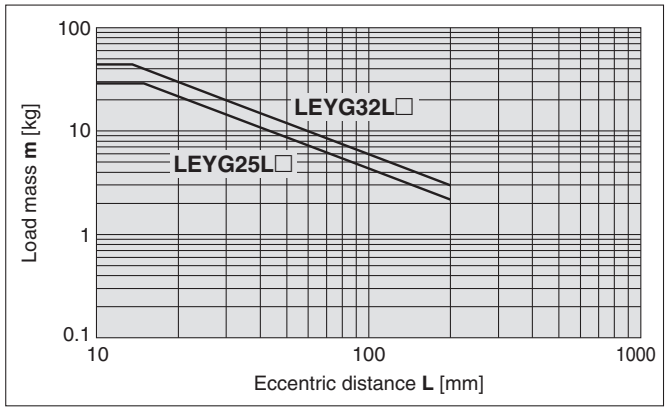

∗ The limit of vertical load mass varies depending on "lead" and "speed."
Check "Speed–Vertical Work Load Graph" on page 113.

Moment Load Graph

Horizontal Mounting, Sliding Bearing

⑤ **L = 50 mm Max. speed = 200 mm/s or less**

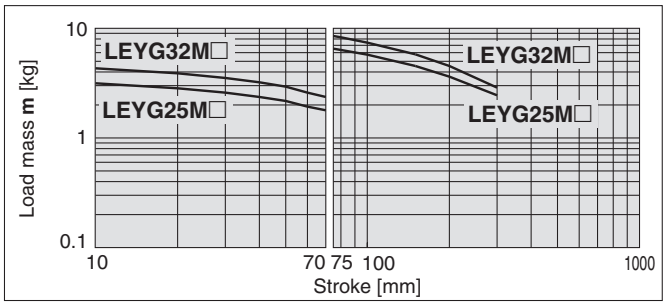

⑥ **L = 100 mm Max. speed = 200 mm/s or less**

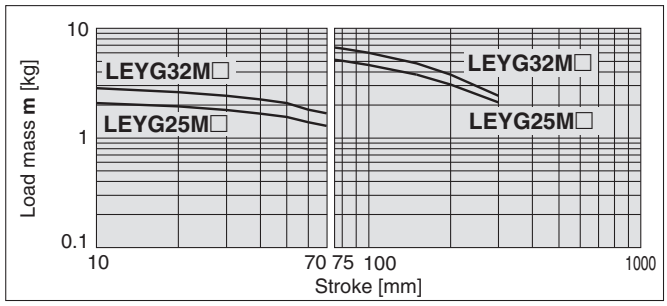

⑦ **L = 50 mm Max. speed = Over 200 mm/s**

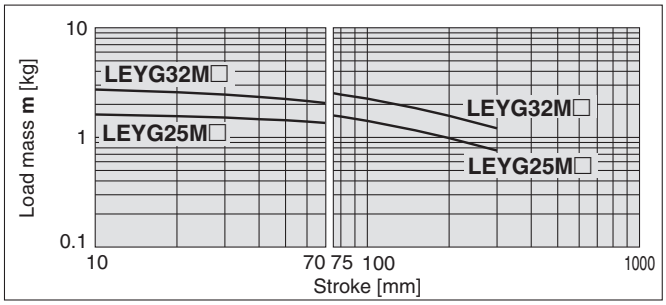

⑧ **L = 100 mm Max. speed = Over 200 mm/s**

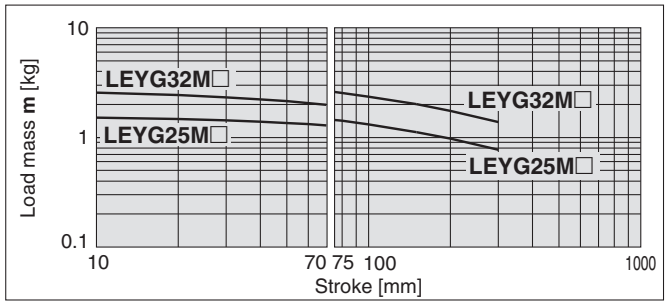

Horizontal Mounting, Ball Bushing Bearing

⑨ **L = 50 mm Max. speed = 200 mm/s or less**

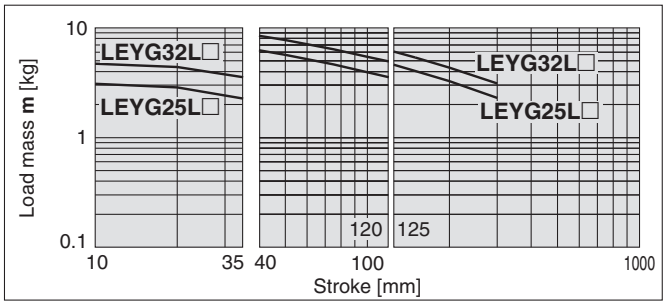

⑩ **L = 100 mm Max. speed = 200 mm/s or less**

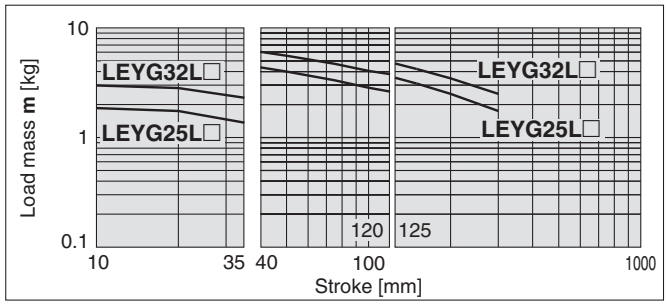

⑪ **L = 50 mm Max. speed = Over 200 mm/s**

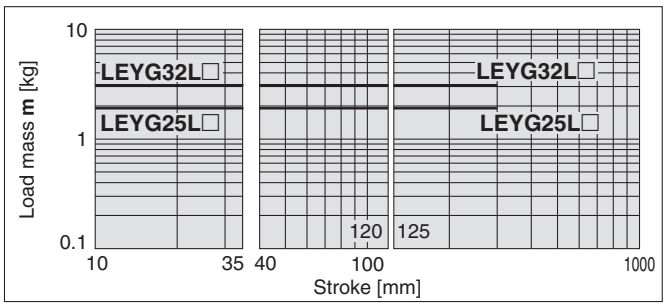

⑫ **L = 100 mm Max. speed = Over 200 mm/s**

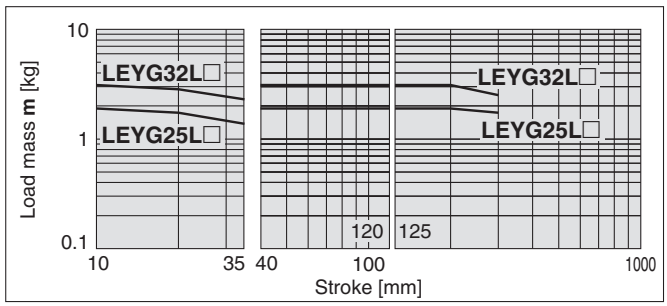

Operating Range when Used as a Stopper

LEYG□M (Sliding bearing)

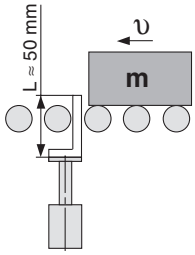

⚠Caution

Handling Precautions

* When used as a stopper, select a model with a stroke of 30 mm or less.
* LEYG□L (ball bushing bearing) cannot be used as a stopper.
* Workpiece collision in series with guide rod cannot be permitted (**Fig. a**).
* The body should not be mounted on the end. It must be mounted on the top or bottom (**Fig. b**).

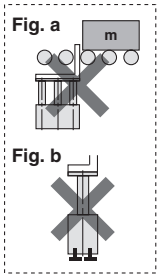

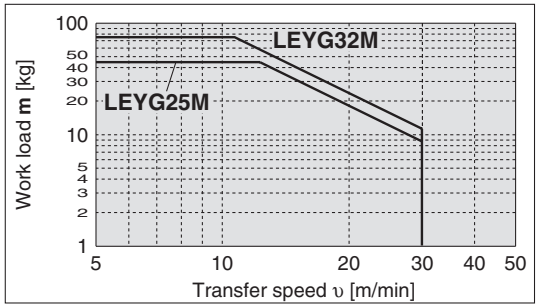

Speed–Vertical Work Load Graph/Required Conditions for "Regeneration Option"

* These graphs show the work load when the external guide is used together. When using the LEYG alone, refer to pages 111 and 112.

LEYG25□S$^{2}_{6}$/T6 (Motor mounting position: Top mounting/In-line)

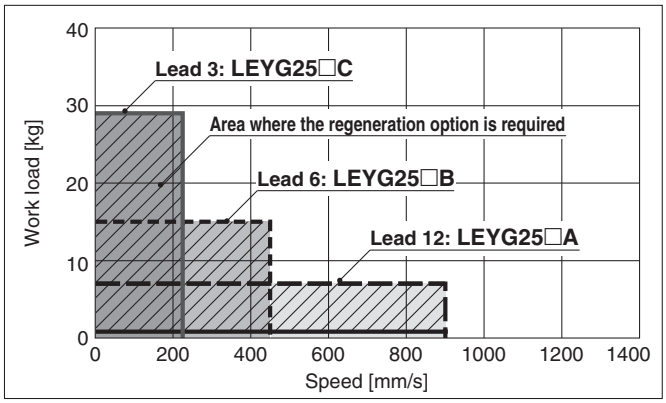

Required conditions for "Regeneration option"

* Regeneration option is required when using product above regeneration line in graph. (Order separately.)

"Regeneration Option" Models

Size	Model
LEYG25□	LEC-MR-RB-032
LEYG32□	LEC-MR-RB-032

LEYG32S$^{3}_{7}$/T7 (Motor mounting position: Top mounting)

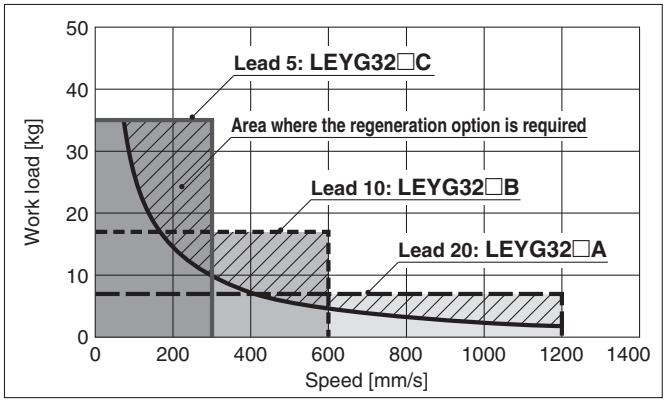

LEYG32DS$^{3}_{7}$/T7 (Motor mounting position: In-line)

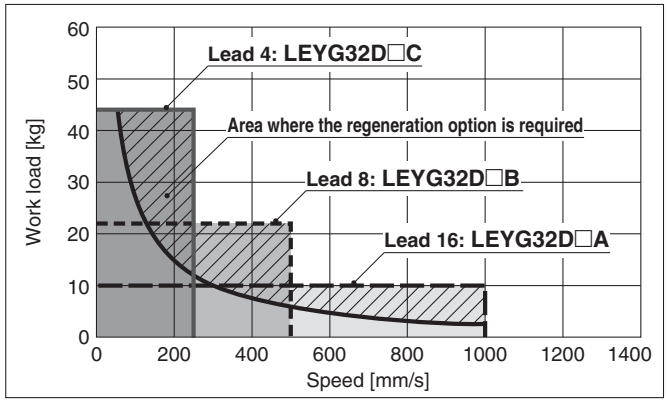

Speed–Horizontal Work Load Graph/Required Conditions for "Regeneration Option"

* These graphs show the work load when the external guide is used together. When using the LEYG alone, refer to pages 111 and 112.

LEYG25□S$^{2}_{6}$/T6 (Motor mounting position: Top mounting/In-line)

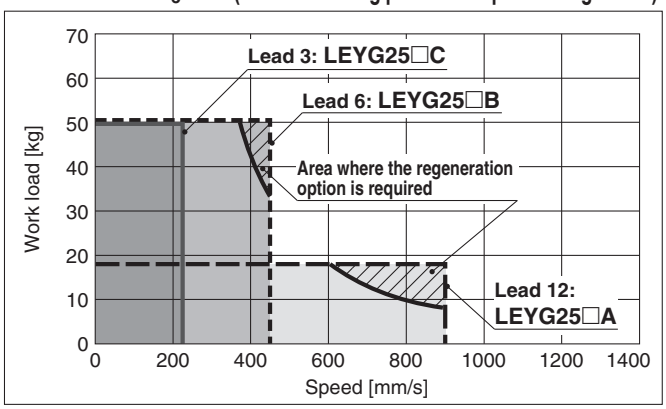

Required conditions for "Regeneration option"

* Regeneration option is required when using product above regeneration line in graph. (Order separately.)

"Regeneration Option" Models

Size	Model
LEYG25□	LEC-MR-RB-032
LEYG32□	LEC-MR-RB-032

LEYG32S$^{3}_{7}$/T7 (Motor mounting position: Top mounting)

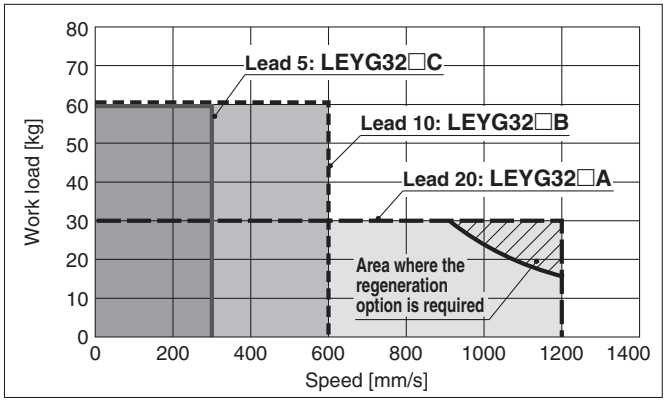

LEYG32DS$^{3}_{7}$/T7 (Motor mounting position: In-line)

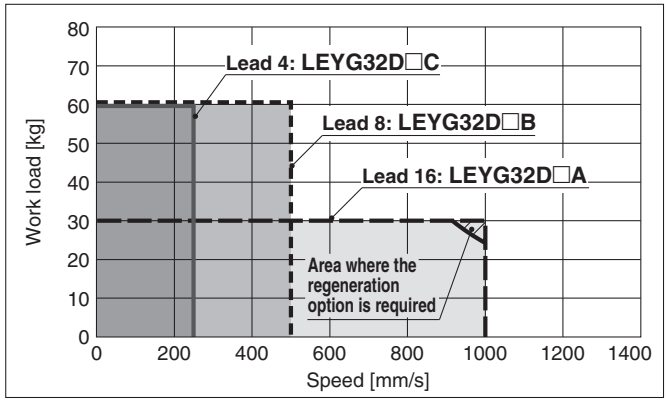

Force Conversion Graph: LECSA, LECSB, LECSC, LECSS

LEYG25□S$^{2}_{6}$ (Motor mounting position: Top mounting/In-line)

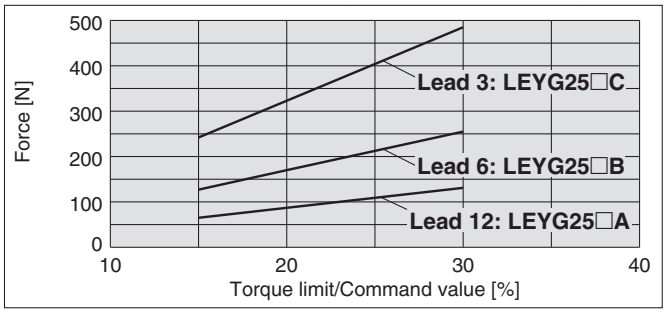

Torque limit/Command value [%]	Duty ratio [%]	Continuous pushing time [minute]
25 or less	100	—
30	60	1.5

LEYG32S$^{3}_{7}$ (Motor mounting position: Top mounting)

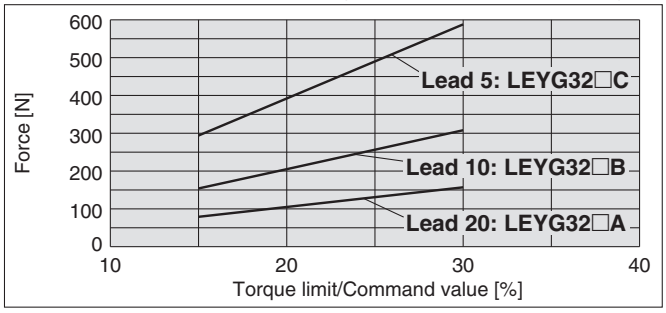

Torque limit/Command value [%]	Duty ratio [%]	Continuous pushing time [minute]
25 or less	100	—
30	60	1.5

LEYG32DS$^{3}_{7}$ (Motor mounting position: In-line)

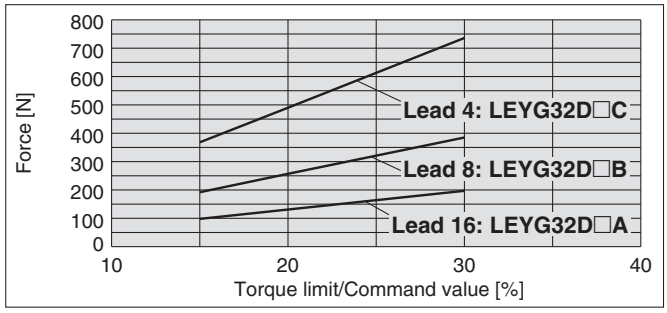

Torque limit/Command value [%]	Duty ratio [%]	Continuous pushing time [minute]
25 or less	100	—
30	60	1.5

Force Conversion Graph: LECSS-T

LEYG25□T6 (Motor mounting position: Top mounting/In-line)

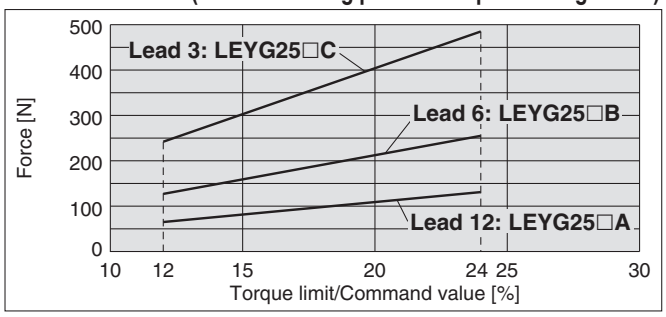

Torque limit/Command value [%]	Duty ratio [%]	Continuous pushing time [minute]
20 or less	100	—
24	60	1.5

LEYG32T7 (Motor mounting position: Top mounting)

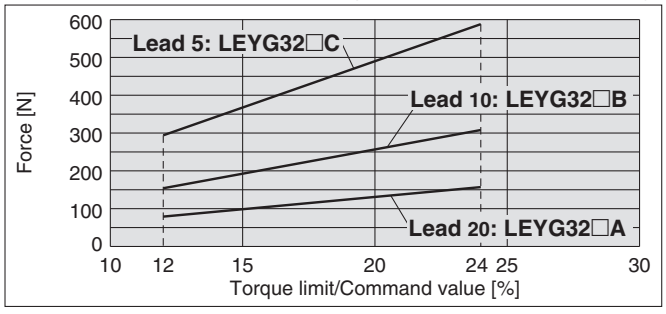

Torque limit/Command value [%]	Duty ratio [%]	Continuous pushing time [minute]
20 or less	100	—
24	60	1.5

LEYG32DT7 (Motor mounting position: In-line)

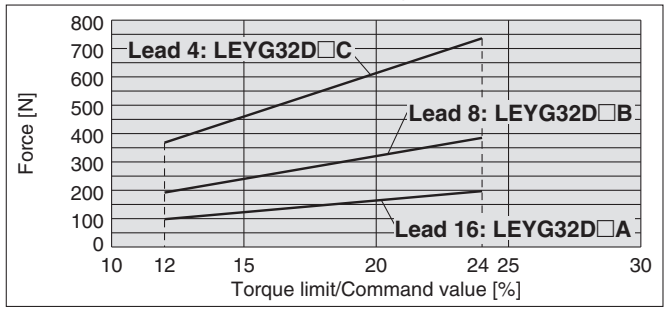

Torque limit/Command value [%]	Duty ratio [%]	Continuous pushing time [minute]
20 or less	100	—
24	60	1.5

Allowable Rotational Torque of Plate

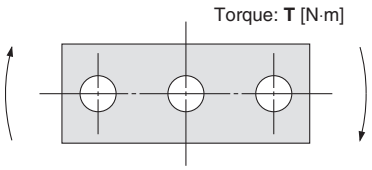

T [N·m]

Model	Stroke [mm]				
	30	50	100	200	300
LEYG16M	0.70	0.57	1.05	0.56	—
LEYG16L	0.82	1.48	0.97	0.57	—
LEYG25M	1.56	1.29	3.50	2.18	1.36
LEYG25L	1.52	3.57	2.47	2.05	1.44
LEYG32M	2.55	2.09	5.39	3.26	1.88
LEYG32L	2.80	5.76	4.05	3.23	2.32
LEYG40M	2.55	2.09	5.39	3.26	1.88
LEYG40L	2.80	5.76	4.05	3.23	2.32

Non-rotating Accuracy of Plate

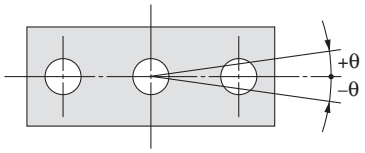

Size	Non-rotating accuracy θ	
	LEYG□M	**LEYG□L**
16	0.06°	0.05°
25		0.04°
32	0.05°	
40		

Plate Displacement: δ

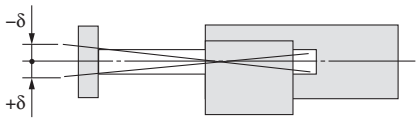

[mm]

Model	Stroke [mm]				
	30	**50**	**100**	**200**	**300**
LEYG16M	±0.20	±0.25	±0.24	±0.27	—
LEYG16L	±0.13	±0.12	±0.17	±0.19	—
LEYG25M	±0.26	±0.31	±0.25	±0.38	±0.36
LEYG25L	±0.13	±0.13	±0.17	±0.20	±0.23
LEYG32M	±0.23	±0.29	±0.23	±0.36	±0.34
LEYG32L	±0.11	±0.11	±0.15	±0.19	±0.22

Model Selection

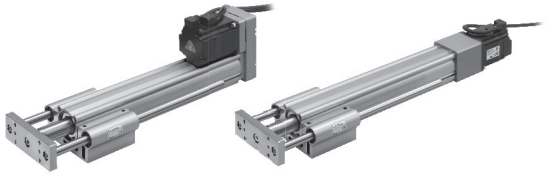

LEYG Series ▶ p. 143 LECS□ Series ▶ p. 135

Moment Load Graph

Selection conditions

		Vertical	Horizontal	
Mounting position		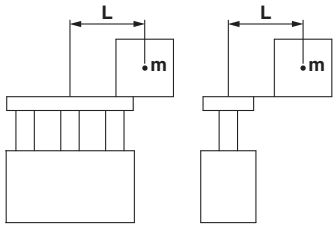	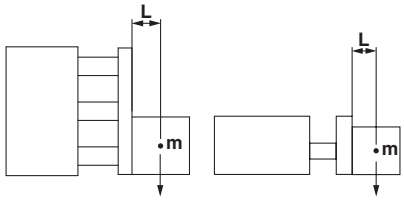	
Max. speed [mm/s]		"Speed–Work Load Graph"	200 or less	Over 200
Bearing	Sliding bearing	Graphs ①, ②	Graphs ⑤, ⑥*1	Graphs ⑦, ⑧
	Ball bushing bearing	Graphs ③, ④	Graphs ⑨, ⑩	Graphs ⑪, ⑫

*1 For the sliding bearing type, the speed is restricted with a horizontal/moment load.

Vertical Mounting, Sliding Bearing

① **70 mm stroke or less**

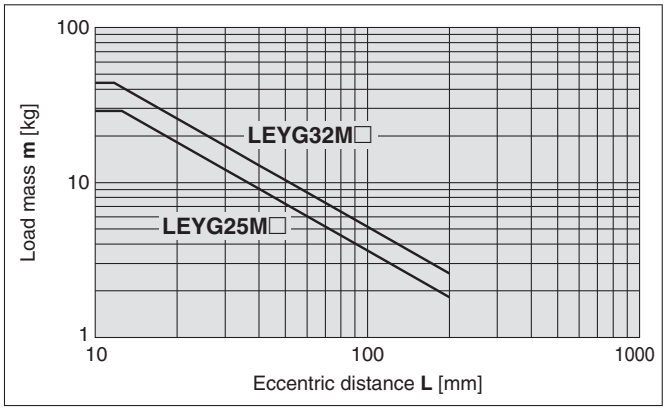

② **Over 75 mm stroke**

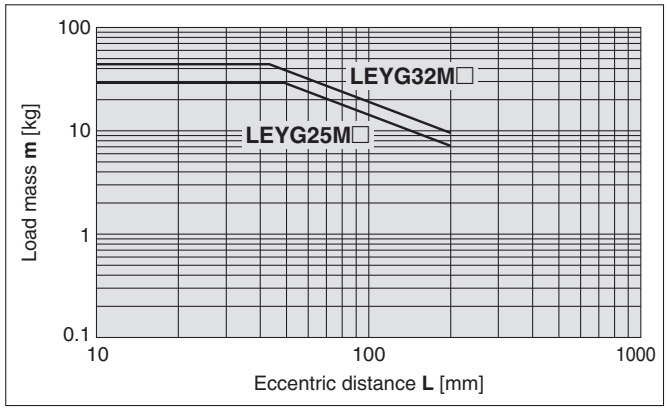

∗ The limit of vertical load mass varies depending on "lead" and "speed."
Check "Speed–Work Load Graph" on page 118.

Vertical Mounting, Ball Bushing Bearing

③ **35 mm stroke or less**

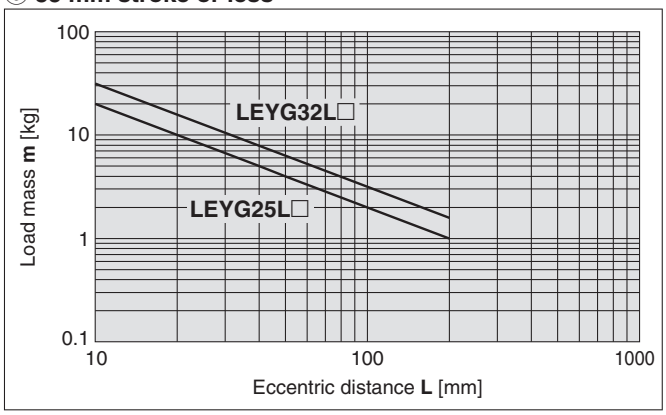

④ **Over 40 mm stroke**

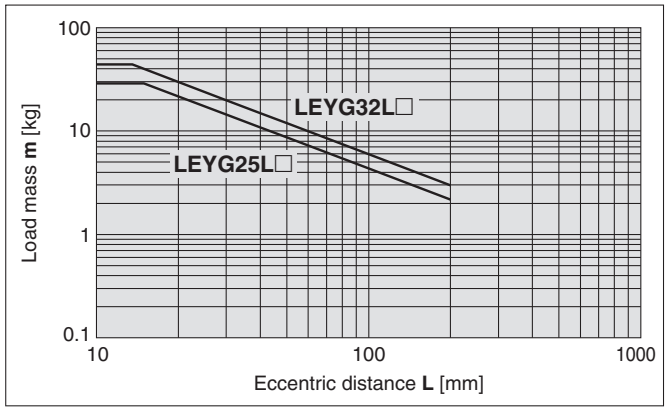

∗ The limit of vertical load mass varies depending on "lead" and "speed."
Check "Speed–Work Load Graph" on page 118.

Moment Load Graph

Horizontal Mounting, Sliding Bearing

⑤ **L = 50 mm Max. speed = 200 mm/s or less**

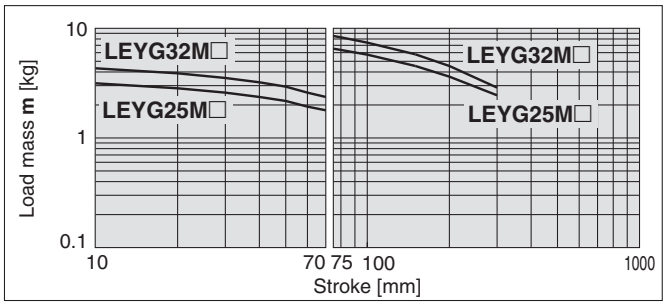

⑥ **L = 100 mm Max. speed = 200 mm/s or less**

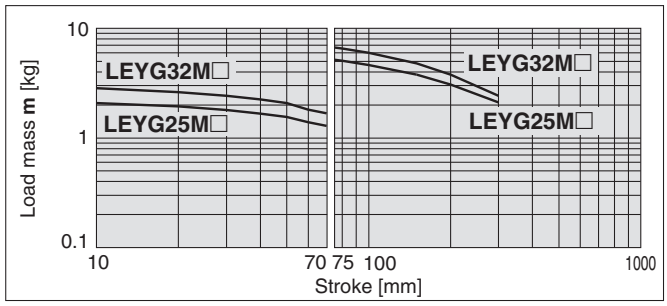

⑦ **L = 50 mm Max. speed = Over 200 mm/s**

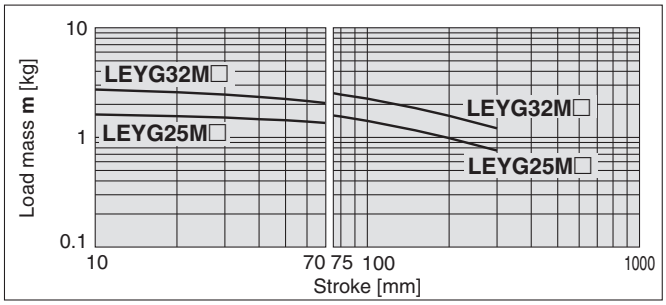

⑧ **L = 100 mm Max. speed = Over 200 mm/s**

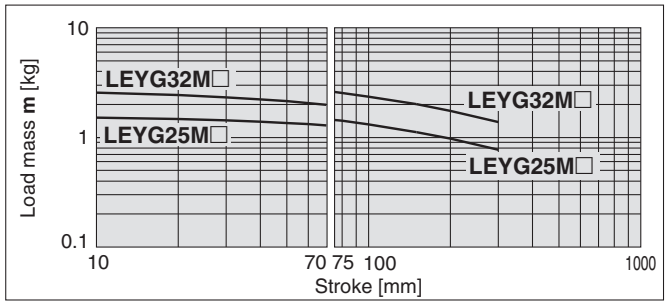

Horizontal Mounting, Ball Bushing Bearing

⑨ **L = 50 mm Max. speed = 200 mm/s or less**

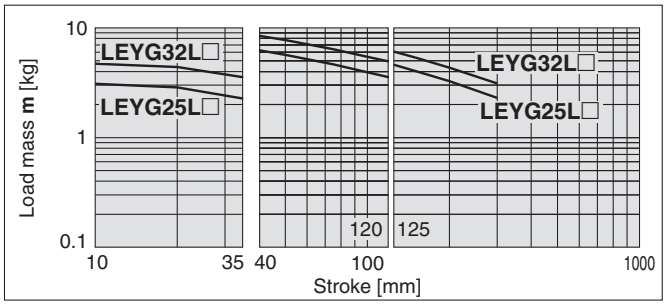

⑩ **L = 100 mm Max. speed = 200 mm/s or less**

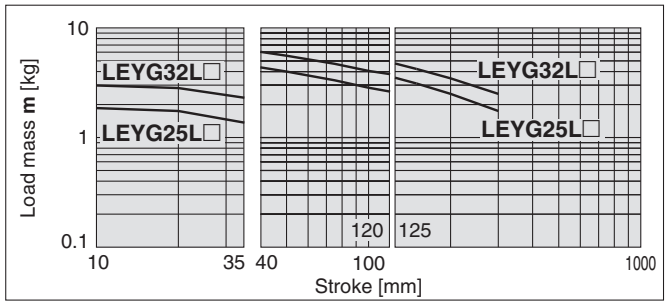

⑪ **L = 50 mm Max. speed = Over 200 mm/s**

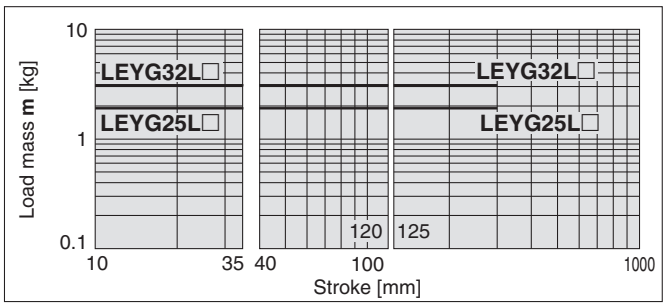

⑫ **L = 100 mm Max. speed = Over 200 mm/s**

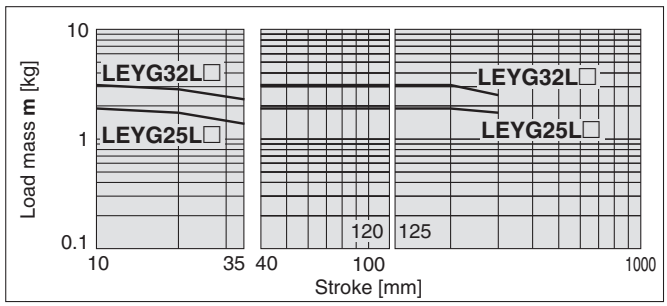

Operating Range when Used as a Stopper

LEYG□M (Sliding bearing)

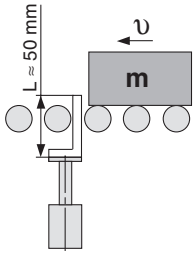

⚠Caution

Handling Precautions

* When used as a stopper, select a model with a stroke of 30 mm or less.
* LEYG□L (ball bushing bearing) cannot be used as a stopper.
* Workpiece collision in series with guide rod cannot be permitted (**Fig. a**).
* The body should not be mounted on the end. It must be mounted on the top or bottom (**Fig. b**).

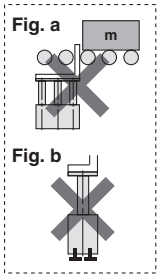

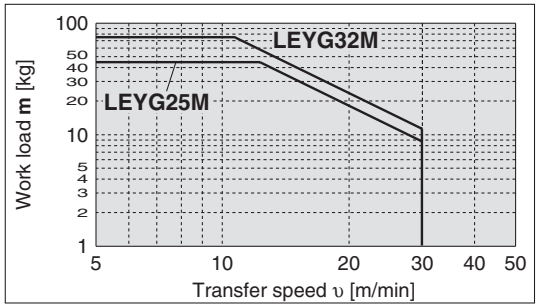

Speed–Work Load Graph/Conditions for "Regenerative Resistor" (Guide)

∗ These graphs show the work load when the external guide is used together. When using the LEYG alone, refer to pages 116 and 117.

LEYG25□V6 (Motor mounting position: Top mounting/In-line)

Vertical

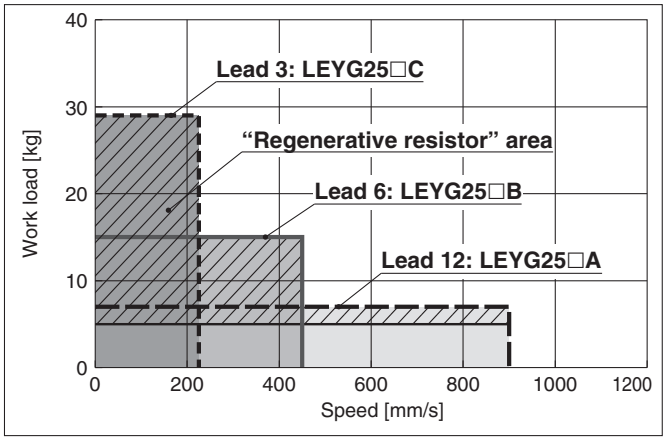

Horizontal

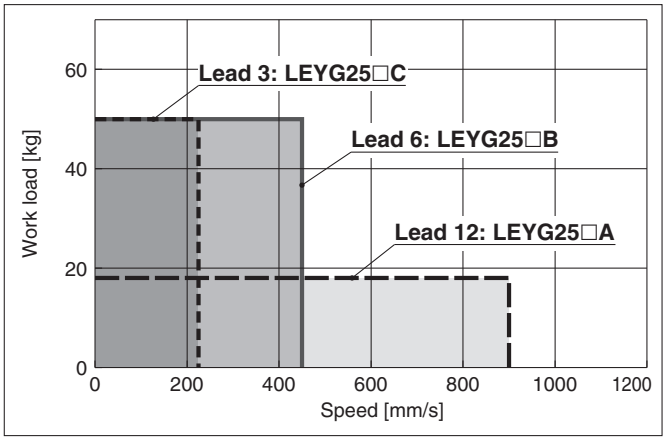

LEYG32V7 (Motor mounting position: Top mounting)

Vertical

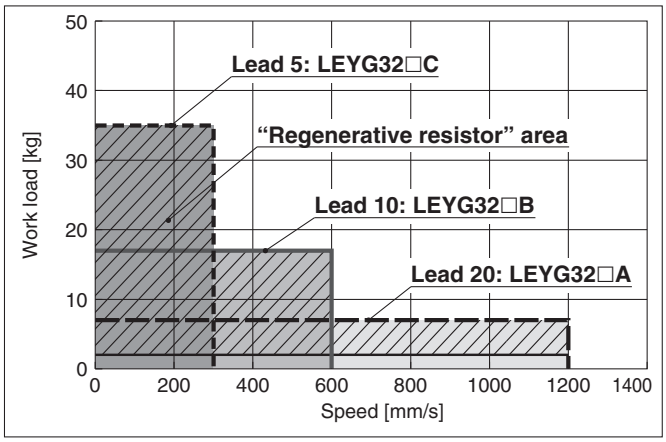

Horizontal

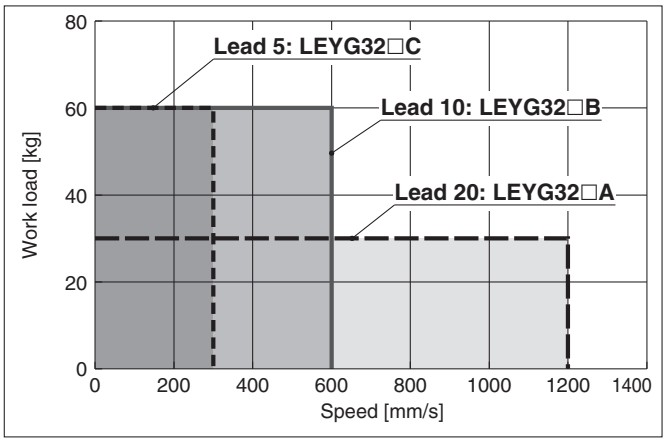

LEYG32DV7 (Motor mounting position: In-line)

Vertical

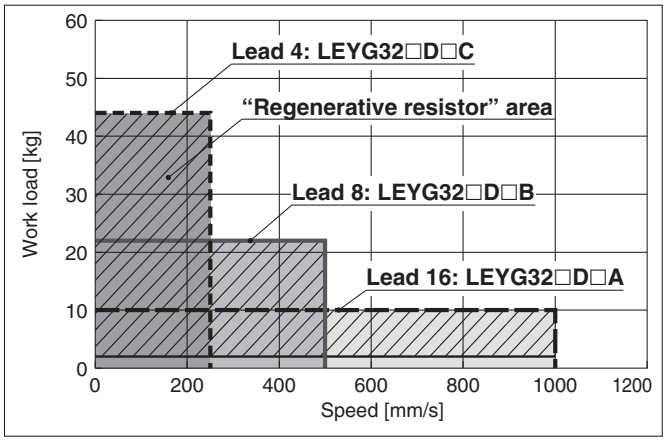

Horizontal

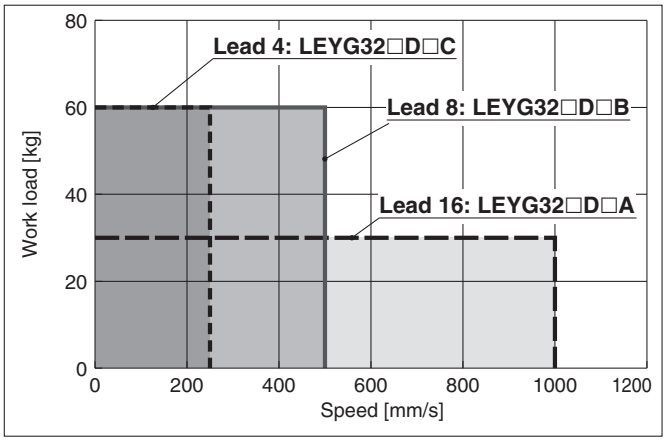

"Regenerative resistor" area

∗ When using the actuator in the "Regenerative resistor" area, download the "AC servo drive capacity selection program/SigmaJunmaSize+" from the SMC website. Then, calculate the necessary regenerative resistor capacity to prepare an appropriate external regenerative resistor.

∗ Regenerative resistor should be provided by the customer.

Applicable Motor/Driver

Model	Applicable model	
	Motor	Servopack (SMC driver)
LEYG25□	SGMJV-01A3A	SGDV-R90A11□ (LECYM2-V5) SGDV-R90A21□ (LECYU2-V5)
LEYG32□	SGMJV-02A3A	SGDV-1R6A11□ (LECYM2-V7) SGDV-1R6A21□ (LECYU2-V7)

Force Conversion Graph

LEYG25□V6 (Motor mounting position: Top mounting/In-line)

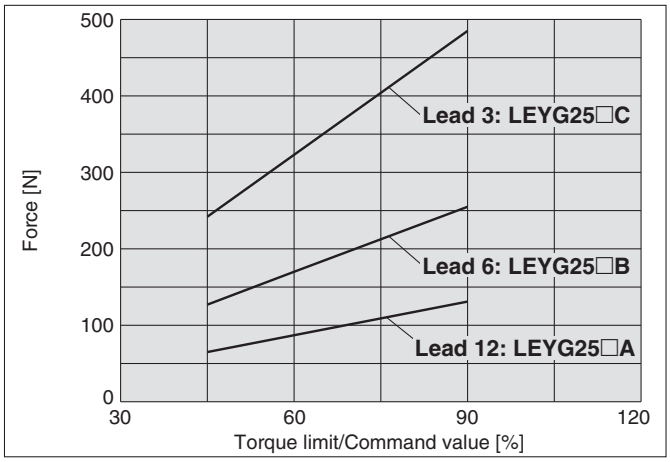

Torque limit/Command value [%]	Duty ratio [%]	Continuous pushing time [minute]
75 or less	100	—
90	60	1.5

LEYG32□V7 (Motor mounting position: Top mounting)

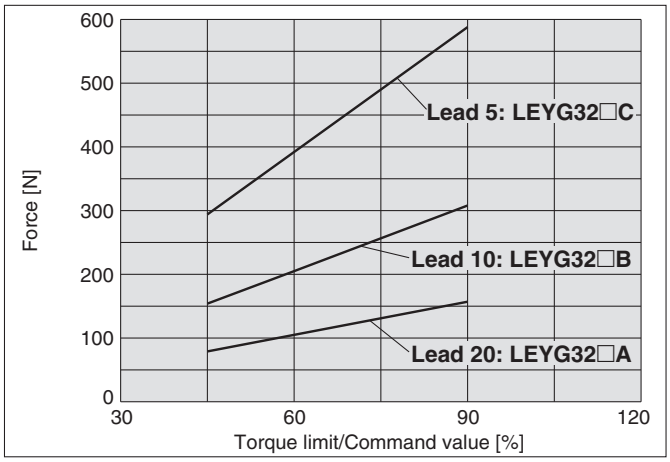

Torque limit/Command value [%]	Duty ratio [%]	Continuous pushing time [minute]
75 or less	100	—
90	60	1.5

LEYG32DV7 (Motor mounting position: In-line)

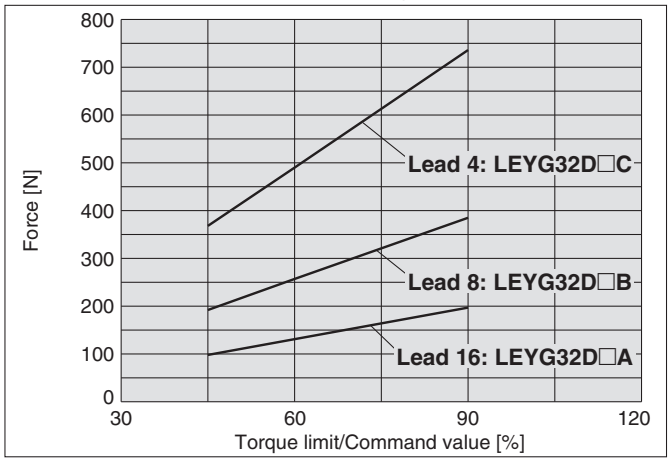

Torque limit/Command value [%]	Duty ratio [%]	Continuous pushing time [minute]
75 or less	100	—
90	60	1.5

Allowable Rotational Torque of Plate: T

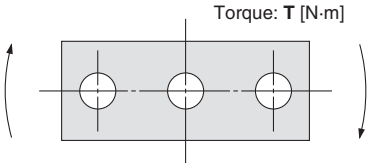

T [N·m]

Model	Stroke [mm]				
	30	50	100	200	300
LEYG25M	1.56	1.29	3.50	2.18	1.36
LEYG25L	1.52	3.57	2.47	2.05	1.44
LEYG32M	2.55	2.09	5.39	3.26	1.88
LEYG32L	2.80	5.76	4.05	3.23	2.32

Non-rotating Accuracy of Plate: θ

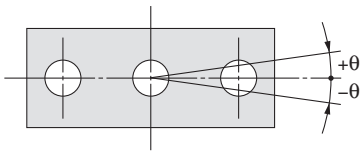

Size	LEYG□M	LEYG□L
25	±0.06°	±0.04°
32	±0.05°	

Plate Displacement: δ

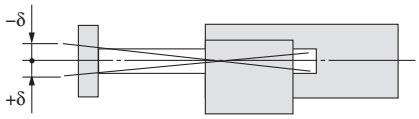

[mm]

Model	Stroke [mm]				
	30	50	100	200	300
LEYG25M	±0.26	±0.31	±0.25	±0.38	±0.36
LEYG25L	±0.13	±0.13	±0.17	±0.20	±0.23
LEYG32M	±0.23	±0.29	±0.23	±0.36	±0.34
LEYG32L	±0.11	±0.11	±0.15	±0.19	±0.22

Step Motor (Servo/24 VDC) Servo Motor (24 VDC)

Electric Actuator/ Guide Rod Type

LEYG Series LEYG16, 25, 32, 40

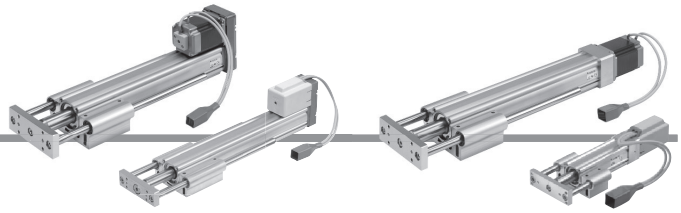

Motor mounting position: Top mounting

Motor mounting position: In-line

How to Order

LEYG 16 M ☐ ☐ B – 50 ☐ ☐ – S1

❶ ❷ ❸ ❹ ❺ ❻ ❼ ❽ ❾

LEC☐ Series **6P** **1** ☐

JXC☐ Series **CD17T**

❿ ⓫ ⓬

For details on controllers, refer to page 122.

❶ Size

16
25
32
40

❷ Bearing type*1

M	Sliding bearing
L	Ball bushing bearing

❸ Motor mounting position

—	Top mounting
D	In-line

❹ Motor type

Symbol	Type	Applicable size			Compatible controller/ driver
		LEYG16	LEYG25	LEYG32/40	
—	Step motor (Servo/24 VDC)	●	●	●	LECP1, LECPA, JXCE1, JXC91, JXCP1, JXCD1, JXCL1
A	Servo motor (24 VDC)	●	●	—	LECA6

❺ Lead [mm]

Symbol	LEYG16	LEYG25	LEYG32/40
A	10	12	16
B	5	6	8
C	2.5	3	4

❻ Stroke*2 *3 [mm]

30	30
to	to
300	300

* For details, refer to the applicable stroke table below.

❼ Motor option*4

—	Without option
C	With motor cover
B	With lock
W	With lock/motor cover

❽ Guide option*5

—	Without option
F	With grease retaining function

❾ Actuator cable type/length*7

Standard cable [m]

—	None
S1	1.5*9
S3	3*9
S5	5*9

Robotic cable [m]

R1	1.5	RA	10*6
R3	3	RB	15*6
R5	5	RC	20*6
R8	8*6		

Applicable Stroke Table*2

●: Standard

Model \ Stroke [mm]	30	50	100	150	200	250	300	Manufacturable stroke range [mm]
LEYG16	●	●	●	●	●	—	—	10 to 200
LEYG25	●	●	●	●	●	●	●	15 to 300
LEYG32/40	●	●	●	●	●	●	●	20 to 300

For auto switches, refer to pages 101 to 103.

Use of auto switches for the guide rod type LEYG series

· Auto switches must be inserted from the front side with the rod (plate) sticking out.
· Auto switches cannot be fixed with the parts hidden behind the guide attachment (the side of the rod that sticks out).
· Please consult with SMC when using auto switches on the side of the rod that sticks out, as it is produced as a special order.

LEC□ Series (For details, refer to page 123.)

6P 1 □
⑩ ⑪ ⑫

⑩ Controller/Driver type*8

—	Without controller/driver	
6N	**LECA6** (Step data input type)	NPN
6P		PNP
1N	**LECP1***9 (Programless type)	NPN
1P		PNP
AN	**LECPA***9 *11 (Pulse input type)	NPN
AP		PNP

⑪ I/O cable length*12, Communication plug

—	Without cable (Without communication plug connector)
1	1.5 m
3	3 m*13
5	5 m*13
S	Straight type communication plug connector
T	T-branch type communication plug connector

⑫ Controller/Driver mounting

—	Screw mounting
D	DIN rail*14

JXC□ Series (For details, refer to page 123.)

⑩ Controller

—	Without controller
C□1□□	With controller

C D 1 7 T

Communication protocol

E	EtherCAT®
9	EtherNet/IP™
P	PROFINET
D	DeviceNet™
L	IO-Link

For single axis

Mounting

7	Screw mounting
8*14	DIN rail

Communication plug connector for DeviceNet™*15

—	Without plug connector
S	Straight type
T	T-branch type

*1 When [M: Sliding bearing] is selected, the maximum speed of lead [A] is 400 mm/s (at no-load, horizontal mounting). The speed is also restricted with a horizontal/moment load. Refer to "Model Selection" on page 105.
*2 Please consult with SMC for non-standard strokes as they are produced as special orders.
*3 There is a limit for mounting the size 32/40 top mounting types and strokes of 50 mm or less. Refer to the dimensions.
*4 When "With lock" or "With lock/motor cover" is selected for the top mounting type, the motor body will stick out from the end of the body for size 16/40 with strokes of 30 mm or less. Check for interference with workpieces before selecting a model.
*5 Only available for size 25, 32, and 40 sliding bearings (Refer to "Construction" on page 128.)
*6 Produced upon receipt of order (Robotic cable only)
*7 The standard cable should only be used on fixed parts. For use on moving parts, select the robotic cable.
*8 For details on controllers/drivers and compatible motors, refer to the compatible controller/driver on the next page.
*9 Only available for the motor type "Step motor"
*10 Not compliant with CE
*11 When pulse signals are open collector, order the current limiting resistor (LEC-PA-R-□) on page 220 separately.
*12 When "Without controller/driver" is selected for controller/driver types, I/O cable cannot be selected. Refer to page 199 (For LECA6), page 213 (For LECP1), or page 220 (For LECPA) if I/O cable is required.
*13 When "Pulse input type" is selected for controller/driver types, pulse input usable only with differential. Only 1.5 m cables usable with open collector
*14 The DIN rail is not included. Order it separately.
*15 Select "—" for anything other than DeviceNet™.

⚠Caution

[CE-compliant products]

① EMC compliance was tested by combining the electric actuator LEY series and the controller LEC/JXC series.
The EMC depends on the configuration of the customer's control panel and the relationship with other electrical equipment and wiring. Therefore, compliance with the EMC directive cannot be certified for SMC components incorporated into the customer's equipment under actual operating conditions. As a result, it is necessary for the customer to verify compliance with the EMC directive for the machinery and equipment as a whole.

② For the servo motor (24 VDC) specification, EMC compliance was tested by installing a noise filter set (LEC-NFA). Refer to page 199 for the noise filter set. Refer to the LECA series Operation Manual for installation.

[UL-compliant products (For the LEC series)]

When compliance with UL is required, the electric actuator and controller/driver should be used with a UL1310 Class 2 power supply.

The actuator and controller/driver are sold as a package.

Confirm that the combination of the controller/driver and actuator is correct.

<Check the following before use.>

① Check the actuator label for the model number. This number should match that of the controller/driver.

② Check that the Parallel I/O configuration matches (NPN or PNP).

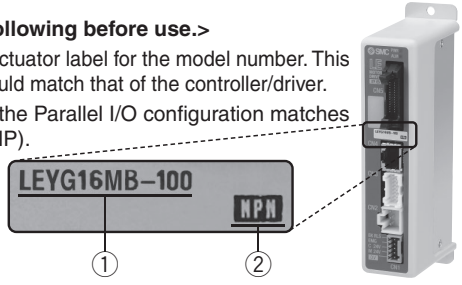

* Refer to the Operation Manual for using the products. Please download it via our website, https://www.smc.eu

Compatible Controller/Driver

LEC□ Series

Type	Step data input type	Programless type	Pulse input type
Series	**LECA6**	**LECP1**	**LECPA**
Features	Value (Step data) input Standard controller	Capable of setting up operation (step data) without using a PC or teaching box	Operation by pulse signals
Compatible motor	Servo motor (24 VDC)	Step motor (Servo/24 VDC)	
Max. number of step data	64 points	14 points	—
Power supply voltage			
Reference page	191	207	214

JXC□ Series

Type	EtherCAT® direct input type	EtherNet/IP™ direct input type	PROFINET direct input type	DeviceNet™ direct input type	IO-Link direct input type
Series	**JXCE1**	**JXC91**	**JXCP1**	**JXCD1**	**JXCL1**
Features	EtherCAT® direct input	EtherNet/IP™ direct input	PROFINET direct input	DeviceNet™ direct input	IO-Link direct input
Compatible motor	Step motor (Servo/24 VDC)				
Max. number of step data	64 points				
Power supply voltage	24 VDC				
Reference page	224				

Specifications

Step Motor (Servo/24 VDC)

Model				LEYG16 M/L			LEYG25 M/L			LEYG32 M/L			LEYG40 M/L		
Actuator specifications	Work load [kg]*1	Horizontal (LECP1, JXC□1)	Acceleration/Deceleration at 3000 [mm/s²]	6	17	30	20	40	60	30	45	60	50	60	80
			Acceleration/Deceleration at 2000 [mm/s²]	10	23	35	30	55	70	40	60	80	60	70	90
		Horizontal (LECPA, JXC□2/3)	Acceleration/Deceleration at 3000 [mm/s²]	4	11	20	12	30	30	20	40	40	30	60	60
			Acceleration/Deceleration at 2000 [mm/s²]	6	17	30	18	50	50	30	60	60	—	—	—
		Vertical	Acceleration/Deceleration at 3000 [mm/s²]	1.5	3.5	7.5	7	15	29	9	20	41	11	25	51
	Pushing force [N]*2 *3 *4			14 to 38	27 to 74	51 to 141	63 to 122	126 to 238	232 to 452	80 to 189	156 to 370	296 to 707	132 to 283	266 to 553	562 to 1058
	Speed [mm/s]*4	LECP1/JXC□1		15 to 500	8 to 250	4 to 125	18 to 500	9 to 250	5 to 125	24 to 500	12 to 300	6 to 150	24 to 500	12 to 350	6 to 175
		LECPA/JXC□2/3									12 to 250	6 to 125	24 to 300	12 to 150	6 to 75
	Max. acceleration/deceleration [mm/s²]			3000											
	Pushing speed [mm/s]*5			50 or less			35 or less			30 or less			30 or less		
	Positioning repeatability [mm]			±0.02											
	Lost motion [mm]*6			0.1 or less											
	Screw lead [mm]			10	5	2.5	12	6	3	16	8	4	16	8	4
	Impact/Vibration resistance [m/s²]*7			50/20											
	Actuation type			Ball screw + Belt (LEYG□□), Ball screw (LEYG□□D)											
	Guide type			Sliding bearing (LEYG□M), Ball bushing bearing (LEYG□L)											
	Operating temp. range [°C]			5 to 40											
	Operating humidity range [%RH]			90 or less (No condensation)											
Electric specifications	Motor size			□28			□42			□56.4			□56.4		
	Motor type			Step motor (Servo/24 VDC)											
	Encoder			Incremental A/B phase (800 pulse/rotation)											
	Rated voltage [V]			24 VDC ±10 %											
	Power consumption [W]*8			23			40			50			50		
	Standby power consumption when operating [W]*9			16			15			48			48		
	Max. instantaneous power consumption [W]*10			43			48			104			106		
Lock unit specifications	Type*11			Non-magnetising lock											
	Holding force [N]			20	39	78	78	157	294	108	216	421	127	265	519
	Power consumption [W]*12			2.9			5			5			5		
	Rated voltage [V]			24 VDC ±10 %											

*1 Horizontal: An external guide is necessary to support the load (Friction coefficient of guide: 0.1 or less). The actual work load and transfer speed change according to the condition of the external guide. Also, speed changes according to the work load. Check “Model Selection” on pages 107 and 108.
Vertical: Speed changes according to the work load. Check “Model Selection” on pages 107 and 108.
Set the acceleration/deceleration values to be 3000 [mm/s²] or less.

*2 Pushing force accuracy is ±20 % (F.S.).

*3 The pushing force values for LEYG16□□ is 35 % to 85 %, for LEYG25□□ is 35 % to 65 %, for LEYG32□□ is 35 % to 85 %, and for LEYG40□□ is 35 % to 65 %. The pushing force values change according to the duty ratio and pushing speed. Check “Model Selection” on page 110.

*4 The speed and force may change depending on the cable length, load and mounting conditions. Furthermore, if the cable length exceeds 5 m, then it will decrease by up to 10 % for each 5 m. (At 15 m: Reduced by up to 20 %)
When [M: Sliding bearing] is selected, the maximum speed of lead [A] is 400 mm/s (at no-load, horizontal mounting).
The speed is also restricted with a horizontal/moment load. Refer to “Model Selection” on page 105.

*5 The allowable speed for the pushing operation

*6 A reference value for correcting an error in reciprocal operation

*7 Impact resistance: No malfunction occurred when it was tested with a drop tester in both an axial direction and a perpendicular direction to the lead screw. (The test was performed with the actuator in the initial state.)
Vibration resistance: No malfunction occurred in a test ranging between 45 to 2000 Hz. The test was performed in both an axial direction and a perpendicular direction to the lead screw. (The test was performed with the actuator in the initial state.)

*8 The power consumption (including the controller) is for when the actuator is operating.

*9 The standby power consumption when operating (including the controller) is for when the actuator is stopped in the set position during the operation. Except during the pushing operation

*10 The maximum instantaneous power consumption (including the controller) is for when the actuator is operating. This value can be used for the selection of the power supply.

*11 With lock only

*12 For an actuator with lock, add the power consumption for the lock.

Specifications

Servo Motor (24 VDC)

Model				LEYG16$^{M}_{L}$□A			LEYG25$^{M}_{L}$□A		
Actuator specifications	Work load [kg]*1	Horizontal	Acceleration/Deceleration at 3000 [mm/s²]	3	6	12	7	15	30
		Vertical	Acceleration/Deceleration at 3000 [mm/s²]	1.5	3.5	7.5	2	5	11
	Pushing force [N]*2 *3			16 to 30	30 to 58	57 to 111	18 to 35	37 to 72	66 to 130
	Speed [mm/s]			1 to 500	1 to 250	1 to 125	2 to 500	1 to 250	1 to 125
	Max. acceleration/deceleration [mm/s²]			3000					
	Pushing speed [mm/s]*4			50 or less			35 or less		
	Positioning repeatability [mm]			±0.02					
	Lost motion [mm]*5			0.1 or less					
	Screw lead [mm]			10	5	2.5	12	6	3
	Impact/Vibration resistance [m/s²]*6			50/20					
	Actuation type			Ball screw + Belt (LEYG□□), Ball screw (LEYG□□D)					
	Guide type			Sliding bearing (LEYG□M), Ball bushing bearing (LEYG□L)					
	Operating temp. range [°C]			5 to 40					
	Operating humidity range [%RH]			90 or less (No condensation)					
Electric specifications	Motor size			□28			□42		
	Motor output [W]			30			36		
	Motor type			Servo motor (24 VDC)					
	Encoder			Incremental A/B (800 pulse/rotation)/Z phase					
	Rated voltage [V]			24 VDC ±10 %					
	Power consumption [W]*7			40			86		
	Standby power consumption when operating [W]*8			4 (Horizontal)/6 (Vertical)			4 (Horizontal)/12 (Vertical)		
	Max. instantaneous power consumption [W]*9			59			96		
Lock unit specifications	Type*10			Non-magnetising lock					
	Holding force [N]			20	39	78	78	157	294
	Power consumption [W]*11			2.9			5		
	Rated voltage [V]			24 VDC ±10 %					

*1 Horizontal: An external guide is necessary to support the load (Friction coefficient of guide: 0.1 or less). The actual work load and transfer speed change according to the condition of the external guide. Vertical: Check "Model Selection" on page 109 for details.
Set the acceleration/deceleration values to be 3000 [mm/s²] or less.
*2 Pushing force accuracy is ±20 % (F.S.).
*3 The thrust setting values for LEYG16□A□ is 60 % to 95 % and for LEYG25□A□ is 70 % to 95 %. The pushing force values change according to the duty ratio and pushing speed. Check "Model Selection" on page 110.
*4 The allowable speed for the pushing operation
*5 A reference value for correcting an error in reciprocal operation
*6 Impact resistance: No malfunction occurred when it was tested with a drop tester in both an axial direction and a perpendicular direction to the lead screw. (The test was performed with the actuator in the initial state.)
Vibration resistance: No malfunction occurred in a test ranging between 45 to 2000 Hz. The test was performed in both an axial direction and a perpendicular direction to the lead screw. (The test was performed with the actuator in the initial state.)
*7 The power consumption (including the controller) is for when the actuator is operating.
*8 The standby power consumption when operating (including the controller) is for when the actuator is stopped in the set position during the operation. Except during the pushing operation
*9 The maximum instantaneous power consumption (including the controller) is for when the actuator is operating. This value can be used for the selection of the power supply.
*10 With lock only
*11 For an actuator with lock, add the power consumption for the lock.

Weight

Weight: Motor Top Mounting Type

Model		LEYG16M					LEYG25M							LEYG32M						
Stroke [mm]		30	50	100	150	200	30	50	100	150	200	250	300	30	50	100	150	200	250	300
Product weight [kg]	Step motor	0.83	0.97	1.20	1.49	1.66	1.67	1.86	2.18	2.60	2.94	3.28	3.54	2.91	3.17	3.72	4.28	4.95	5.44	5.88
	Servo motor	0.83	0.97	1.20	1.49	1.66	1.63	1.82	2.14	2.56	2.90	3.24	3.50	—	—	—	—	—	—	—

Model		LEYG16L					LEYG25L							LEYG32L						
Stroke [mm]		30	50	100	150	200	30	50	100	150	200	250	300	30	50	100	150	200	250	300
Product weight [kg]	Step motor	0.84	0.97	1.14	1.43	1.58	1.68	1.89	2.13	2.56	2.82	3.14	3.38	2.91	3.18	3.57	4.12	4.66	5.17	5.56
	Servo motor	0.84	0.97	1.14	1.43	1.58	1.64	1.85	2.09	2.52	2.78	3.10	3.34	—	—	—	—	—	—	—

Model		LEYG40M							LEYG40L						
Stroke [mm]		30	50	100	150	200	250	300	30	50	100	150	200	250	300
Product weight [kg]	Step motor	3.21	3.47	4.02	4.58	5.25	5.74	6.18	3.21	3.48	3.87	4.42	4.96	5.47	5.86
	Servo motor	—	—	—	—	—	—	—	—	—	—	—	—	—	—

Weight: In-line Motor Type

Model		LEYG16M					LEYG25M							LEYG32M						
Stroke [mm]		30	50	100	150	200	30	50	100	150	200	250	300	30	50	100	150	200	250	300
Product weight [kg]	Step motor	0.83	0.97	1.20	1.49	1.66	1.66	1.85	2.17	2.59	2.93	3.27	3.53	2.90	3.16	3.71	4.27	4.94	5.43	5.87
	Servo motor	0.83	0.97	1.20	1.49	1.66	1.62	1.81	2.13	2.55	2.89	3.23	3.49	—	—	—	—	—	—	—

Model		LEYG16L					LEYG25L							LEYG32L						
Stroke [mm]		30	50	100	150	200	30	50	100	150	200	250	300	30	50	100	150	200	250	300
Product weight [kg]	Step motor	0.84	0.97	1.14	1.43	1.58	1.67	1.88	2.12	2.55	2.81	3.13	3.37	2.90	3.17	3.56	4.11	4.65	5.16	5.55
	Servo motor	0.84	0.97	1.14	1.43	1.58	1.63	1.84	2.08	2.51	2.77	3.09	3.33	—	—	—	—	—	—	—

Model		LEYG40M							LEYG40L						
Stroke [mm]		30	50	100	150	200	250	300	30	50	100	150	200	250	300
Product weight [kg]	Step motor	3.20	3.46	4.01	4.57	5.24	5.73	6.17	3.20	3.47	3.86	4.41	4.95	5.46	5.85
	Servo motor	—	—	—	—	—	—	—	—	—	—	—	—	—	—

Additional Weight

[kg]

Size	16	25	32	40
Lock	0.12	0.26	0.53	0.53
Motor cover	0.02	0.03	0.04	0.05
Lock/Motor cover	0.16	0.32	0.61	0.62

Construction

Motor top mounting type

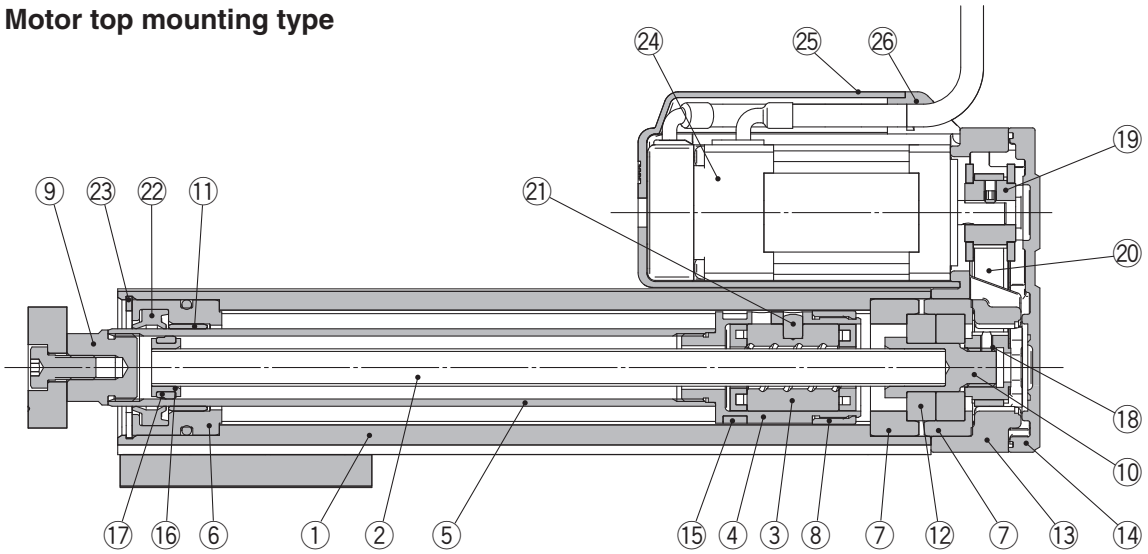

Motor top mounting type
With lock/motor cover

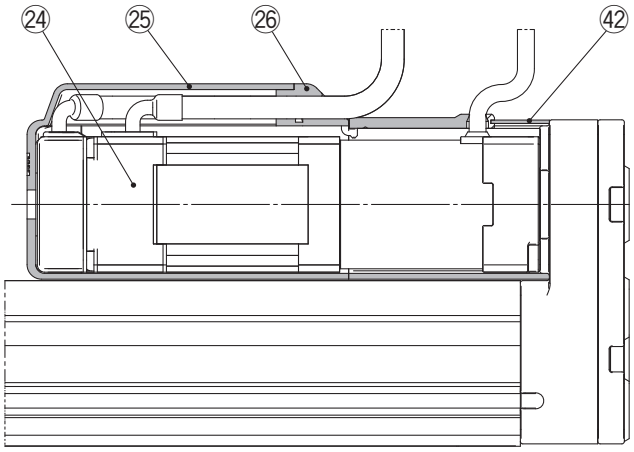

In-line motor type

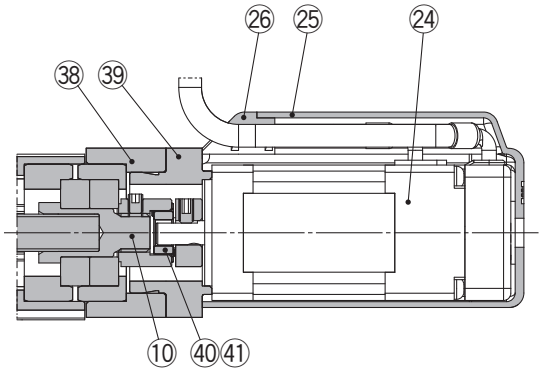

In-line motor type
With lock/motor cover

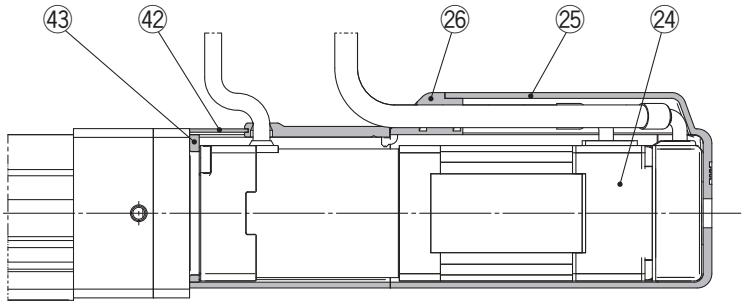

Construction

LEYG□M

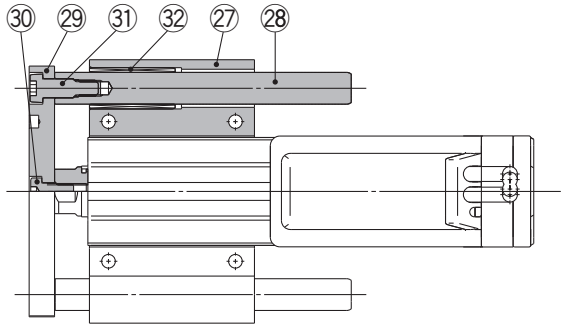

LEYG$^{16}_{25}_{32}_{40}$M: 50st or less

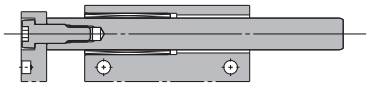

LEYG$^{16}_{25}_{32}_{40}$M: Over 50st

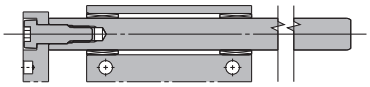

When grease retaining function selected

LEYG$^{25}_{32}_{40}$M□□$^{A}_{B}_{C}$-□□F: 50st or less

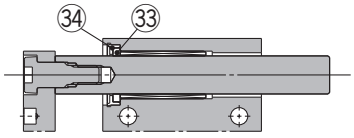

LEYG$^{25}_{32}_{40}$M□□$^{A}_{B}_{C}$-□□F: Over 50st

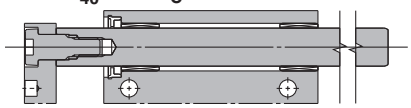

∗ Felt material is inserted to retain grease at the sliding part of the sliding bearing. This lengthens the life of the sliding part, but does not guarantee it permanently.

LEYG□L

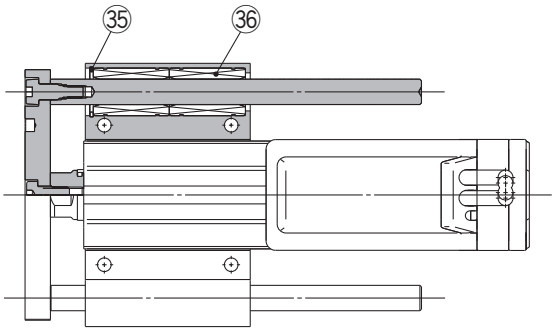

LEYG16L: 30st or less
LEYG$^{25}_{32}_{40}$L: 100st or less

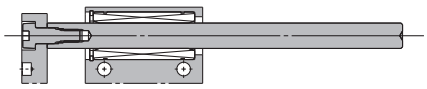

LEYG16L: Over 30st, 100st or less

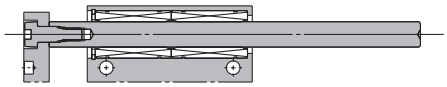

LEYG$^{16}_{25}_{32}_{40}$L: Over 100st

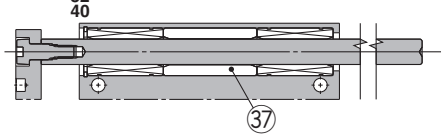

Component Parts

No.	Description	Material	Note
1	**Body**	Aluminium alloy	Anodised
2	**Ball screw shaft**	Alloy steel	
3	**Ball screw nut**	Synthetic resin/Alloy steel	
4	**Piston**	Aluminium alloy	
5	**Piston rod**	Stainless steel	Hard chrome plating
6	**Rod cover**	Aluminium alloy	
7	**Bearing holder**	Aluminium alloy	
8	**Rotation stopper**	POM	
9	**Socket**	Free cutting carbon steel	Nickel plating
10	**Connected shaft**	Free cutting carbon steel	Nickel plating
11	**Bushing**	Bearing alloy	
12	**Bearing**	—	
13	**Return box**	Aluminium die-cast	Coating
14	**Return plate**	Aluminium die-cast	Coating
15	**Magnet**	—	
16	**Wear ring holder**	Stainless steel	Stroke 101 mm or more
17	**Wear ring**	POM	Stroke 101 mm or more
18	**Screw shaft pulley**	Aluminium alloy	
19	**Motor pulley**	Aluminium alloy	
20	**Belt**	—	
21	**Parallel pin**	Stainless steel	
22	**Seal**	NBR	
23	**Retaining ring**	Steel for spring	Phosphate coated
24	**Motor**	—	
25	**Motor cover**	Synthetic resin	Only "With motor cover"
26	**Grommet**	Synthetic resin	Only "With motor cover"
27	**Guide attachment**	Aluminium alloy	Anodised
28	**Guide rod**	Carbon steel	
29	**Plate**	Aluminium alloy	Anodised
30	**Plate mounting cap screw**	Carbon steel	Nickel plating
31	**Guide cap screw**	Carbon steel	Nickel plating
32	**Sliding bearing**	Bearing alloy	
33	**Lube-retainer**	Felt	
34	**Holder**	Resin	
35	**Retaining ring**	Steel for spring	Phosphate coated
36	**Ball bushing**	—	
37	**Spacer**	Aluminium alloy	Chromated
38	**Motor block**	Aluminium alloy	Anodised
39	**Motor adapter**	Aluminium alloy	Anodised/LEY16, 25 only
40	**Hub**	Aluminium alloy	
41	**Spider**	NBR	
42	**Motor cover with lock**	Aluminium alloy	Only "With lock/motor cover"
43	**Cover support**	Aluminium alloy	Only "With lock/motor cover"

Replacement Parts/Belt

No.	Size	Order no.
20	**16**	LE-D-2-1
	25	LE-D-2-2
	32, 40	LE-D-2-3

Replacement Parts/Grease Pack

Applied portion	Order no.
Piston rod Guide rod	GR-S-010 (10 g) GR-S-020 (20 g)

∗ Apply grease on the piston rod periodically.
Grease should be applied at 1 million cycles or 200 km, whichever comes first.

Dimensions: Motor Top Mounting

∗1 Range within which the rod can move when it returns to origin
Make sure workpieces mounted on the rod do not interfere with the work pieces and facilities around the rod.
∗2 Position after return to origin
∗3 [ ] for when the direction of return to origin has changed
∗4 Through holes cannot be used for size 32/40 with strokes of 50 mm or less.

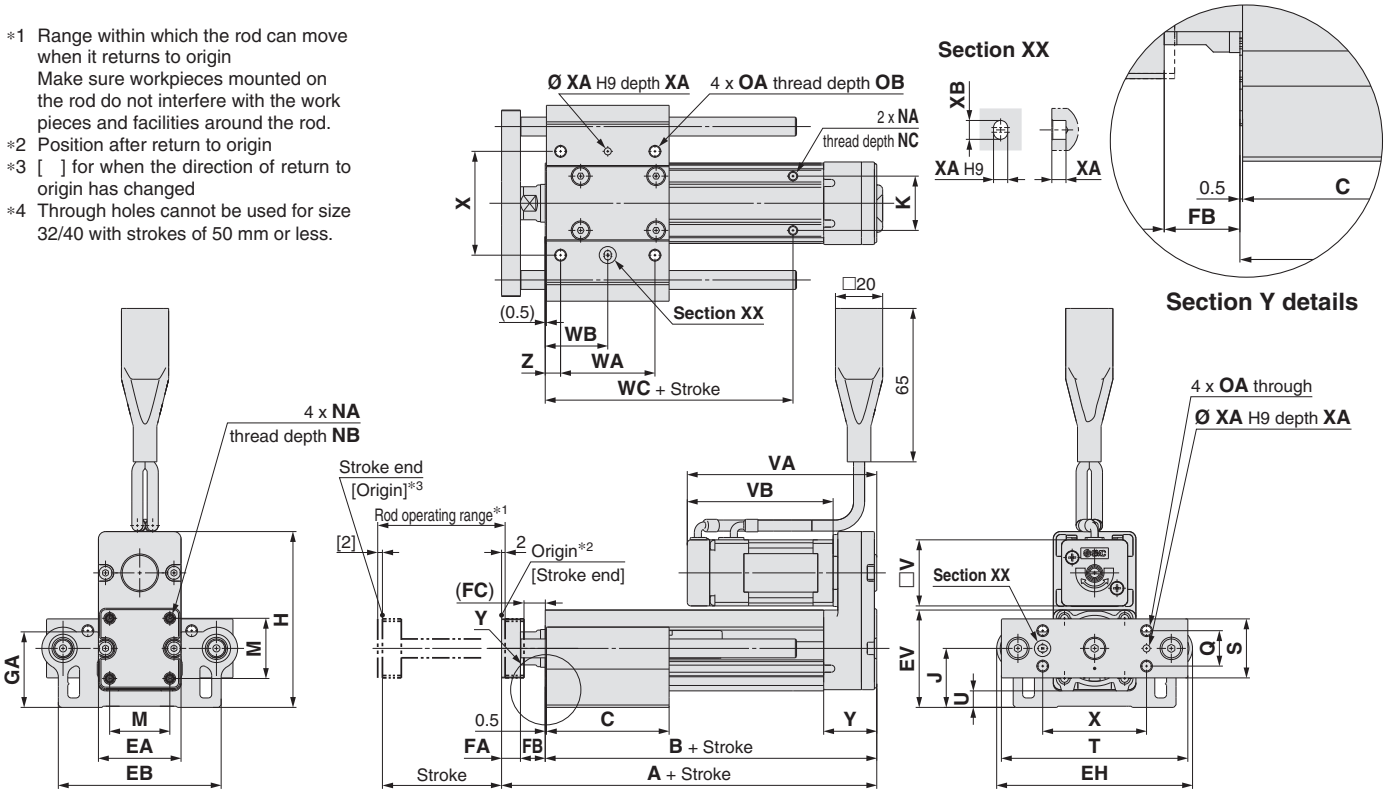

LEYG□L (Ball bushing bearing) [mm]

Size	Stroke range	L	DB
16	90st or less	75	8
	91st or more, 200st or less	105	
25	114st or less	91	10
	115st or more, 190st or less	115	
	191st or more, 300st or less	133	
32 40	114st or less	97.5	13
	115st or more, 190st or less	116.5	
	191st or more, 300st or less	134	

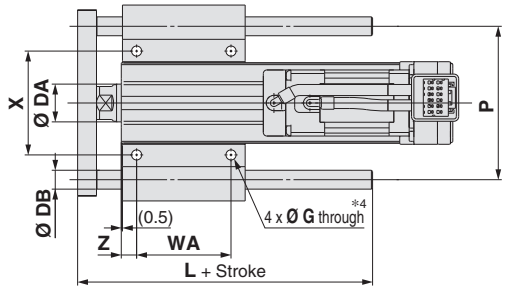

LEYG□M (Sliding bearing) [mm]

Size	Stroke range	L	DB
16	64st or less	51.5	10
	65st or more, 90st or less	74.5	
	91st or more, 200st or less	105	
25	59st or less	67.5	12
	60st or more, 185st or less	100.5	
	186st or more, 300st or less	138	
32 40	54st or less	74	16
	55st or more, 180st or less	107	
	181st or more, 300st or less	144	

LEYG□M, LEYG□L Common

[mm]

Size	Stroke range	A	B	C	DA	EA	EB	EH	EV	FA	FB	FC	G	GA	H	J	K	M	NA	NB	NC
16	39st or less	109	90.5	37	16	35	69	83	41.1	8	10.5	8.5	4.3	31.8	74.3	24.8	23	25.5	M4 x 0.7	7	5.5
	40st or more, 100st or less			52																	
	101st or more, 200st or less	129	110.5	82																	
25	39st or less	141.5	116	50	20	46	85	103	52.3	11	14.5	12.5	5.4	40.3	98.8	30.8	29	34	M5 x 0.8	8	6.5
	40st or more, 100st or less			67.5																	
	101st or more, 124st or less																				
	125st or more, 200st or less	166.5	141	84.5																	
	201st or more, 300st or less			102																	
32 40	39st or less	160.5	130	55	25	60	101	123	63.8	12	18.5	16.5	5.4	50.3	125.3	38.3	30	40	M6 x 1.0	10	8.5
	40st or more, 100st or less			68																	
	101st or more, 124st or less																				
	125st or more, 200st or less	190.5	160	85																	
	201st or more, 300st or less			102																	

Size	Stroke range	OA	OB	P	Q	S	T	U	V	Step motor VA	Step motor VB	Servo motor VA	Servo motor VB	WA	WB	WC	X	XA	XB	Y	Z
16	39st or less	M5 x 0.8	10	65	15	25	79	6.8	28	80.3	61.8	81	62.5	25	19	55	44	3	4	22.5	6.5
	40st or more, 100st or less													40	26.5						
	101st or more, 200st or less													70	41.5	75					
25	39st or less	M6 x 1.0	12	80	18	30	95	6.8	42	85.4	63.4	81.6	59.6	35	26	70	54	4	5	26.5	8.5
	40st or more, 100st or less													50	33.5						
	101st or more, 124st or less															95					
	125st or more, 200st or less													70	43.5						
	201st or more, 300st or less													85	51						
32	39st or less	M6 x 1.0	12	95	28	40	117	7.3	56.4	95.4	68.4	—	—	40	28.5	75	64	5	6	34	8.5
	40st or more, 100st or less													50	33.5						
	101st or more, 124st or less															105					
	125st or more, 200st or less													70	43.5						
	201st or more, 300st or less													85	51						
40	39st or less	M6 x 1.0	12	95	28	40	117	7.3	56.4	117.4	90.4	—	—	40	28.5	75	64	5	6	34	8.5
	40st or more, 100st or less													50	33.5						
	101st or more, 124st or less															105					
	125st or more, 200st or less													70	43.5						
	201st or more, 300st or less													85	51						

Dimensions: Motor Top Mounting

With motor cover: LEYG 16/25/32/40 □□ A/B/C -□C

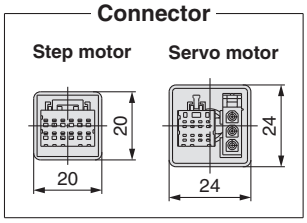

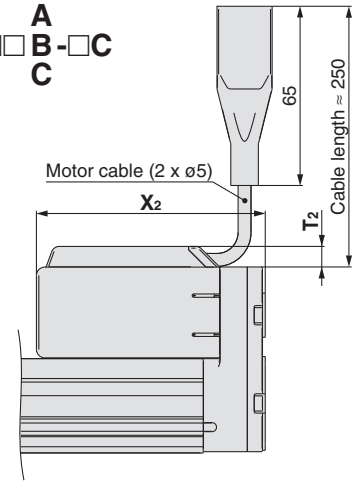

[mm]

Size	T2	X2
16	7.5	83
25	7.5	88.5
32	7.5	98.5
40	7.5	120.5

Motor cover material: Synthetic resin

With lock: LEYG 16/25/32/40 □□ A/B/C -□B

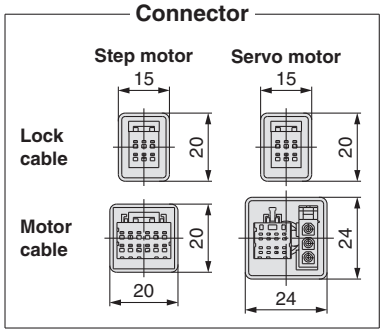

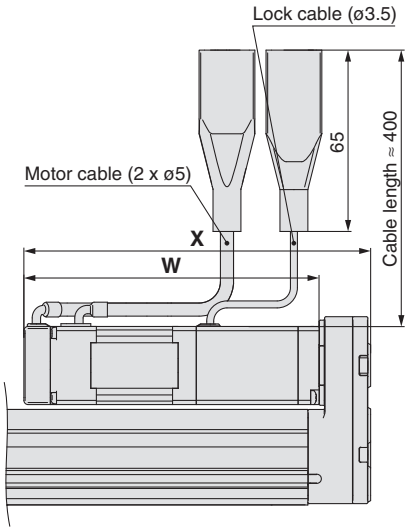

[mm]

Size	Step motor		Servo motor	
	W	X	W	X
16	103.3	121.8	104.0	122.5
25	103.9	125.9	100.1	122.1
32	111.4	138.4	—	—
40	133.4	160.4	—	—

With lock/motor cover: LEYG 16/25/32/40 □□ A/B/C -□W

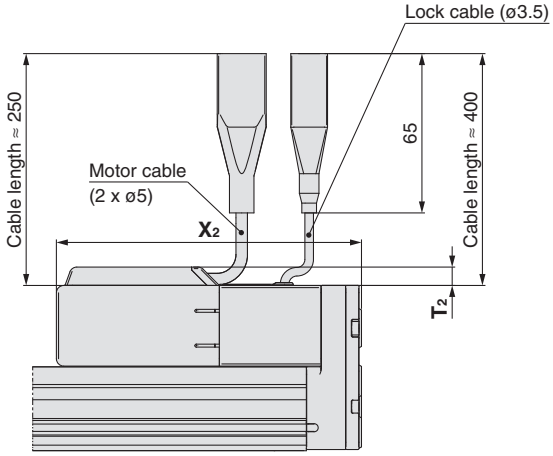

[mm]

Size	T2	X2
16	7.5	124.5
25	7.5	129
32	7.5	141.5
40	7.5	163.5

Dimensions: In-line Motor

∗1 Range within which the rod can move when it returns to origin
Make sure workpieces mounted on the rod do not interfere with the workpieces and facilities around the rod.
∗2 Position after return to origin
∗3 [ ] for when the direction of return to origin has changed

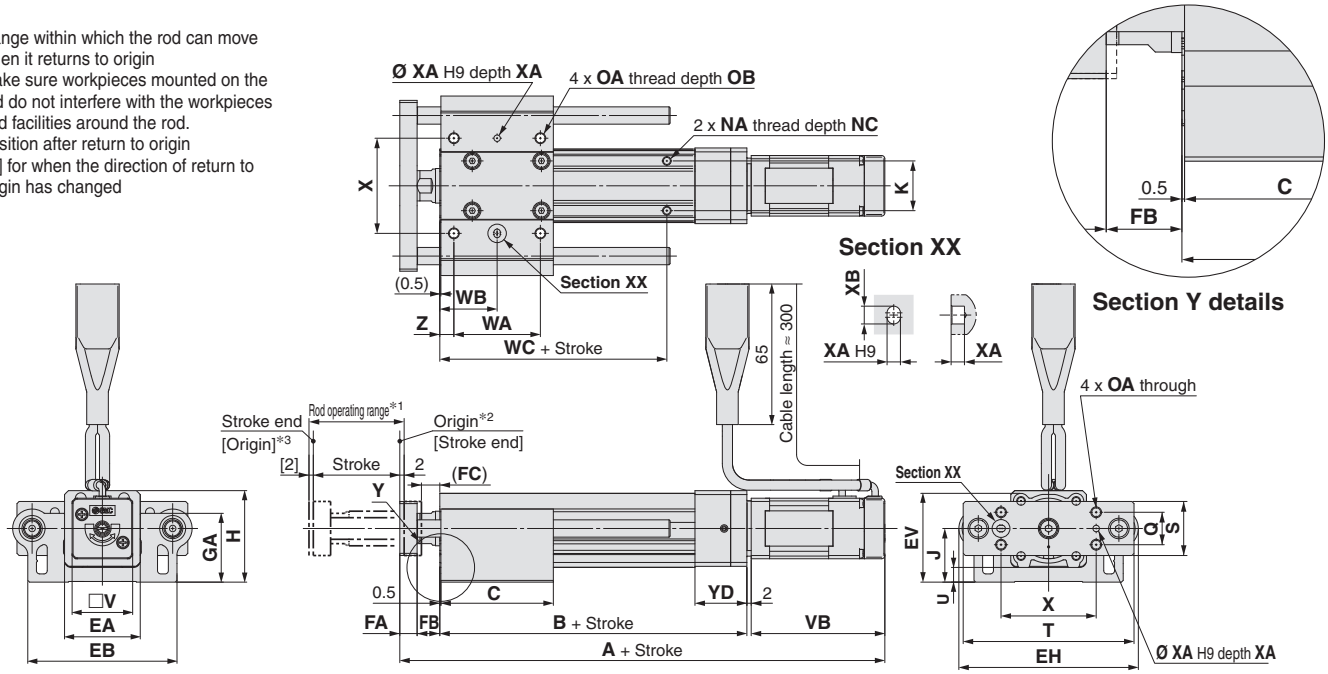

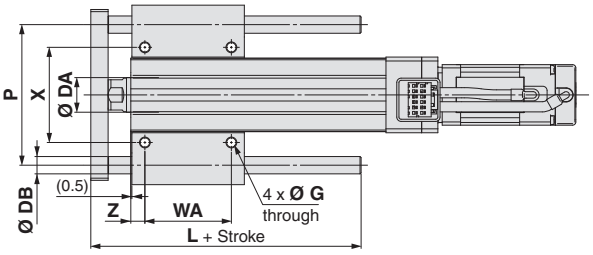

LEYG□L (Ball bushing bearing) [mm]

Size	Stroke range	L	DB
16	90st or less	75	8
	91st or more, 200st or less	105	
25	114st or less	91	10
	115st or more, 190st or less	115	
	191st or more, 300st or less	133	
32 40	114st or less	97.5	13
	115st or more, 190st or less	116.5	
	191st or more, 300st or less	134	

LEYG□M (Sliding bearing) [mm]

Size	Stroke range	L	DB
16	64st or less	51.5	10
	65st or more, 90st or less	74.5	
	91st or more, 200st or less	105	
25	59st or less	67.5	12
	60st or more, 185st or less	100.5	
	186st or more, 300st or less	138	
32 40	54st or less	74	16
	55st or more, 180st or less	107	
	181st or more, 300st or less	144	

LEYG□M, LEYG□L Common

[mm]

Size	Stroke range	A: Step motor	A: Servo motor	B	C	DA	EA	EB	EH	EV	FA	FB	FC	G	GA	H	J	K	NA	NC
16	39st or less	174.3	175	92	37	16	35	69	83	41.1	8	10.5	8.5	4.3	31.8	42.3	24.8	23	M4 x 0.7	5.5
	40st or more, 100st or less				52															
	101st or more, 200st or less	194.3	195	112	82															
25	39st or less	206.4	202.6	115.5	50	20	45	85	103	52.3	11	14.5	12.5	5.4	40.3	53.3	30.8	29	M5 x 0.8	6.5
	40st or more, 100st or less				67.5															
	101st or more, 124st or less	231.4	227.6	140.5																
	125st or more, 200st or less				84.5															
	201st or more, 300st or less				102															
32	39st or less	228.9	—	128	55	25	60	101	123	63.8	12	18.5	16.5	5.4	50.3	68.3	38.3	30	M6 x 1.0	8.5
	40st or more, 100st or less				68															
	101st or more, 124st or less	258.9	—	158																
	125st or more, 200st or less				85															
	201st or more, 300st or less				102															
40	39st or less	250.9	—	128	55	25	60	101	123	63.8	12	18.5	16.5	5.4	50.3	68.3	38.3	30	M6 x 1.0	8.5
	40st or more, 100st or less				68															
	101st or more, 124st or less	280.9	—	158																
	125st or more, 200st or less				85															
	201st or more, 300st or less				102															

Size	Stroke range	OA	OB	P	Q	S	T	U	V	VB: Step motor	VB: Servo motor	WA	WB	WC	X	XA	XB	YD	Z
16	39st or less	M5 x 0.8	10	65	15	25	79	6.8	28	61.8	62.5	25	19	55	44	3	4	24	6.5
	40st or more, 100st or less											40	26.5						
	101st or more, 200st or less											70	41.5	75					
25	39st or less	M6 x 1.0	12	80	18	30	95	6.8	42	63.4	59.6	35	26	70	54	4	5	26	8.5
	40st or more, 100st or less											50	33.5						
	101st or more, 124st or less													95					
	125st or more, 200st or less											70	43.5						
	201st or more, 300st or less											85	51						
32	39st or less	M6 x 1.0	12	95	28	40	117	7.3	56.4	68.4	—	40	28.5	75	64	5	6	32	8.5
	40st or more, 100st or less											50	33.5						
	101st or more, 124st or less													105					
	125st or more, 200st or less											70	43.5						
	201st or more, 300st or less											85	51						
40	39st or less	M6 x 1.0	12	95	28	40	117	7.3	56.4	90.4	—	40	28.5	75	64	5	6	32	8.5
	40st or more, 100st or less											50	33.5						
	101st or more, 124st or less													105					
	125st or more, 200st or less											70	43.5						
	201st or more, 300st or less											85	51						

Dimensions: In-line Motor

With motor cover: LEYG 16/25/32/40 □D□ A/B/C -□C

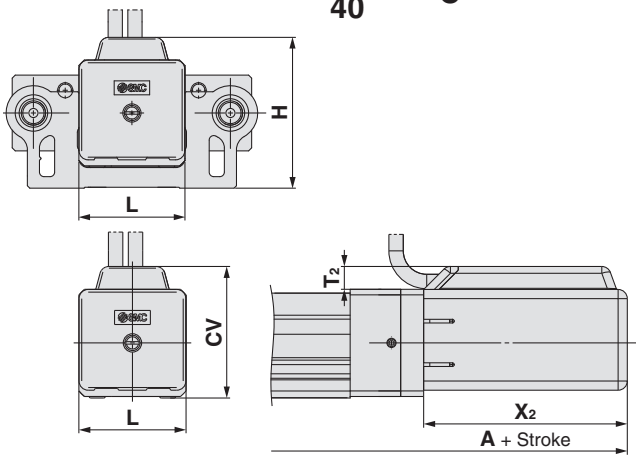

[mm]

Size	Stroke range	A	T2	X2	L	H	CV
16	100st or less	177	7.5	66.5	35	49.8	43
	101st or more, 200st or less	197					
25	100st or less	209.5	7.5	68.5	46	61.3	54.5
	101st or more, 300st or less	234.5					
32	100st or less	232	7.5	73.5	60	75.8	68.5
	101st or more, 300st or less	262					
40	100st or less	254	7.5	95.5	60	75.8	68.5
	101st or more, 300st or less	284					

With lock: LEYG 16/25/32/40 □D□ A/B/C -□B

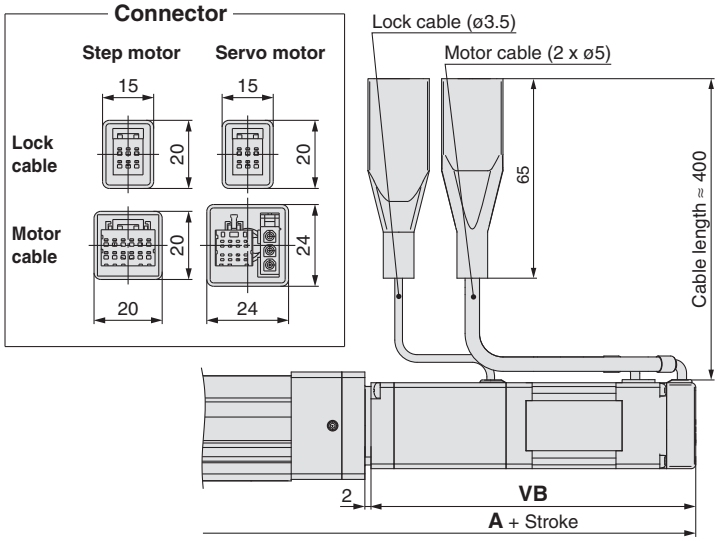

[mm]

Size	Stroke range	Step motor A	Servo motor A	Step motor VB	Servo motor VB
16	100st or less	215.8	216.5	103.3	104
	101st or more, 200st or less	235.8	236.5		
25	100st or less	246.9	243.1	103.9	100.1
	101st or more, 300st or less	271.9	268.1		
32	100st or less	271.9	—	111.4	—
	101st or more, 300st or less	301.9	—		
40	100st or less	293.9	—	133.4	—
	101st or more, 300st or less	323.9	—		

With lock/motor cover: LEYG 16/25/32/40 D□ A/B/C -□W

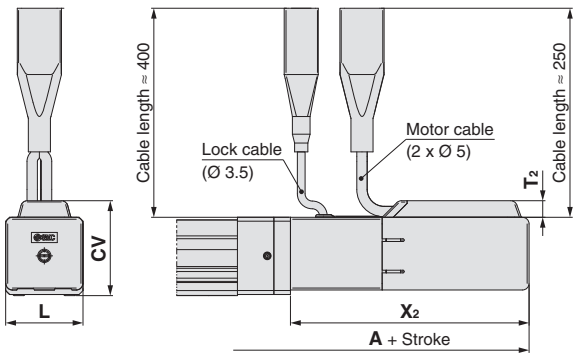

[mm]

Size	Stroke range	A	T2	X2	L	H	CV
16	100st or less	218.5	7.5	108	35	49.8	43
	101st or more, 300st or less	238.5					
25	100st or less	250	7.5	109	46	61.3	54.4
	101st or more, 300st or less	275					
32	100st or less	275	7.5	116.5	60	75.8	68.5
	101st or more, 300st or less	305					
40	100st or less	297	7.5	138.5	60	75.8	68.5
	101st or more, 300st or less	327					

Support Block

●Guide for support block application

When the stroke exceeds 100 mm and the mounting orientation is horizontal, the body will be bent. Mounting the support block is recommended. (Please order it separately from the models shown below.)

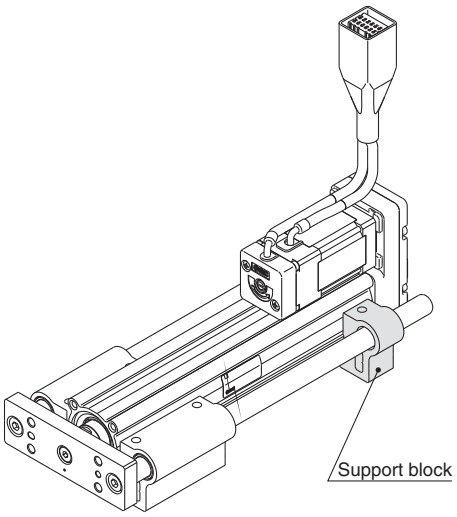

Support Block Model

LEYG-S016

●**Size**

016	For size 16
025	For size 25
032	For size 32, 40

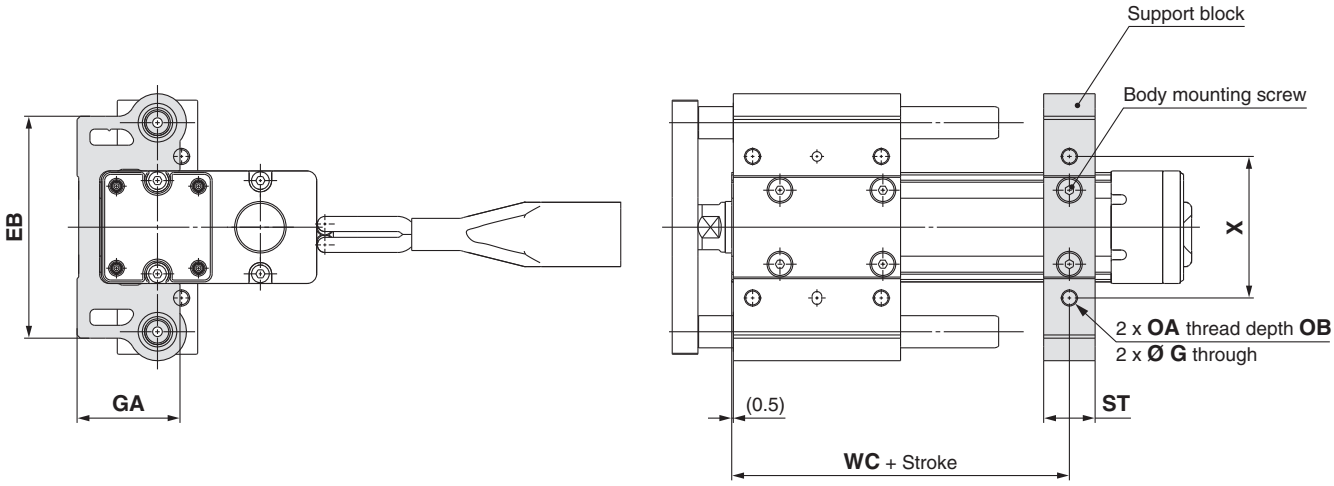

⚠Caution

Do not install the body using only a support block.
The support block should be used only for support.

[mm]

Size	Model	Stroke range	EB	G	GA	OA	OB	ST	WC	X
16	**LEYG-S016**	100st or less	69	4.3	31.8	M5 x 0.8	10	16	55	44
		101st or more, 200st or less							75	
25	**LEYG-S025**	100st or less	85	5.4	40.3	M6 x 1.0	12	20	70	54
		101st or more, 300st or less							95	
32 **40**	**LEYG-S032**	100st or less	101	(5.4)	(50.3)	M6 x 1.0	12	22	75	64
		101st or more, 300st or less							105	

∗ Two body mounting screws are included with the support block.
∗ The through holes of the LEYG-S032 cannot be used for the motor top mounting type. Use taps on the bottom.

Electric Actuator/ Guide Rod Type

LEYG Series LEYG25, 32

∗ Refer to tables ❺ and ⓬ below.

LECY□ Series ▶ p. 143

How to Order

LEY H G 25 M □ S2 B – 100 □ □ – S 2 A1 □

❶ ❷ ❸ ❹ ❺ ❻ ❼ ❽ ❾ ❿ ⓫ ⓬ ⓭

❶ Accuracy

—	Basic type
H	High-precision type

❷ Size

25
32

❸ Bearing type

M	Sliding bearing
L	Ball bushing bearing

❹ Motor mounting position

—	Top mounting
D	In-line

❺ Motor type∗1

Symbol	Type	Output [W]	Actuator size	Compatible driver∗3	UL-compliant
S2	AC servo motor (Incremental encoder)	100	25	LECSA□-S1	—
S3	AC servo motor (Incremental encoder)	200	32	LECSA□-S3	—
S6	AC servo motor (Absolute encoder)	100	25	LECSB□-S5 LECSC□-S5 LECSS□-S5	—
S7	AC servo motor (Absolute encoder)	200	32	LECSB□-S7 LECSC□-S7 LECSS□-S7	—
T6∗2	AC servo motor (Absolute encoder)	100	25	LECSS2-T5	●
T7		200	32	LECSS2-T7	●

∗1 For motor type S2 and S6, the compatible driver part number suffixes are S1 and S5 respectively.
∗2 For motor type T6, the compatible driver part number suffix is T5.
∗3 For details on the driver, refer to page 246.

❻ Lead [mm]

Symbol	LEYG25	LEYG32∗1
A	12	16 (20)
B	6	8 (10)
C	3	4 (5)

∗1 The values shown in ( ) are the leads for the size 32 top mounting type. (Equivalent leads which include the pulley ratio [1.25:1])

❼ Stroke [mm]

30	30
to	to
300	300

∗ For details, refer to the applicable stroke table below.
∗ There is a limit for mounting the size 3 2 top mounting type and strokes of 5 0 mm or less. Refer to the dimensions.

❽ Motor option

—	Without option
B	With lock

❾ Guide option

—	Without option
F	With grease retaining function

∗ Only available for size 25 and 32 sliding bearings (Refer to “Construction” on page 138.)

❿ Cable type∗1 ∗2

—	Without cable
S	Standard cable
R	Robotic cable (Flexible cable)

∗1 The motor and encoder cables are included. (The lock cable is also included when the motor with lock option is selected.)
∗2 Standard cable entry direction is
• Top mounting: (A) Axis side
• In-line: (B) Counter axis side
(Refer to page 264 for details.)

⓫ Cable length∗1 [m]

—	Without cable
2	2
5	5
A	10

∗1 The length of the motor, encoder, and lock cables are the same.

Applicable Stroke Table

●: Standard

Model \ Stroke [mm]	30	50	100	150	200	250	300	Manufacturable stroke range
LEYG25	●	●	●	●	●	●	●	15 to 300
LEYG32	●	●	●	●	●	●	●	20 to 300

∗ Please consult with SMC for non-standard strokes as they are produced as special orders.

For auto switches, refer to pages 101 to 103.

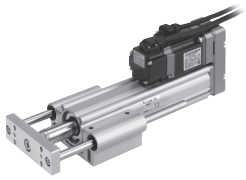

Motor mounting position: Top mounting

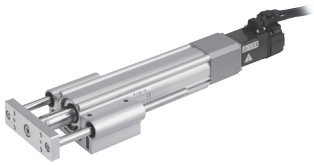

Motor mounting position: In-line

⓬ Driver type*1

	Compatible driver	Power supply voltage [V]	UL-compliant
—	Without driver	—	—
A1	LECSA1-S□	100 to 120	—
A2	LECSA2-S□	200 to 230	—
B1	LECSB1-S□	100 to 120	—
B2	LECSB2-S□	200 to 230	—
C1	LECSC1-S□	100 to 120	—
C2	LECSC2-S□	200 to 230	—
S1	LECSS1-S□	100 to 120	—
S2	LECSS2-S□	200 to 230	—
	LECSS2-T□	200 to 240	●

*1 When a driver type is selected, a cable is included. Select the cable type and cable length.
Example)
S2S2: Standard cable (2 m) + Driver (LECSS2)
S2 : Standard cable (2 m)
— : Without cable and driver

⓭ I/O cable length [m]*1

—	Without cable
H	Without cable (Connector only)
1	1.5

*1 When "Without driver" is selected for driver type, only "—: Without cable" can be selected. Refer to page 265 if I/O cable is required. (Options are shown on page 265.)

Use of auto switches for the guide rod type LEYG series
· Auto switches must be inserted from the front side with the rod (plate) sticking out.
· Auto switches cannot be fixed with the parts hidden behind the guide attachment (the side of the rod that sticks out).
· Please consult with SMC when using auto switches on the side of the rod that sticks out, as it is produced as a special order.

Compatible Driver

Driver type	Pulse input type /Positioning type	Pulse input type	CC-Link direct input type	SSCNET Ⅲ type	SSCNET Ⅲ/H type
Series	**LECSA**	**LECSB**	**LECSC**	**LECSS**	**LECSS-T**
Number of point tables	Up to 7	—	Up to 255 (2 stations occupied)	—	—
Pulse input	○	○	—	—	—
Applicable network	—	—	CC-Link	SSCNET Ⅲ	SSCNET Ⅲ/H
Control encoder	Incremental 17-bit encoder	Absolute 18-bit encoder	Absolute 18-bit encoder	Absolute 18-bit encoder	Absolute 22-bit encoder
Communication function	USB communication	USB communication, RS422 communication		USB communication	
Power supply voltage [V]	100 to 120 VAC (50/60 Hz) 200 to 230 VAC (50/60 Hz)				200 to 240 VAC (50/60 Hz)
Reference page	246				

Specifications

Model			LEYG25□S$^{2}_{6}$/T6 (Top mounting) LEYG25□DS$^{2}_{6}$/T6 (In-line)			LEYG32□S$^{3}_{7}$/T7 (Top mounting)			LEYG32□DS$^{3}_{7}$/T7 (In-line)		
Actuator specifications	Work load [kg]	Horizontal*1	18	50	50	30	60	60	30	60	60
		Vertical	7	15	29	7	17	35	10	22	44
	Force [N]*2 (Set value: 15 to 30 %)*11		65 to 131	127 to 255	242 to 485	79 to 157	154 to 308	294 to 588	98 to 197	192 to 385	368 to 736
	Max. speed [mm/s]		900	450	225	1200	600	300	1000	500	250
	Pushing speed [mm/s]*3		35 or less			30 or less			30 or less		
	Max. acceleration/deceleration [mm/s²]		5000			5000					
	Positioning repeatability [mm]	Basic type	±0.02								
		High-precision type	±0.01								
	Lost motion [mm]*4	Basic type	0.1 or less								
		High-precision type	0.05 or less								
	Lead [mm] (including pulley ratio)		12	6	3	20	10	5	16	8	4
	Impact/Vibration resistance [m/s²]*5		50/20			50/20					
	Actuation type		Ball screw + Belt [1:1]/Ball screw			Ball screw + Belt [1:1.25]			Ball screw		
	Guide type		Sliding bearing (LEYG□M), Ball bushing bearing (LEYG□L)								
	Operating temperature range [°C]		5 to 40			5 to 40					
	Operating humidity range [%RH]		90 or less (No condensation)			90 or less (No condensation)					
	Regeneration option		May be required depending on speed and work load (Refer to page 113.)								
Electric specifications	Motor output/Size		100 W/□40			200 W/□60					
	Motor type		AC servo motor (100/200 VAC)			AC servo motor (100/200 VAC)					
	Encoder		Motor type S2, S3: Incremental 17-bit encoder (Resolution: 131072 p/rev) Motor type S6, S7: Absolute 18-bit encoder (Resolution: 262144 p/rev) Motor type T6,T7: Absolute 22-bit encoder (Resolution: 4194304 p/rev)								
	Power consumption [W]*6	Horizontal	45			65			65		
		Vertical	145			175			175		
	Standby power consumption when operating [W]*7	Horizontal	2			2			2		
		Vertical	8			8			8		
	Max. instantaneous power consumption [W]*8		445			724			724		
Lock unit specifications	Type*9		Non-magnetising lock			Non-magnetising lock					
	Holding force [N]		131	255	485	157	308	588	197	385	736
	Power consumption at 20 °C [W]*10		6.3			7.9			7.9		
	Rated voltage [V]		24 VDC $^{0}_{-10\ \%}$								

*1 This is the maximum value of the horizontal work load. An external guide is necessary to support the load. The actual work load changes according to the condition of the external guide. Confirm the load using the actual device.
*2 The force setting range (set values for the driver) for the force control with the torque control mode. Set it with reference to "Force Conversion Graph" on page 114. When the control equivalent to the pushing operation of the controller LECP series is performed, select the LECSS driver and combine it with the Simple Motion (manufactured by Mitsubishi Electric Corporation) which has a pushing operation function.
*3 The allowable collision speed for collision with the workpiece with the torque control mode
*4 A reference value for correcting an error in reciprocal operation
*5 Impact resistance: No malfunction occurred when the actuator was tested with a drop tester in both an axial direction and a perpendicular direction to the lead screw. (The test was performed with the actuator in the initial state.)
Vibration resistance: No malfunction occurred in a test ranging between 45 to 2000 Hz. The test was performed in both an axial direction and a perpendicular direction to the lead screw. (The test was performed with the actuator in the initial state.)
*6 The power consumption (including the driver) is for when the actuator is operating.
*7 The standby power consumption when operating (including the driver) is for when the actuator is stopped in the set position during operation.
*8 The maximum instantaneous power consumption (including the driver) is for when the actuator is operating.
*9 Only when motor option "With lock" is selected
*10 For an actuator with lock, add the power consumption for the lock.
*11 For motor type T6 and T7, the set value is from 12 to 24 %.

Weight

Weight: Motor Top Mounting Type

[kg]

Series		LEYG25MS$^{2}_{6}$/T6							LEYG32MS$^{3}_{7}$/T7						
Stroke [mm]		30	50	100	150	200	250	300	30	50	100	150	200	250	300
Motor type	Incremental encoder	1.80	1.99	2.31	2.73	3.07	3.41	3.67	3.24	3.50	4.05	4.80	5.35	5.83	6.28
	Absolute encoder [S$^{6}_{7}$]	1.86	2.05	2.37	2.79	3.13	3.47	3.73	3.18	3.44	3.99	4.74	5.29	5.77	6.22
	Absolute encoder [T$^{6}_{7}$]	1.8	2.0	2.4	2.8	3.1	3.5	3.7	3.2	3.4	4.0	4.7	5.3	5.7	6.2

Series		LEYG25LS$^{2}_{6}$/T6							LEYG32LS$^{3}_{7}$/T7						
Stroke [mm]		30	50	100	150	200	250	300	30	50	100	150	200	250	300
Motor type	Incremental encoder	1.81	2.02	2.26	2.69	2.95	3.27	3.51	3.24	3.51	3.9	4.64	5.06	5.56	5.96
	Absolute encoder [S$^{6}_{7}$]	1.87	2.08	2.32	2.75	3.01	3.33	3.57	3.18	3.45	3.84	4.58	5.00	5.50	5.90
	Absolute encoder [T$^{6}_{7}$]	1.9	2.1	2.3	2.7	3.0	3.3	3.6	3.2	3.4	3.8	4.6	5.0	5.5	5.9

Weight: In-line Motor Type

[kg]

Series		LEYG25MDS$^{2}_{6}$/T6							LEYG32MDS$^{3}_{7}$/T7						
Stroke [mm]		30	50	100	150	200	250	300	30	50	100	150	200	250	300
Motor type	Incremental encoder	1.83	2.02	2.34	2.76	3.10	3.44	3.70	3.26	3.52	4.07	4.82	5.37	5.85	6.30
	Absolute encoder [S$^{6}_{7}$]	1.89	2.08	2.40	2.82	3.16	3.50	3.76	3.20	3.46	4.01	4.76	5.31	5.79	6.24
	Absolute encoder [T$^{6}_{7}$]	1.9	2.1	2.4	2.8	3.1	3.5	3.7	3.2	3.4	4.0	4.7	5.3	5.8	6.2

Series		LEYG25LDS$^{2}_{6}$/T6							LEYG32LDS$^{3}_{7}$/T7						
Stroke [mm]		30	50	100	150	200	250	300	30	50	100	150	200	250	300
Motor type	Incremental encoder	1.84	2.05	2.29	2.72	2.98	3.30	3.54	3.26	3.53	3.92	4.66	5.08	5.58	5.98
	Absolute encoder [S$^{6}_{7}$]	1.90	2.11	2.35	2.78	3.04	3.36	3.60	3.20	3.47	3.86	4.60	5.02	5.52	5.92
	Absolute encoder [T$^{6}_{7}$]	1.9	2.1	2.3	2.8	3.0	3.3	3.6	3.2	3.4	3.8	4.6	5.0	5.5	5.9

Additional Weight

[kg]

Size		25	32
Lock	Incremental encoder	0.20	0.40
	Absolute encoder [S$^{6}_{7}$]	0.30	0.66
	Absolute encoder [T$^{6}_{7}$]	0.3	0.7

Construction

Motor mounting position: Top mounting type

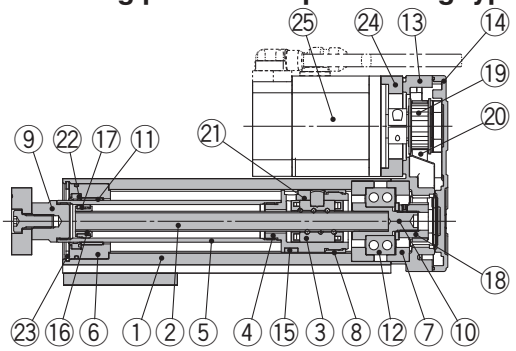

Motor mounting position: In-line type

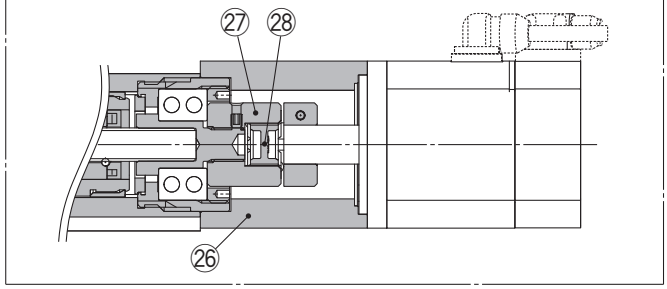

LEYG□M

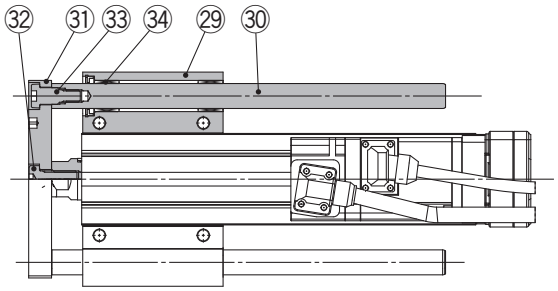

LEYG25/32M: 50st or less

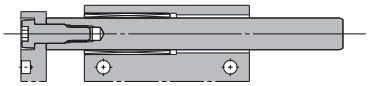

LEYG25/32M: Over 50st

When grease retaining function selected

LEYG25/32M: 50st or less

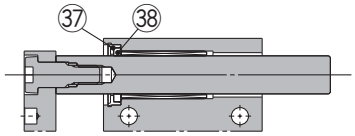

LEYG25/32M: Over 50st

LEYG□L

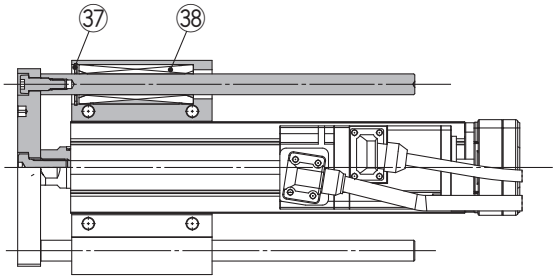

LEYG25/32L: 100st or less

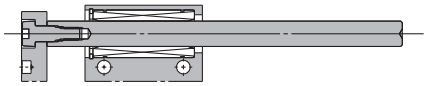

LEYG25/32L: Over 100st

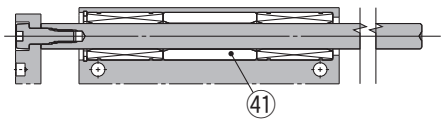

Component Parts

No.	Description	Material	Note
1	**Body**	Aluminium alloy	Anodised
2	**Ball screw shaft**	Alloy steel	
3	**Ball screw nut**	Synthetic resin/Alloy steel	
4	**Piston**	Aluminium alloy	
5	**Piston rod**	Stainless steel	Hard chrome plating
6	**Rod cover**	Aluminium alloy	
7	**Bearing holder**	Aluminium alloy	
8	**Rotation stopper**	POM	
9	**Socket**	Free cutting carbon steel	Nickel plating
10	**Connected shaft**	Free cutting carbon steel	Nickel plating
11	**Bushing**	Bearing alloy	
12	**Bearing**	—	
13	**Return box**	Aluminium die-cast	Coating
14	**Return plate**	Aluminium die-cast	Coating
15	**Magnet**	—	
16	**Wear ring holder**	Stainless steel	Stroke 101 mm or more
17	**Wear ring**	POM	Stroke 101 mm or more
18	**Screw shaft pulley**	Aluminium alloy	
19	**Motor pulley**	Aluminium alloy	
20	**Belt**	—	
21	**Parallel pin**	Stainless steel	
22	**Seal**	NBR	
23	**Retaining ring**	Steel for spring	Phosphate coated
24	**Motor adapter**	Aluminium alloy	Coating
25	**Motor**	—	
26	**Motor block**	Aluminium alloy	Coating

No.	Description	Material	Note
27	**Hub**	Aluminium alloy	
28	**Spider**	Urethane	
29	**Guide attachment**	Aluminium alloy	Anodised
30	**Guide rod**	Carbon steel	
31	**Plate**	Aluminium alloy	Anodised
32	**Plate mounting cap screw**	Carbon steel	Nickel plating
33	**Guide cap screw**	Carbon steel	Nickel plating
34	**Sliding bearing**	Bearing alloy	
35	**Felt**	Felt	
36	**Holder**	Synthetic resin	
37	**Retaining ring**	Steel for spring	Phosphate coated
38	**Ball bushing**	—	
39	**Spacer**	Aluminium alloy	Chromated

Support Block

Size	Order no.
25	LEYG-S025
32	LEYG-S032

∗ Two body mounting screws are included with the support block.

Replacement Parts/Belt

Size	Order no.
25	LE-D-2-2
32	LE-D-2-4

Replacement Parts/Grease Pack

Applied portion	Order no.
Piston rod Guide rod	GR-S-010 (10 g) GR-S-020 (20 g)

∗ Apply grease on the piston rod periodically.
Grease should be applied at 1 million cycles or 200 km, whichever comes first.

Dimensions: Motor Top Mounting

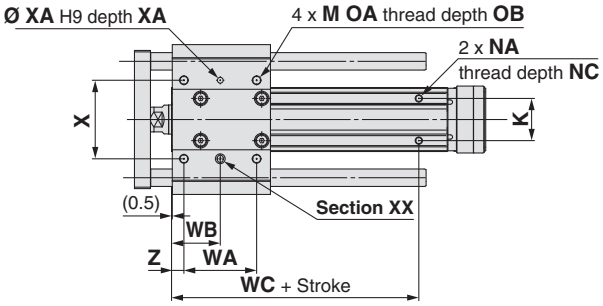

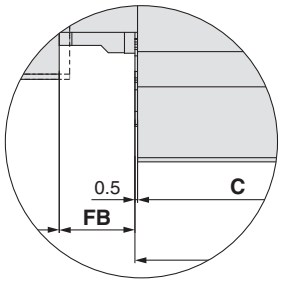

Section Y details

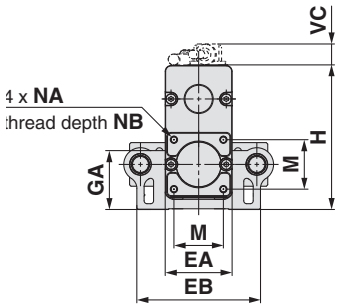

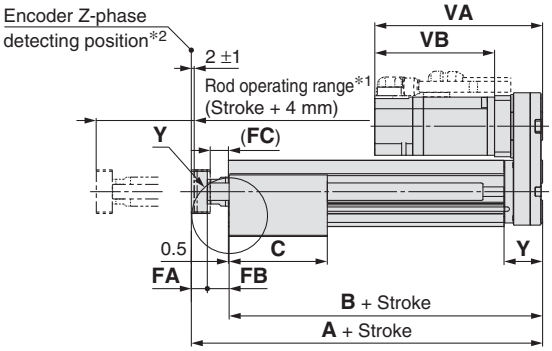

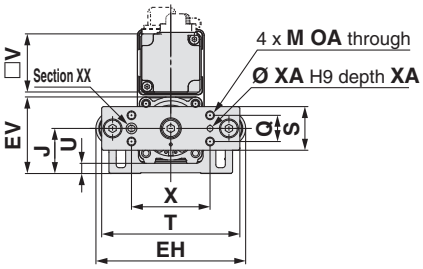

*1 Range within which the rod can move
Make sure workpieces mounted on the rod do not interfere with the workpieces and facilities around the rod.
*2 The Z-phase first detecting position from the stroke end of the motor side
*3 Through holes cannot be used for size 32 with strokes of 50 mm or less.

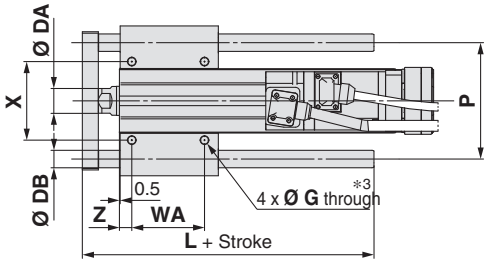

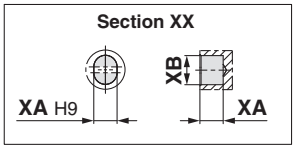

LEYG□L (Ball bushing bearing) [mm]

Size	Stroke range [mm]	L	DB
25	Up to 114	91	10
	115 to 190	115	
	191 to 300	133	
32	Up to 114	97.5	13
	115 to 190	116.5	
	191 to 300	134	

LEYG□M (Sliding bearing) [mm]

Size	Stroke range [mm]	L	DB
25	Up to 59	67.5	12
	60 to 185	100.5	
	186 to 300	138	
32	Up to 59	74	16
	60 to 185	107	
	186 to 300	144	

LEYG□M, LEYG□L Common

[mm]

Size	Stroke range [mm]	A	B	C	DA	EA	EB	EH	EV	FA	FB	FC	G	GA	H	J	K	M	NA	NB	NC
25	Up to 39	141.5	116	50	20	46	85	103	52.3	11	14.5	12.5	5.4	40.3	98.8	30.8	29	34	M5 x 0.8	8	6.5
	40 to 100			67.5																	
	101 to 124	166.5	141																		
	125 to 200			84.5																	
	201 to 300			102																	
32	Up to 39	160.5	130	55	25	60	101	123	63.8	12	18.5	16.5	5.4	50.3	125.3	38.3	30	40	M6 x 1.0	10	8.5
	40 to 100			68																	
	101 to 124	190.5	160																		
	125 to 200			85																	
	201 to 300			102																	

Size	Stroke range [mm]	OA	OB	P	Q	S	T	U	V	WA	WB	WC	X	XA	XB	Y	Z
25	Up to 39	M6 x 1.0	12	80	18	30	95	6.8	40	35	26	70	54	4	5	26.5	8.5
	40 to 100									50	33.5						
	101 to 124											95					
	125 to 200									70	43.5						
	201 to 300									85	51						
32	Up to 39	M6 x 1.0	12	95	28	40	117	7.3	60	40	28.5	75	64	5	6	34	8.5
	40 to 100									50	33.5						
	101 to 124											105					
	125 to 200									70	43.5						
	201 to 300									85	51						

Size	Incremental encoder						Absolute encoder [S6/S7]						Absolute encoder [T6/T7]					
	Without lock			With lock			Without lock			With lock			Without lock			With lock		
	VA	VB	VC	VA	VB	VC	VA	VB	VC	VA	VB	VC	VA	VB	VC	VA	VB	VC
25	120	87	14.1	156.9	123.9	15.8	115.4	82.4	14.1	156.5	123.5	15.8	115.4	82.4	14.1	156	123	15.8
32	128.2	88.2	17.1	156.8	116.8	17.1	116.6	76.6	17.1	156.1	116.1	17.1	116.6	76.6	17.1	153.4	113.4	17.1

Dimensions: In-line Motor

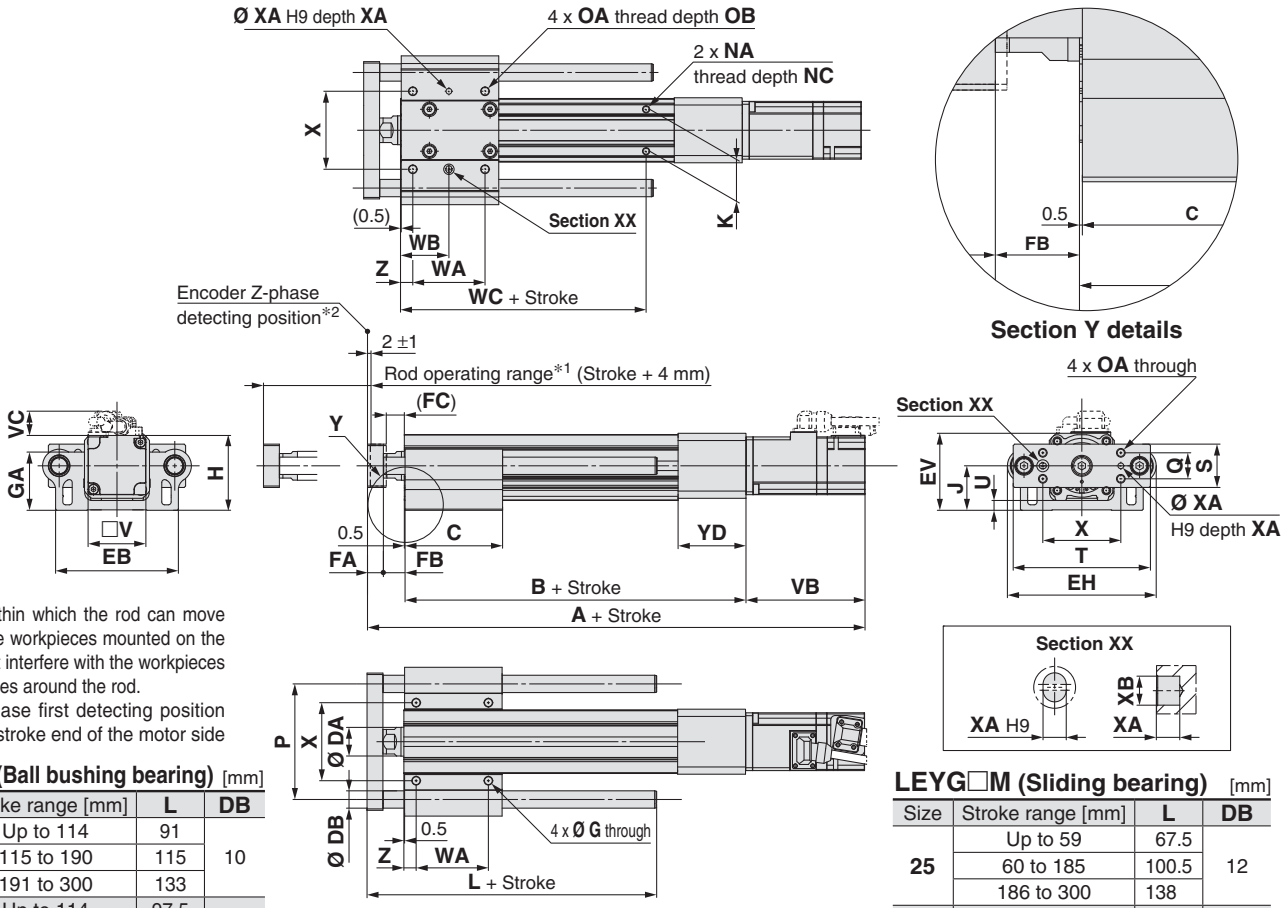

*1 Range within which the rod can move
Make sure workpieces mounted on the rod do not interfere with the workpieces and facilities around the rod.

*2 The Z-phase first detecting position from the stroke end of the motor side

LEYG□L (Ball bushing bearing) [mm]

Size	Stroke range [mm]	L	DB
25	Up to 114	91	10
	115 to 190	115	
	191 to 300	133	
32	Up to 114	97.5	13
	115 to 190	116.5	
	191 to 300	134	

LEYG□M (Sliding bearing) [mm]

Size	Stroke range [mm]	L	DB
25	Up to 59	67.5	12
	60 to 185	100.5	
	186 to 300	138	
32	Up to 59	74	16
	60 to 185	107	
	186 to 300	144	

LEYG□M, LEYG□L Common

[mm]

Size	Stroke range [mm]	B	C	DA	EB	EH	EV	FA	FB	FC	G	GA	H	J	K	NA	NC
25	Up to 39	136.5	50	20	85	103	52.3	11	14.5	12.5	5.4	40.3	53.3	30.8	29	M5 x 0.8	6.5
	40 to 100		67.5														
	101 to 124	161.5															
	125 to 200		84.5														
	201 to 300		102														
32	Up to 39	156	55	25	101	123	63.8	12	18.5	16.5	5.4	50.3	68.3	38.3	30	M6 x 1.0	8.5
	40 to 100		68														
	101 to 124	186															
	125 to 200		85														
	201 to 300		102														

Size	Stroke range [mm]	OA	OB	P	Q	S	T	U	V	WA	WB	WC	X	XA	XB	YD	Z
25	Up to 39	M6 x 1.0	12	80	18	30	95	6.8	40	35	26	70	54	4	5	47	8.5
	40 to 100									50	33.5						
	101 to 124											95					
	125 to 200									70	43.5						
	201 to 300									85	51						
32	Up to 39	M6 x 1.0	12	95	28	40	117	7.3	60	40	28.5	75	64	5	6	60	8.5
	40 to 100									50	33.5						
	101 to 124											105					
	125 to 200									70	43.5						
	201 to 300									85	51						

Size	Stroke range [mm]	Incremental encoder						Absolute encoder [S6/S7]						Absolute encoder [T6/T7]					
		Without lock			With lock			Without lock			With lock			Without lock			With lock		
		A	VB	VC	A	VB	VC	A	VB	VC	A	VB	VC	A	VB	VC	A	VB	VC
25	15 to 100	249	87	14.6	285.9	123.9	16.3	244.4	82.4	14.6	285.5	123.5	16.3	244.4	82.4	14.6	285	123	16.3
	105 to 300	274			310.9			269.4			310.5			269.4			310		
32	15 to 100	274.7	88.2	17.1	303.3	116.8	17.1	263.1	76.6	17.1	302.6	116.1	17.1	263.1	76.6	17.1	299.9	113.4	17.1
	105 to 300	304.7			333.3			293.1			332.6			293.1			329.9		

Support Block

●Guide for support block application

When the stroke exceeds 100 mm and the mounting orientation is horizontal, the body will be bent. Mounting the support block is recommended. (Please order it separately from the models shown below.)

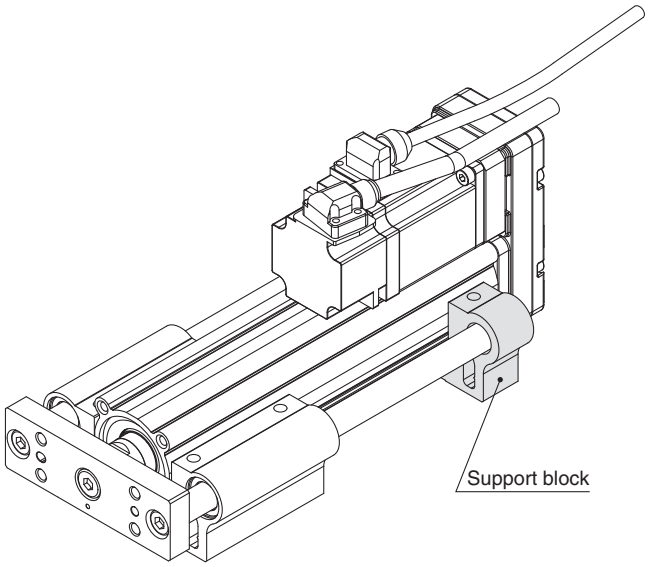

Support Block Model

LEYG-S025

●**Size**

025	For size 25
032	For size 32

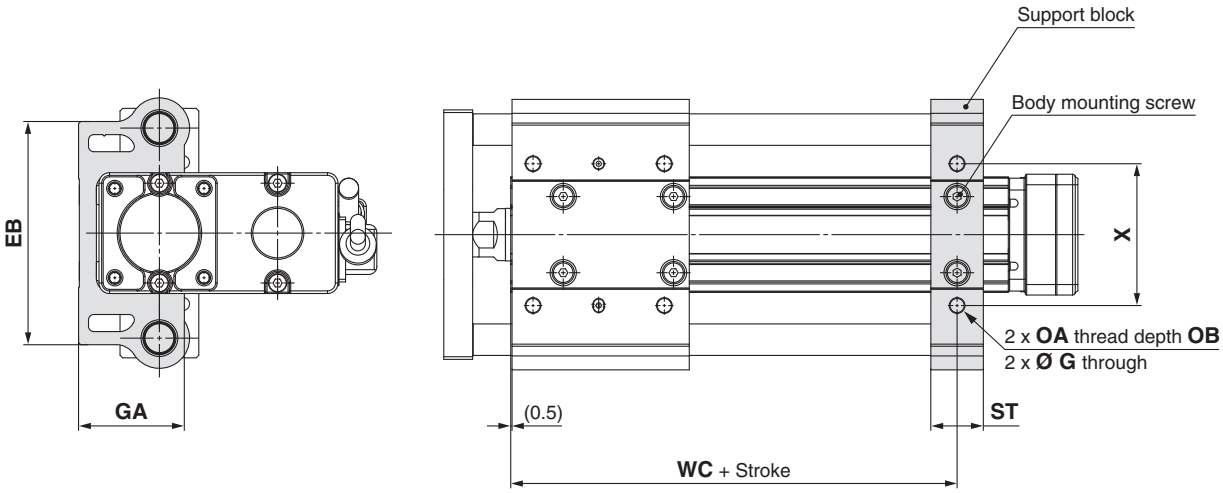

⚠Caution

Do not install the body using only a support block.
The support block should be used only for support.

[mm]

Size	Model	Stroke range	EB	G	GA	OA	OB	ST	WC	X
25	**LEYG-S025**	100st or less	85	5.4	40.3	M6 x 1.0	12	20	70	54
		101st or more, 300st or less							95	
32	**LEYG-S032**	100st or less	101	(5.4)	(50.3)	M6 x 1.0	12	22	75	64
		101st or more, 300st or less							105	

∗ Two body mounting screws are included with the support block.
∗ The through holes of the LEYG-S032 cannot be used for the motor top mounting type. Use taps on the bottom.

Electric Actuator/ Guide Rod Type

LEYG Series LEYG25, 32

LECS□ Series ▶ p. 135

How to Order

LEY H G 25 M □ V6 B – 200 □ □ – S 3 M2 □

❶ ❷ ❸ ❹ ❺ ❻ ❼ ❽ ❾ ❿ ⓫ ⓬ ⓭

❶ Accuracy

—	Basic type
H	High-precision type

❷ Size

25	
32	

❸ Bearing type

M	Sliding bearing
L	Ball bushing bearing

❹ Motor mounting position

—	Top mounting
D	In-line

❺ Motor type

Symbol	Type	Output [W]	Actuator size	Compatible driver
V6*1	AC servo motor (Absolute encoder)	100	25	LECYM2-V5 LECYU2-V5
V7		200	32	LECYM2-V7 LECYU2-V7

*1 For motor type V6, the compatible driver part number suffix is V5.

❻ Lead [mm]

Symbol	LEYG25	LEYG32*1
A	12	16 (20)
B	6	8 (10)
C	3	4 (5)

*1 The values shown in ( ) are the leads for the top mounting type. (Equivalent leads which include the pulley ratio [1.25:1])

❼ Stroke [mm]

30	30
to	to
300	300

* For details, refer to the applicable stroke table below.
* There is a limit for mounting the size 3 2 top mounting type and strokes of 5 0 mm or less. Refer to the dimensions.

❽ Motor option

—	Without option
B	With lock

* When "With lock" is selected for the top mounting type, the motor body will stick out from the end of the body for size 25 with strokes of 30 mm or less. Check for interference with workpieces before selecting a model.

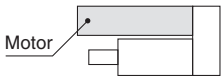

❾ Guide option

—	Without option
F	With grease retaining function

* Only available for the sliding bearing

❿ Cable type*1

—	Without cable
S	Standard cable
R	Robotic cable (Flexible cable)

*1 The motor and encoder cables are included. The motor cable for lock option is included when the motor with lock option is selected.

⓫ Cable length [m]*1

—	Without cable
3	3
5	5
A	10
C	20

*1 The length of the motor and encoder cables are the same. (For with lock)

Applicable Stroke Table

●: Standard

Model \ Stroke [mm]	30	50	100	150	200	250	300	Manufacturable stroke range
LEYG25	●	●	●	●	●	●	●	15 to 300
LEYG32	●	●	●	●	●	●	●	20 to 300

* Please consult with SMC for non-standard strokes as they are produced as special orders.

For auto switches, refer to pages 101 to 103.

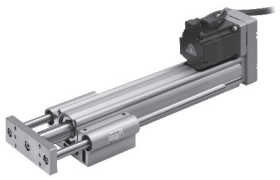

Motor mounting position: Top mounting

Motor mounting position: In-line

⓬ Driver type

	Compatible driver	Power supply voltage [V]
—	Without driver	—
M2	LECYM2-V□	200 to 230
U2	LECYU2-V□	200 to 230

∗ When a driver type is selected, a cable is included.
Select the cable type and cable length.

⓭ I/O cable length [m]∗1

—	Without cable
H	Without cable (Connector only)
1	1.5

∗1 When "Without driver" is selected for driver type, only "—: Without cable" can be selected.
Refer to page 278 if I/O cable is required.
(Options are shown on page 278.)

Use of auto switches for the guide rod type LEYG series
· Auto switches must be inserted from the front side with the rod (plate) sticking out.
· Auto switches cannot be fixed with the parts hidden behind the guide attachment (the side of the rod that sticks out).
· Please consult with SMC when using auto switches on the side of the rod that sticks out, as it is produced as a special order.

Compatible Driver

Driver type	MECHATROLINK-Ⅱ type	MECHATROLINK-Ⅲ type
Series	**LECYM**	**LECYU**
Applicable network	MECHATROLINK-Ⅱ	MECHATROLINK-Ⅲ
Control encoder	Absolute 20-bit encoder	
Communication device	USB communication, RS-422 communication	
Power supply voltage [V]	200 to 230 VAC (50/60 Hz)	
Reference page	271	

Specifications

Model			LEYG25$^{M}_{L}$V6 (Top mounting) LEYG25$^{M}_{L}$DV6 (In-line)			LEYG32$^{M}_{L}$V7 (Top mounting)			LEYG32$^{M}_{L}$DV7 (In-line)		
Actuator specifications	Work load [kg]	Horizontal*1	18	50	50	30	60	60	30	60	60
		Vertical	7	15	29	7	17	35	10	22	44
	Force [N]*2 (Set value: 45 to 90 %)		65 to 131	127 to 255	242 to 485	79 to 157	154 to 308	294 to 588	98 to 197	192 to 385	368 to 736
	Max. speed [mm/s]		900	450	225	1200	600	300	1000	500	250
	Pushing speed [mm/s]*3		35 or less			30 or less			30 or less		
	Max. acceleration/deceleration [mm/s²]		5000			5000					
	Positioning repeatability [mm]	Basic type	±0.02			±0.02					
		High-precision type	±0.01			±0.01					
	Lost motion [mm]	Basic type	0.1 or less			0.1 or less					
		High-precision type	0.05 or less			0.05 or less					
	Lead [mm] (including pulley ratio)		12	6	3	20	10	5	16	8	4
	Impact/Vibration resistance [m/s²]*4		50/20			50/20					
	Actuation type		Ball screw + Belt [1:1]/Ball screw			Ball screw + Belt [1:1.25]			Ball screw		
	Guide type		Sliding bearing (LEYG□M), Ball bushing bearing (LEYG□L)								
	Operating temperature range [°C]		5 to 40			5 to 40					
	Operating humidity range [%RH]		90 or less (No condensation)			90 or less (No condensation)					
	Conditions for*5 "Regenerative resistor" [kg]	Horizontal	Not required			Not required					
		Vertical	5 or more			2 or more					
Electric specifications	Motor output/Size		100 W/□40			200 W/□60					
	Motor type		AC servo motor (200 VAC)			AC servo motor (200 VAC)					
	Encoder		Absolute 20-bit encoder (Resolution: 1048576 p/rev)								
	Power consumption [W]*6	Horizontal	45			65			65		
		Vertical	145			175			175		
	Standby power consumption when operating [W]*7	Horizontal	2			2			2		
		Vertical	8			8			8		
	Max. instantaneous power consumption [W]*8		445			724			724		
Lock unit specifications	Type*9		Non-magnetising lock			Non-magnetising lock					
	Holding force [N]		131	255	485	157	308	588	197	385	736
	Power consumption at 20 °C [W]*10		5.5			6			6		
	Rated voltage [V]		24 VDC $^{+10}_{0}$ %								

*1 This is the maximum value of the horizontal work load. An external guide is necessary to support the load. The actual work load changes according to the condition of the external guide. Confirm the load using the actual device.
*2 The force setting range (set values for the driver) for the force control with the torque control mode
Set it with reference to "Force Conversion Graph" on page 119.
*3 The allowable collision speed for collision with the workpiece with the torque control mode
*4 Impact resistance: No malfunction occurred when the actuator was tested with a drop tester in both an axial direction and a perpendicular direction to the lead screw. (The test was performed with the actuator in the initial state.)
Vibration resistance: No malfunction occurred in a test ranging between 45 to 2000 Hz. The test was performed in both an axial direction and a perpendicular direction to the lead screw. (The test was performed with the actuator in the initial state.)
*5 The work load conditions which require "Regenerative resistor" when operating at the maximum speed (Duty ratio: 100 %)
Order the regenerative resistor separately. For details, refer to "Conditions for Regenerative Resistor (Guide)" on page 118.
*6 The power consumption (including the driver) is for when the actuator is operating.
*7 The standby power consumption when operating (including the driver) is for when the actuator is stopped in the set position during operation.
*8 The maximum instantaneous power consumption (including the driver) is for when the actuator is operating.
*9 Only when motor option "With lock" is selected
*10 For an actuator with lock, add the power consumption for the lock.

Weight

Product Weight: Motor Top Mounting Type

[kg]

Series	LEYG25MV6							LEYG32MV7						
Stroke [mm]	30	50	100	150	200	250	300	30	50	100	150	200	250	300
Weight [kg]	1.7	1.9	2.2	2.6	3.0	3.3	3.6	3.1	3.4	4.0	4.7	5.3	5.7	6.2

Series	LEYG25LV6							LEYG32LV7						
Stroke [mm]	30	50	100	150	200	250	300	30	50	100	150	200	250	300
Weight [kg]	1.7	1.9	2.2	2.6	2.9	3.2	3.4	3.1	3.4	3.8	4.5	5.0	5.5	5.9

Product Weight: In-line Motor Type

[kg]

Series	LEYG25MDV6							LEYG32MDV7						
Stroke [mm]	30	50	100	150	200	250	300	30	50	100	150	200	250	300
Weight [kg]	1.7	1.9	2.2	2.6	3.0	3.3	3.6	3.2	3.4	4.0	4.7	5.3	5.8	6.2

Series	LEYG25LDV6							LEYG32LDV7						
Stroke [mm]	30	50	100	150	200	250	300	30	50	100	150	200	250	300
Weight [kg]	1.7	2.0	2.2	2.6	2.9	3.2	3.4	3.2	3.4	3.8	4.6	5.0	5.5	5.9

Additional Weight

[kg]

Size	25	32
Lock	0.3	0.6

Construction

Motor mounting position: Top mounting type

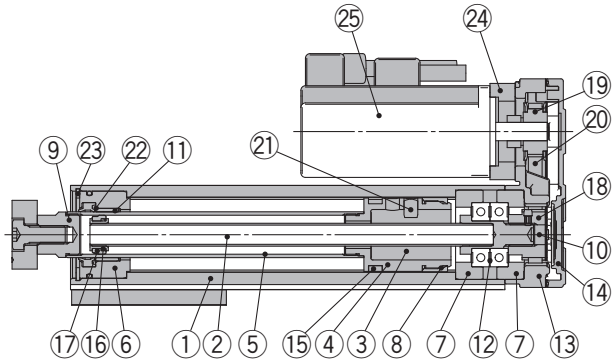

Motor mounting position: In-line type

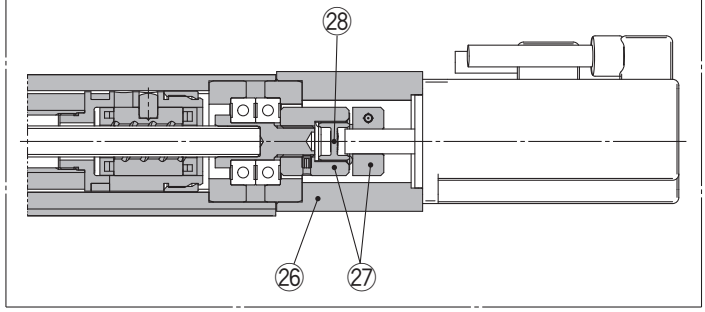

LEYG□M

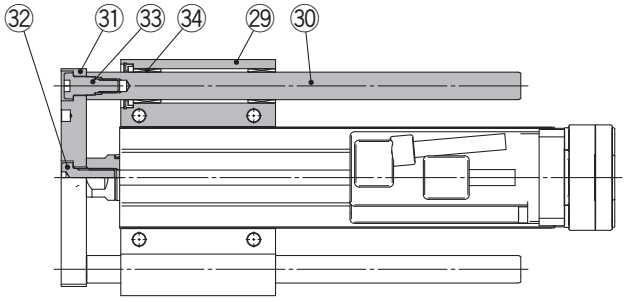

LEYG□L

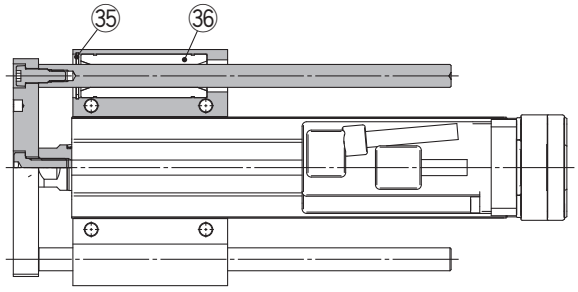

Component Parts

No.	Description	Material	Note
1	**Body**	Aluminium alloy	Anodised
2	**Ball screw shaft**	Alloy steel	
3	**Ball screw nut**	—	
4	**Piston**	Aluminium alloy	
5	**Piston rod**	Stainless steel	Hard chrome plating
6	**Rod cover**	Aluminium alloy	
7	**Bearing holder**	Aluminium alloy	
8	**Rotation stopper**	POM	
9	**Socket**	Free cutting carbon steel	Nickel plating
10	**Connected shaft**	Free cutting carbon steel	Nickel plating
11	**Bushing**	Bearing alloy	
12	**Bearing**	—	
13	**Return box**	Aluminium die-cast	Coating
14	**Return plate**	Aluminium die-cast	Coating
15	**Magnet**	—	
16	**Wear ring holder**	Stainless steel	Stroke 101 mm or more
17	**Wear ring**	POM	Stroke 101 mm or more
18	**Screw shaft pulley**	Aluminium alloy	

No.	Description	Material	Note
19	**Motor pulley**	Aluminium alloy	
20	**Belt**	—	
21	**Parallel pin**	Stainless steel	
22	**Seal**	NBR	
23	**Retaining ring**	Steel for spring	Phosphate coated
24	**Motor adapter**	Aluminium alloy	Coating
25	**Motor**	—	
26	**Motor block**	Aluminium alloy	Coating
27	**Hub**	Aluminium alloy	
28	**Spider**	Urethane	
29	**Guide attachment**	Aluminium alloy	Anodised
30	**Guide rod**	Carbon steel	
31	**Plate**	Aluminium alloy	Anodised
32	**Plate mounting cap screw**	Carbon steel	Nickel plating
33	**Guide cap screw**	Carbon steel	Nickel plating
34	**Sliding bearing**	Bearing alloy	
35	**Retaining ring**	Steel for spring	Phosphate coated
36	**Ball bushing**	—	

Support Block

Size	Order no.
25	LEYG-S025
32	LEYG-S032

* Two body mounting screws are included with the support block.

Replacement Parts/Belt

Size	Order no.
25	LE-D-2-2
32	LE-D-2-4

Dimensions: Motor Top Mounting

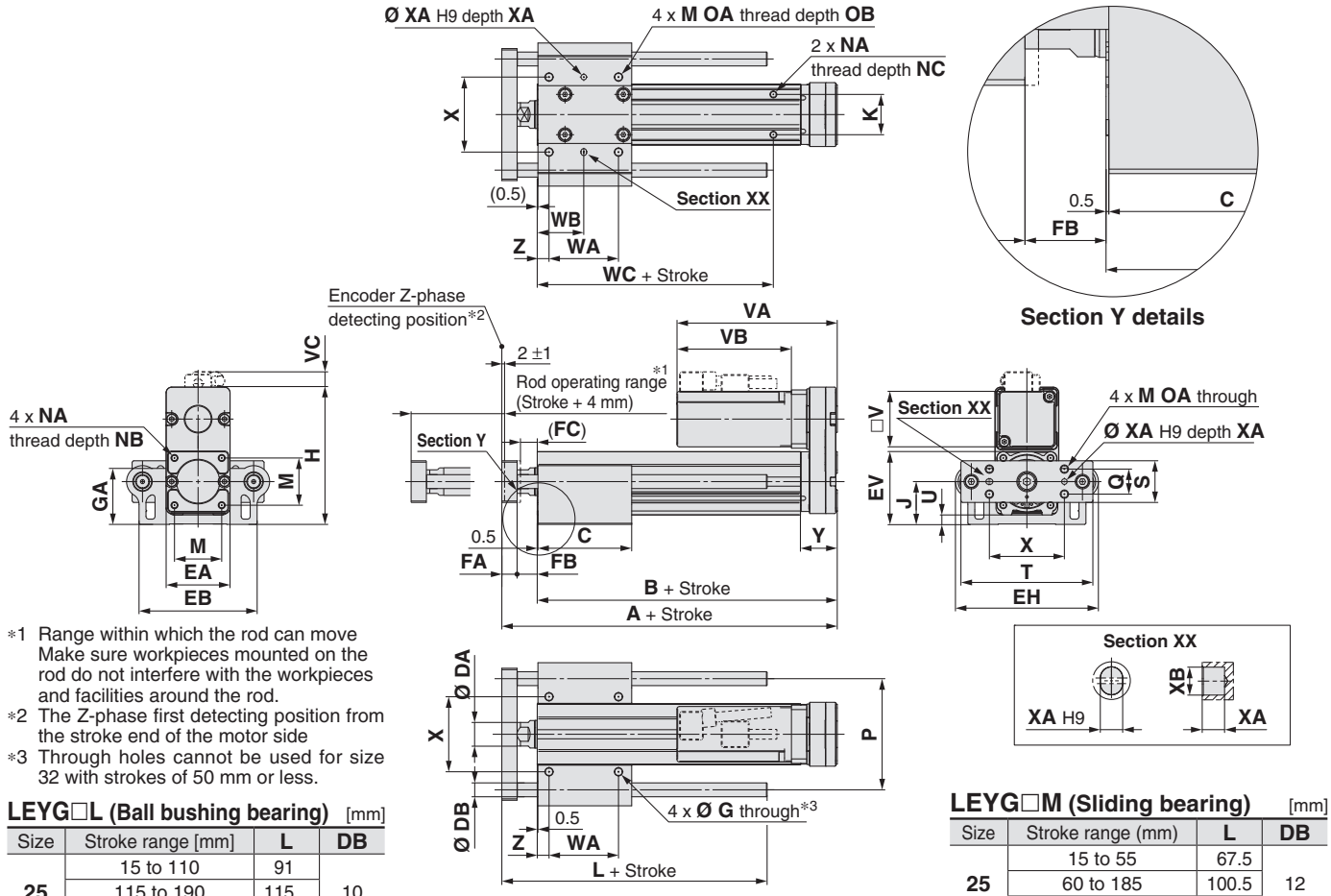

*1 Range within which the rod can move
Make sure workpieces mounted on the rod do not interfere with the workpieces and facilities around the rod.
*2 The Z-phase first detecting position from the stroke end of the motor side
*3 Through holes cannot be used for size 32 with strokes of 50 mm or less.

LEYG□L (Ball bushing bearing) [mm]

Size	Stroke range [mm]	L	DB
25	15 to 110	91	10
	115 to 190	115	
	195 to 300	133	
32	20 to 110	97.5	13
	115 to 190	116.5	
	195 to 300	134	

LEYG□M (Sliding bearing) [mm]

Size	Stroke range (mm)	L	DB
25	15 to 55	67.5	12
	60 to 185	100.5	
	190 to 300	138	
32	20 to 55	74	16
	60 to 185	107	
	190 to 300	144	

LEYG□M, LEYG□L Common [mm]

Size	Stroke range [mm]	A	B	C	DA	EA	EB	EH	EV	FA	FB	FC	G	GA	H	J	K	M	NA	NB	NC
25	15 to 35	141.5	116	50	20	46	85	103	52.3	11	14.5	12.5	5.4	40.3	98.8	30.8	29	34	M5 x 0.8	8	6.5
	40 to 100			67.5																	
	105 to 120	166.5	141																		
	125 to 200			84.5																	
	205 to 300			102																	
32	20 to 35	160.5	130	55	25	60	101	123	63.8	12	18.5	16.5	5.4	50.3	125.3	38.3	30	40	M6 x 1.0	10	8.5
	40 to 100			68																	
	105 to 120	190.5	160																		
	125 to 200			85																	
	205 to 300			102																	

Size	Stroke range [mm]	OA	OB	P	Q	S	T	U	V	WA	WB	WC	X	XA	XB	Y	Z
25	15 to 35	M6 x 1.0	12	80	18	30	95	6.8	40	35	26	70	54	4	5	26.5	8.5
	40 to 100									50	33.5						
	105 to 120											95					
	125 to 200									70	43.5						
	205 to 300									85	51						
32	20 to 35	M6 x 1.0	12	95	28	40	117	7.3	60	40	28.5	75	64	5	6	34	8.5
	40 to 100									50	33.5						
	105 to 120											105					
	125 to 200									70	43.5						
	205 to 300									85	51						

Size	Without lock			With lock		
	VA	VB	VC	VA	VB	VC
25	115.5	82.5	11	160.5	127.5	11
32	120	80	14	160	120	14

Dimensions: In-line Motor

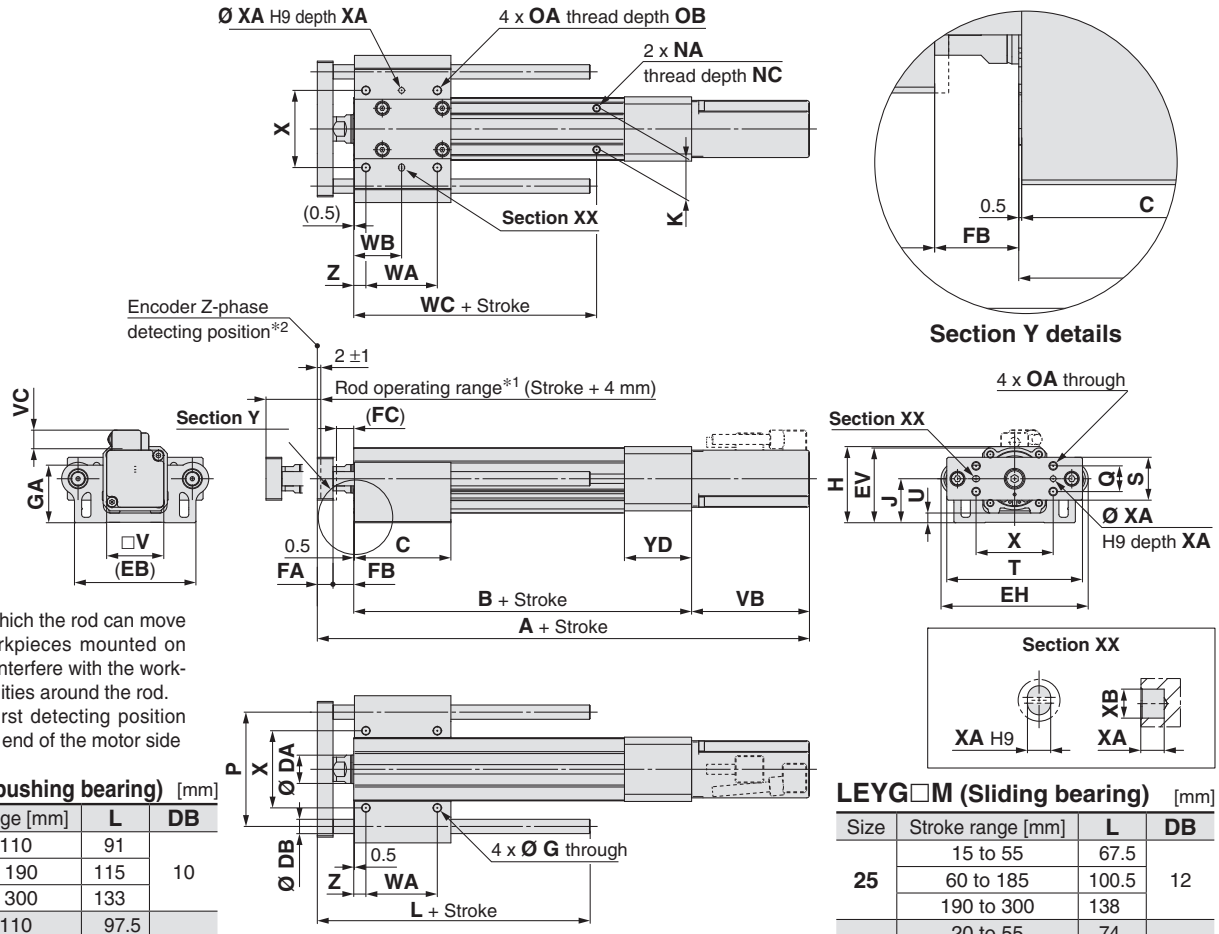

∗1 Range within which the rod can move Make sure workpieces mounted on the rod do not interfere with the work-pieces and facilities around the rod.
∗2 The Z-phase first detecting position from the stroke end of the motor side

LEYG□L (Ball bushing bearing) [mm]

Size	Stroke range [mm]	L	DB
25	15 to 110	91	10
	115 to 190	115	
	195 to 300	133	
32	20 to 110	97.5	13
	115 to 190	116.5	
	195 to 300	134	

LEYG□M (Sliding bearing) [mm]

Size	Stroke range [mm]	L	DB
25	15 to 55	67.5	12
	60 to 185	100.5	
	190 to 300	138	
32	20 to 55	74	16
	60 to 185	107	
	190 to 300	144	

LEYG□M, LEYG□L Common [mm]

Size	Stroke range [mm]	B	C	DA	EB	EH	EV	FA	FB	FC	G	GA	H	J	K	NA	NC
25	15 to 35	136.5	50	20	85	103	52.3	11	14.5	12.5	5.4	40.3	53.3	30.8	29	M5 x 0.8	6.5
	40 to 100		67.5														
	105 to 120	161.5															
	125 to 200		84.5														
	205 to 300		102														
32	20 to 35	156	55	25	101	123	63.8	12	18.5	16.5	5.4	50.3	68.3	38.3	30	M6 x 1.0	8.5
	40 to 100		68														
	105 to 120	186															
	125 to 200		85														
	205 to 300		102														

Size	Stroke range [mm]	OA	OB	P	Q	S	T	U	V	WA	WB	WC	X	XA	XB	YD	Z
25	15 to 35	M6 x 1.0	12	80	18	30	95	6.8	40	35	26	70	54	4	5	47	8.5
	40 to 100									50	33.5						
	105 to 120											95					
	125 to 200									70	43.5						
	205 to 300									85	51						
32	20 to 35	M6 x 1.0	12	95	28	40	117	7.3	60	40	28.5	75	64	5	6	60	8.5
	40 to 100									50	33.5						
	105 to 120											105					
	125 to 200									70	43.5						
	205 to 300									85	51						

Size	Stroke range [mm]	Without lock			With lock		
		A	VB	VC	A	VB	VC
25	15 to 100	255.5	82.5	11.5	300.5	127.5	11.5
	105 to 300	280.5			325.5		
32	15 to 100	266.5	80	14	306.5	120	14
	105 to 300	296.5			336.5		

Support Block

●Guide for support block application

When the stroke exceeds 100 mm and the mounting orientation is horizontal, the body will be bent. Mounting the support block is recommended. (Please order it separately from the models shown below.)

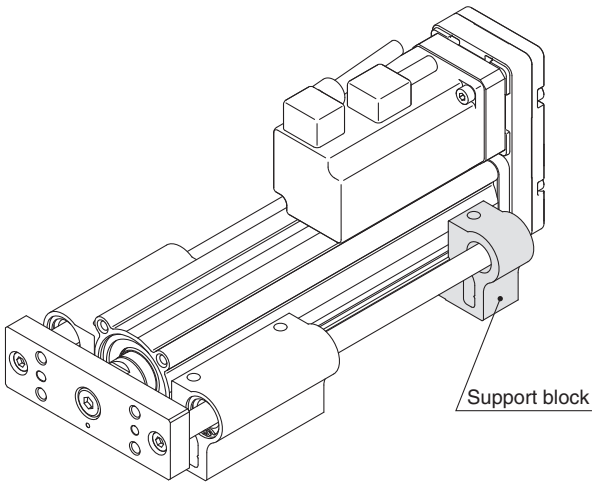

Support Block Model

LEYG-S025

●**Size**

025	For size 25
032	For size 32

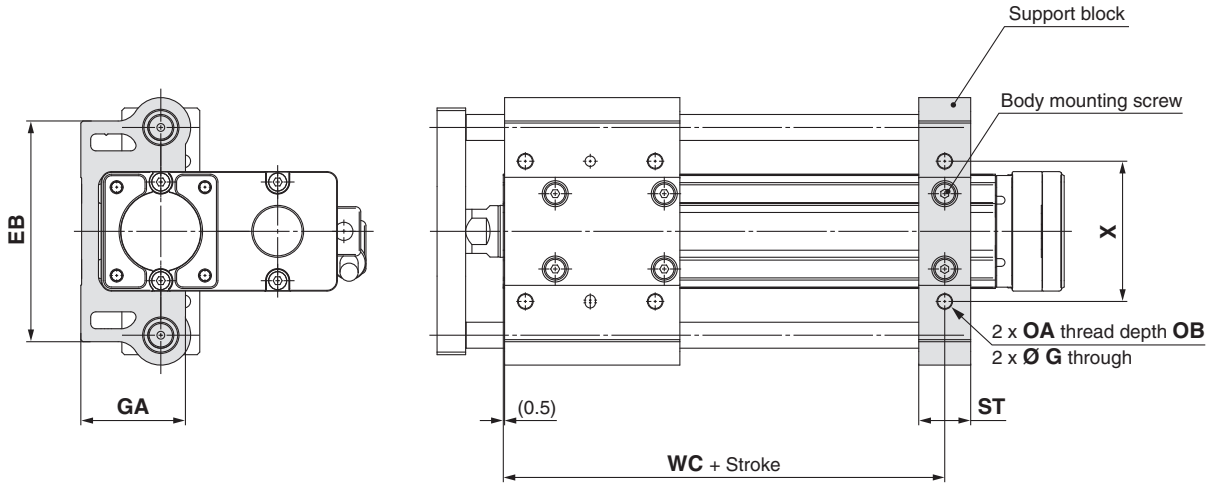

⚠Caution

Do not install the body using only a support block.
The support block should be used only for support.

[mm]

Size	Model	Stroke range	EB	G	GA	OA	OB	ST	WC	X
25	**LEYG-S025**	15 to 100	85	5.4	40.3	M6 x 1.0	12	20	70	54
		105 to 300							95	
32	**LEYG-S032**	20 to 100	101	5.4	50.3	M6 x 1.0	12	22	75	64
		105 to 300							105	

∗ Two body mounting screws are included with the support block.
∗ The through holes of the LEYG-S032 cannot be used for the motor top mounting type. Use taps on the bottom.

Environment

Dust-tight/Water-jet-proof (IP65 Equivalent)

- **Enclosure: IP65 equivalent**[*1]
- **Max. stroke: 500 mm**[*2]

*2 For size 32

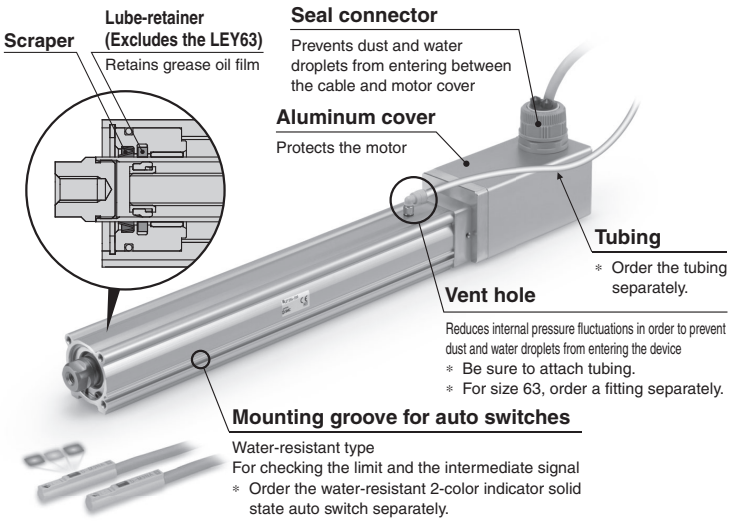

*1 IP65 enclosure: The protection structure against solid foreign objects is dust-tight type and the protection structure against water is water-jet-proof type.
Dust-tight means that no dust can enter the inside of the equipment.
Water-jet-proof means that the product is not adversely affected by direct water jets from any direction. That is, even when direct water jets are applied to the product for 3 minutes by means of the pre-determined method, there is no water entry that hinders the correct operation inside the equipment. Be sure to take appropriate protective measures if the product is to be used in an environment where it will be constantly exposed to water or fluids other than water splash. In particular, the product cannot be used in environments where oils, such as cutting oil or cutting fluid, are present.

LEY-X5 (Made to Order)

Size 25, 32

Step Motor (Servo/24 VDC)
Servo Motor (24 VDC) Type
p. 155

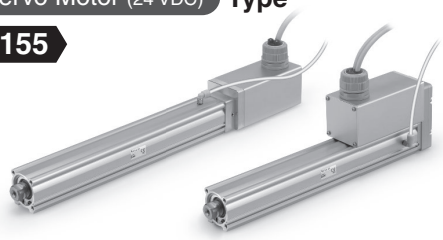

AC Servo Motor (100/200 W) Type
p. 163, 169

LEY63□□□-□P

Size 63

AC Servo Motor (400 W) Type p. 79

* Option

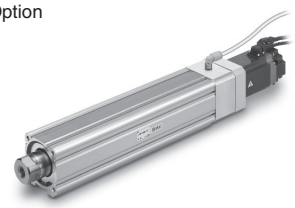

Secondary Battery Compatible

- **Copper (Cu) and zinc (Zn) free**[*1]

*1 Excludes motors, cables, controllers/drivers

- **Compatible with dew points as low as −70 °C**

Uses grease compatible with low dew points

Rod Type/25A-LEY

Step Motor (Servo/24 VDC) Servo Motor (24 VDC) Type
p. 177

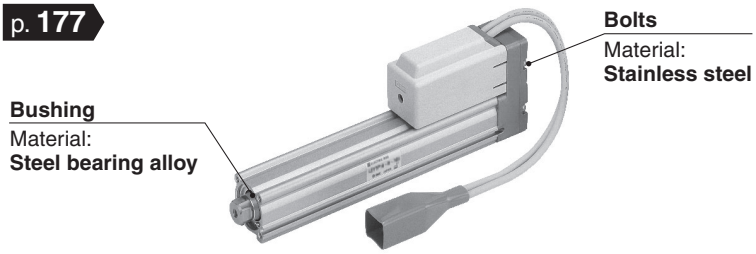

Motor type	Size 16	25	32	40
Step motor (Servo/24 VDC)	●	●	●	●
Servo motor (24 VDC)	●	●	●	●

AC Servo Motor Type p. 181, 183

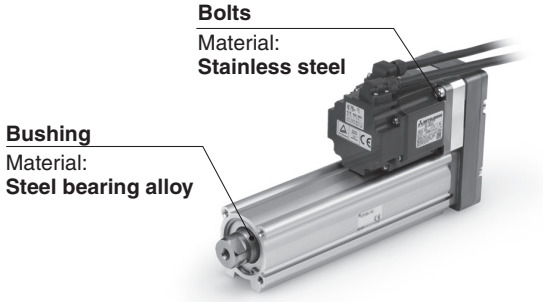

Motor type	Size 25	32
AC servo motor	●	●

* Copper and zinc materials are used for the motors, cables, controllers/drivers.

Model Selection

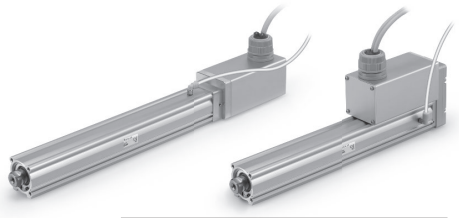

LEY-X5 Series ▶ p. 155

Refer to page 108 for the LECPA, JXC□$^{2}_{3}$ and page 109 for the LECA6.

Speed–Work Load Graph (Guide) for Step Motor (Servo/24 VDC) LECP1, JXC□1

Horizontal

LEY25□-X5 ▨ for acceleration/deceleration: 2000 mm/s²

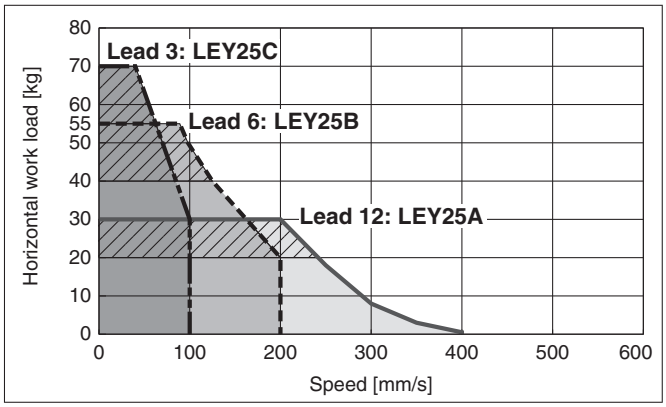

LEY32□-X5 ▨ for acceleration/deceleration: 2000 mm/s²

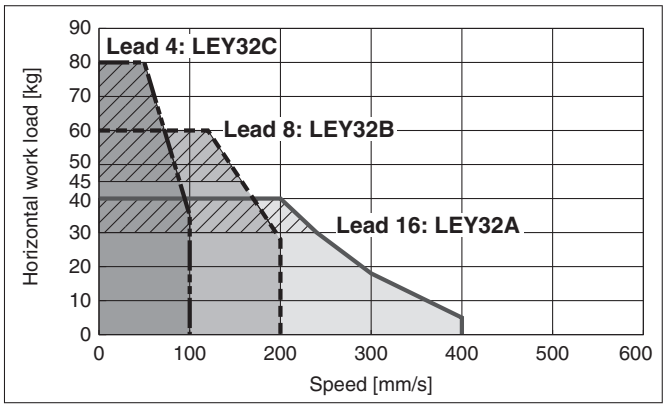

Vertical

LEY25□-X5

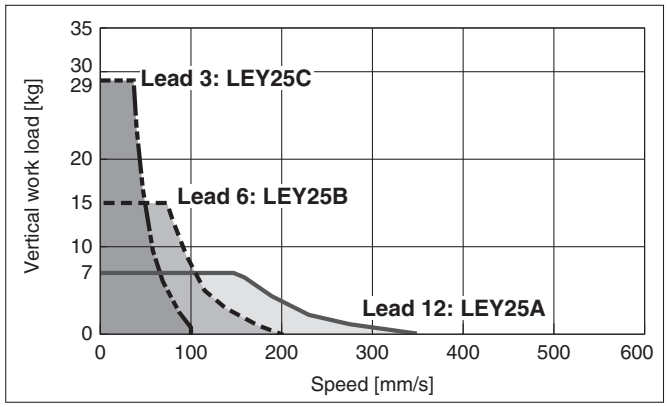

LEY32□-X5

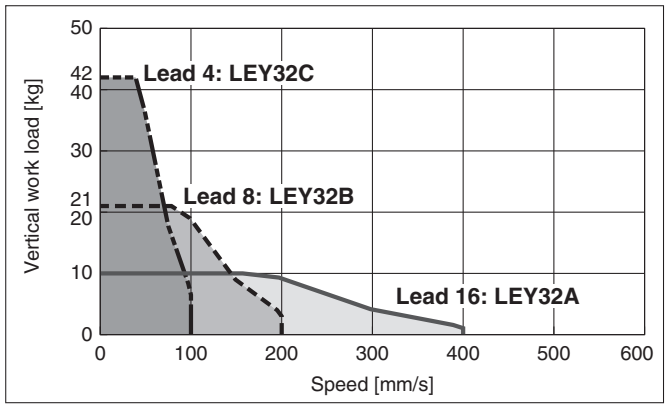

Graph of Allowable Lateral Load on the Rod End (Guide)

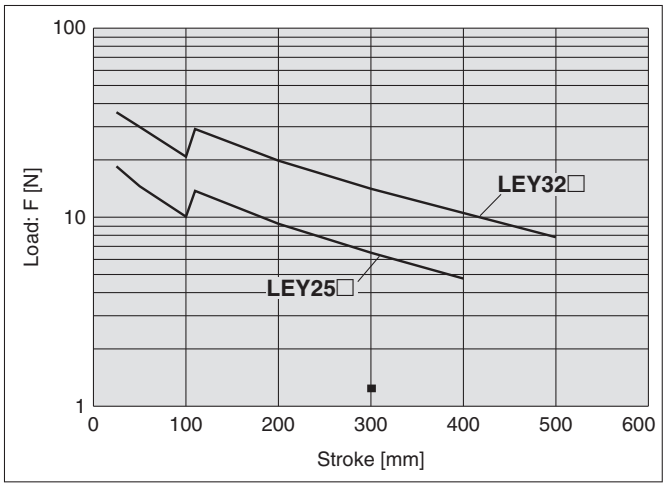

[Stroke] = [Product stroke] + [Distance from the rod end to the centre of gravity of the workpiece]

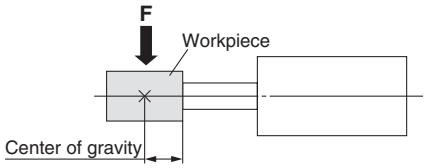

Rod Displacement: δ [mm]

Size \ Stroke	30	50	100	150	200	250	300	350	400	450	500
25	±0.3	±0.4	±0.7	±0.7	±0.9	±1.1	±1.3	±1.5	±1.7	—	—
32	±0.3	±0.4	±0.7	±0.6	±0.8	±1.0	±1.1	±1.3	±1.5	±1.7	±1.8

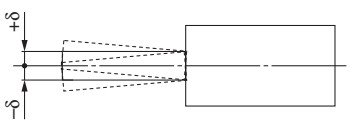

Refer to page 107 for the LECP1, JXC□1 and page 109 for the LECA6.

Speed–Work Load Graph (Guide)
For Step Motor (Servo/24 VDC) LECPA, JXC□$^{2}_{3}$

Horizontal

LEY25□-X5

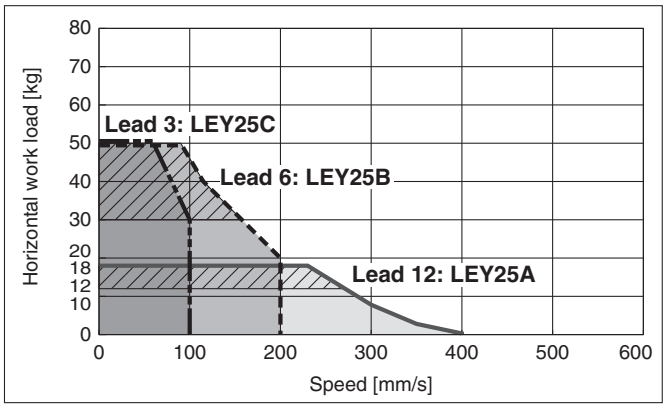

LEY32□-X5

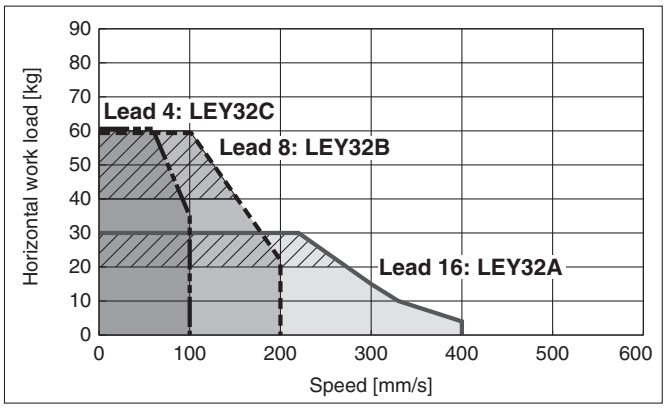

Vertical

LEY25□-X5

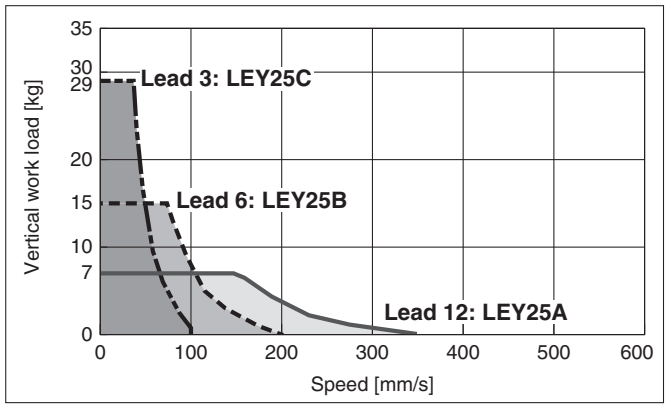

LEY32□-X5

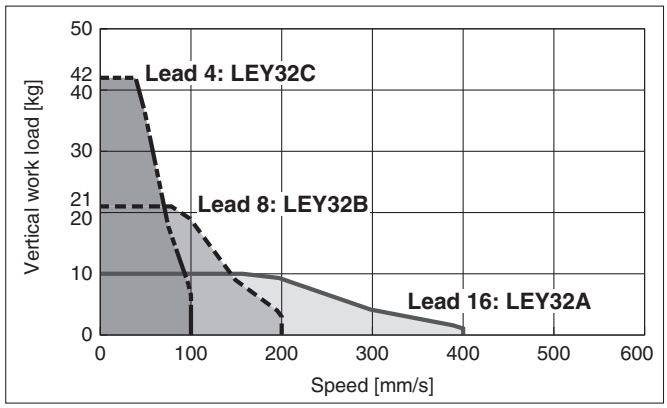

For Servo Motor (24 VDC) LECA6

Horizontal

LEY25□A-X5

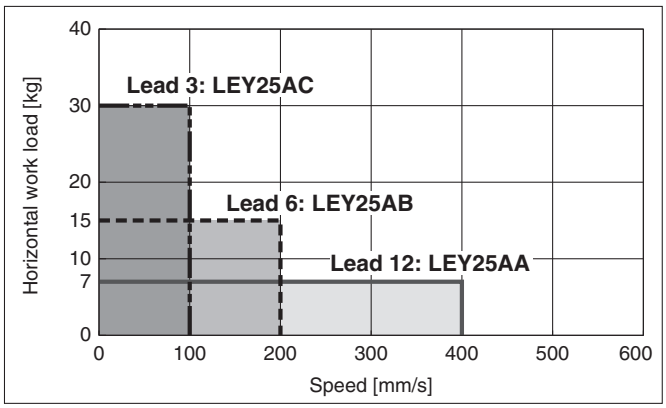

Vertical

LEY25□A-X5

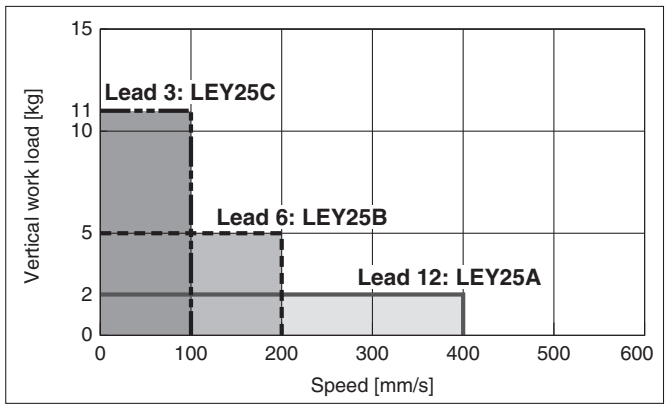

Force Conversion Graph

Step Motor (Servo/24 VDC)

LEY25□-X5

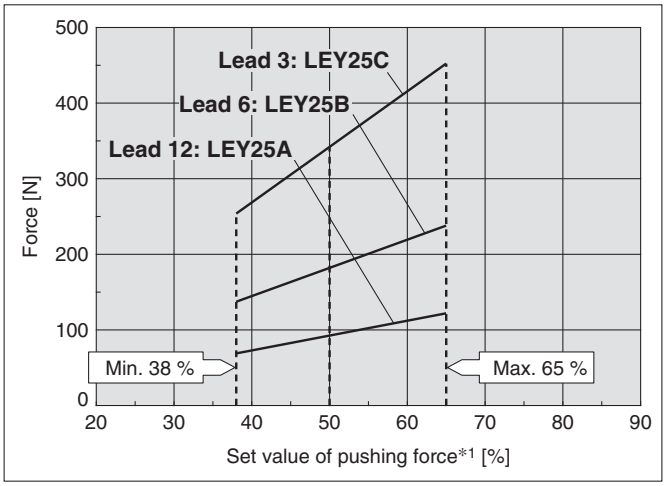

Ambient temperature	Set value of pushing force*1 [%]	Duty ratio [%]	Continuous pushing time [minute]
40 °C or less	65 or less	100	—

LEY32□-X5

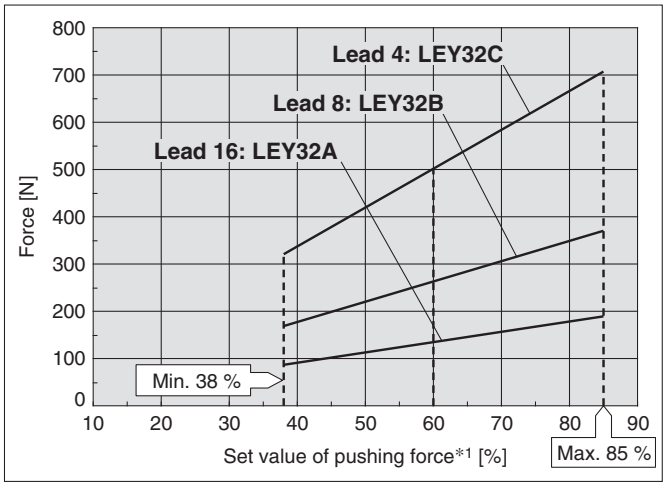

Ambient temperature	Set value of pushing force*1 [%]	Duty ratio [%]	Continuous pushing time [minute]
25 °C or less	85 or less	100	—
40 °C	65 or less	100	—
	85	50	15

Servo Motor (24 VDC)

LEY25□A-X5

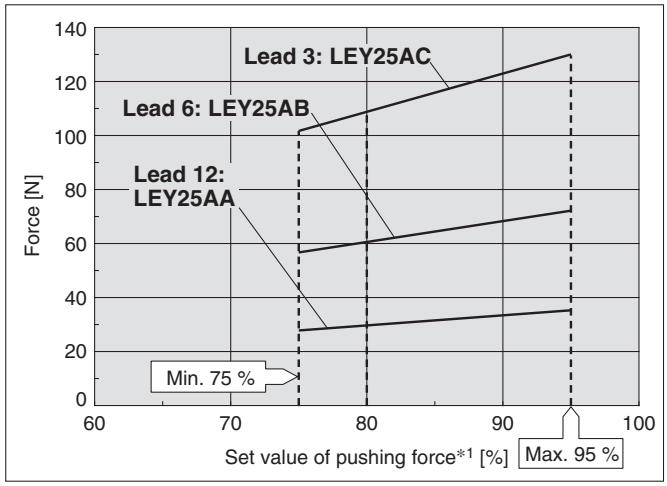

Ambient temperature	Set value of pushing force*1 [%]	Duty ratio [%]	Continuous pushing time [minute]
40 °C or less	95 or less	100	—

<Limit Values for Pushing Force and Trigger Level in Relation to Pushing Speed>
Without Load

Model	Lead	Pushing speed [mm/s]	Pushing force (Setting input value)
LEY25	A/B/C	21 to 35	50 to 65 %
LEY32	A	24 to 30	60 to 85 %
	B/C	21 to 30	

Model	Lead	Pushing speed [mm/s]	Pushing force (Setting input value)
LEY25□A	A/B/C	21 to 35	80 to 95 %

There is a limit to the pushing force in relation to the pushing speed. If the product is operated outside of the range (low pushing force), the completion signal [INP] may be output before the pushing operation has been completed (during the moving operation).
If operating with the pushing speed below the min. speed, please check for operating problems before using the product.

<Set Values for Vertical Upward Transfer Pushing Operations>

For vertical loads (upward), set the pushing force to the max. value shown below and operate at the work load or less.

Model	LEY25□			LEY32□			LEY25□A		
Lead	**A**	**B**	**C**	**A**	**B**	**C**	**A**	**B**	**C**
Work load [kg]	2.5	5	10	4.5	9	18	1.2	2.5	5
Pushing force	65 %			85 %			95 %		

*1 Set values for the controller

Non-rotating Accuracy of Rod

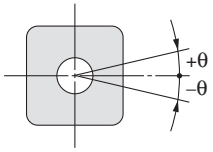

Size	Non-rotating accuracy θ
25	±0.8°
32	±0.7°

* Avoid using the electric actuator in such a way that rotational torque would be applied to the piston rod.
This may cause the deformation of the non-rotating guide, abnormal auto switch responses, play in the internal guide, or an increase in the sliding resistance.

Step Motor (Servo/24 VDC) Servo Motor (24 VDC)

Electric Actuator/ Rod Type

Dust-tight/Water-jet-proof (IP65 Equivalent)

LEY-X5 (Made to Order) *Series* LEY25, 32

(Only applicable to the JXC□)

Refer to page 151 for model selection.

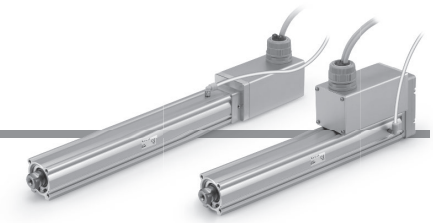

How to Order

LEY 25 D □ B – 50 □ □ □ – R1 – X5

❶ ❷ ❸ ❹ ❺ ❻ ❼ ❽ ❾

LEC□ Series 6P ❿ *JXC□ Series* CD17T ⓫ ⓬

For details on controllers, refer to page 156.

● Made to order: Dust-tight/ Water-jet-proof

❶ Size

25
32

❷ Motor mounting position

—	Top mounting
D	In-line

❸ Motor type

Symbol	Type	Size 25	Size 32	Compatible controller/driver
—	Step motor (Servo/24 VDC)	●	●	LECP1, LECPA, JXCE1, JXC91, JXCP1, JXCD1, JXCL1
A	Servo motor (24 VDC)	●	—	LECA6

❹ Lead [mm]

Symbol	LEY25	LEY32
A	12	16
B	6	8
C	3	4

❺ Stroke [mm]

30	30
to	to
500	500

∗ For details, refer to the applicable stroke table below.

❻ Motor option∗2

—	Without option
B	With lock

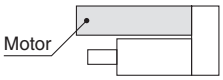

❼ Rod end thread

—	Rod end female thread
M	Rod end male thread (1 rod end nut is included.)

❽ Mounting∗3

Symbol	Type	Motor mounting position: Top mounting	Motor mounting position: In-line
—	Ends tapped/Body bottom tapped∗4	●	●
L	Foot	●	—
F	Rod flange∗4	●∗5	●
G	Head flange∗4	●∗6	—

❾ Actuator cable type/length

Robotic cable [m]

R1	1.5	RA	10∗7
R3	3	RB	15∗7
R5	5	RC	20∗7
R8	8∗7		

Applicable Stroke Table∗1

●: Standard

Model \ Stroke [mm]	30	50	100	150	200	250	300	350	400	450	500	Manufacturable stroke range
LEY25	●	●	●	●	●	●	●	●	●	—	—	15 to 400
LEY32	●	●	●	●	●	●	●	●	●	●	●	20 to 500

∗ For auto switches, refer to page 176.
∗ "-X5" is not added to an actuator model with a controller/driver part number suffix.
Example) "LEY25DB-100" for the LEY25DB-100BMU-R16N1D-X5

SMC

LEC□ Series (For details, refer to page 157.)

6P 1 □
⑩ ⑪ ⑫

⑩ Controller/Driver type*8

—	Without controller/driver	
6N	**LECA6** (Step data input type)	NPN
6P		PNP
1N	**LECP1***9 (Programless type)	NPN
1P		PNP
AN	**LECPA***9 *11 (Pulse input type)	NPN
AP		PNP

⑪ I/O cable length*12, Communication plug

—	Without cable
1	1.5 m
3	3 m*13
5	5 m*13
S	Straight type communication plug connector
T	T-branch type communication plug connector

⑫ Controller/Driver mounting

—	Screw mounting
D	DIN rail*14

JXC□ Series (For details, refer to page 157.)

⑩ Controller

—	Without controller
C□1□□	With controller

C D 1 7 T

Communication protocol

E	EtherCAT®
9	EtherNet/IP™
P	PROFINET
D	DeviceNet™
L	IO-Link

For single axis

Mounting

7	Screw mounting
8*14	DIN rail

Communication plug connector for DeviceNet™*15

—	Without plug connector
S	Straight type
T	T-branch type

*1 Please consult with SMC for non-standard strokes as they are produced as special orders.
*2 When "With lock" is selected for the top mounting type, the motor body will stick out from the end of the body for strokes of 5 0 mm or less. Check for interference with workpieces before selecting a model.
*3 The mounting bracket is shipped together with the product but does not come assembled.
*4 For the horizontal cantilever mounting of the rod flange, head flange, or ends tapped types, use the actuator within the following stroke range.
·LEY25: 200 mm or less ·LEY32: 100 mm or less
*5 The rod flange type is not available for the LEY25/32 with strokes of 50 mm or less and motor option "With lock."
*6 The head flange type is not available for the LEY32.
*7 Produced upon receipt of order (Robotic cable only)
*8 For details on controllers/drivers and compatible motors, refer to the compatible controller/driver on the next page.
*9 Only available for the motor type "Step motor"
*10 Not compliant with CE
*11 When pulse signals are open collector, order the current limiting resistor (LEC-PA-R-□) on page 220 separately.
*12 When "Without controller/driver" is selected for controller/driver types, I/O cable cannot be selected. Refer to page 199 (For LECA6), page 213 (For LECP1), or page 220 (For LECPA) if I/O cable is required.
*13 When "Pulse input type" is selected for controller/driver types, pulse input usable only with differential. Only 1.5 m cables usable with open collector
*14 The DIN rail is not included. Order it separately.
*15 Select "—" for anything other than DeviceNet™.

⚠Caution

[CE-compliant products]

① EMC compliance was tested by combining the electric actuator LEY series and the controller LEC/JXC series.
The EMC depends on the configuration of the customer's control panel and the relationship with other electrical equipment and wiring. Therefore, compliance with the EMC directive cannot be certified for SMC components incorporated into the customer's equipment under actual operating conditions. As a result, it is necessary for the customer to verify compliance with the EMC directive for the machinery and equipment as a whole.

② For the servo motor (24 VDC) specification, EMC compliance was tested by installing a noise filter set (LEC-NFA). Refer to page 199 for the noise filter set. Refer to the LECA series Operation Manual for installation.

[UL-compliant products (For the LEC series)]

When compliance with UL is required, the electric actuator and controller/driver should be used with a UL1310 Class 2 power supply.

The actuator and controller/driver are sold as a package.

Confirm that the combination of the controller/driver and actuator is correct.

<Check the following before use.>

① Check the actuator label for the model number. This number should match that of the controller/driver.

② Check that the Parallel I/O configuration matches (NPN or PNP).

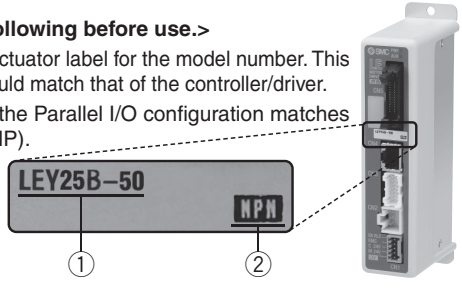

* Refer to the Operation Manual for using the products. Please download it via our website, https://www.smc.eu

Compatible Controller/Driver

LEC□ Series

Type	Step data input type	Programless type	Pulse input type
Series	**LECA6**	**LECP1**	**LECPA**
Features	Value (Step data) input Standard controller	Capable of setting up operation (step data) without using a PC or teaching box	Operation by pulse signals
Compatible motor	Servo motor (24 VDC)	Servo motor (Servo/24 VDC)	
Max. number of step data	64 points	14 points	—
Power supply voltage			
Reference page	191	207	214

JXC□ Series

Type	EtherCAT® direct input type	EtherNet/IP™ direct input type	PROFINET direct input type	DeviceNet™ direct input type	IO-Link direct input type
Series	**JXCE1**	**JXC91**	**JXCP1**	**JXCD1**	**JXCL1**
Features	EtherCAT® direct input	EtherNet/IP™ direct input	PROFINET direct input	DeviceNet™ direct input	IO-Link direct input
Compatible motor	Step motor (Servo/24 VDC)				
Max. number of step data	64 points				
Power supply voltage	24 VDC				
Reference page	224				

Specifications

Step Motor (Servo/24 VDC)

Model					LEY25□-X5			LEY32□-X5		
Actuator specifications	Work load [kg]*1	Horizontal	For LECP1 JXC□1	(3000 [mm/s²])	20	40	60	30	45	60
				(2000 [mm/s²])	30	60	70	40	60	80
			For LECPA JXC□2/3	(3000 [mm/s²])	12	30	30	20	40	40
				(2000 [mm/s²])	18	50	50	30	60	60
		Vertical*14		(3000 [mm/s²])	7	15	29	10	21	42
	Pushing force [N]*2 *3 *4				63 to 122	126 to 238	232 to 452	80 to 189	156 to 370	296 to 707
	Speed [mm/s]*4				18 to 400	9 to 200	5 to 100	24 to 400	12 to 200	6 to 100
	Max. acceleration/deceleration [mm/s²]				3000					
	Pushing speed [mm/s]*5				35 or less			30 or less		
	Positioning repeatability [mm]				±0.02					
	Lost motion [mm]*6				0.1 or less					
	Screw lead [mm]				12	6	3	16	8	4
	Impact/Vibration resistance [m/s²]*7				50/20					
	Actuation type				Ball screw + Belt (LEY□) Ball screw (LEY□D)					
	Guide type				Sliding bushing (Piston rod)					
	Enclosure*8				IP65 equivalent					
	Operating temperature range [°C]				5 to 40					
	Operating humidity range [%RH]				90 or less (No condensation)					
Electric specifications	Motor size				□42			□56.4		
	Motor type				Step motor (Servo/24 VDC)					
	Encoder				Incremental A/B phase (800 pulse/rotation)					
	Rated voltage [V]				24 VDC ±10 %					
	Power consumption [W]*9				40			50		
	Standby power consumption when operating [W]*10				15			48		
	Max. instantaneous power consumption [W]*11				48			104		
Lock unit specifications	Type*12				Non-magnetising lock					
	Holding force [N]				78	157	294	108	216	421
	Power consumption [W]*13				5			5		
	Rated voltage [V]				24 VDC ±10 %					

*1 Horizontal: The maximum value of the work load. An external guide is necessary to support the load. (Friction coefficient of guide: 0.1 or less) The actual work load and transfer speed change according to the condition of the external guide. Also, speed changes according to the work load. Check "Model Selection" on pages 151 and 152.
Vertical: Speed changes according to the work load. Check "Model Selection" on pages 151 and 152.
The values shown in ( ) are the acceleration/deceleration. Set these values to be 3000 [mm/s²] or less.
*2 Pushing force accuracy is ±20 % (F.S.).
*3 The thrust setting values for LEY25□ is 38 % to 65 % and for LEY32□ is 38 % to 85 %. The pushing force values change according to the duty ratio and pushing speed. Check "Model Selection" on page 153.
*4 The speed and force may change depending on the cable length, load, and mounting conditions. Furthermore, if the cable length exceeds 5 m, then it will decrease by up to 10 % for each 5 m. (At 15 m: Reduced by up to 20 %)
*5 The allowable speed for pushing operation. When push conveying a workpiece, operate at the vertical work load or less.
*6 A reference value for correcting an error in reciprocal operation
*7 Impact resistance: No malfunction occurred when the actuator was tested with a drop tester in both an axial direction and a perpendicular direction to the lead screw. (The test was performed with the actuator in the initial state.)
Vibration resistance: No malfunction occurred in a test ranging between 45 to 2000 Hz. The test was performed in both an axial direction and a perpendicular direction to the lead screw. (The test was performed with the actuator in the initial state.)
*8 Cannot be used in an environment where oil such as cutting oil splashes or it is constantly exposed to water
Take appropriate protective measures. For details on enclosure, refer to "Enclosure" on page 188.
*9 The power consumption (including the controller) is for when the actuator is operating.
*10 The standby power consumption when operating (including the controller) is for when the actuator is stopped in the set position during the operation. Except during the pushing operation
*11 The maximum instantaneous power consumption (including the controller) is for when the actuator is operating. This value can be used for the selection of the power supply.
*12 With lock only
*13 For an actuator with lock, add the power consumption for the lock.
*14 When mounting vertically and using the product facing upwards in an environment where water is present, take necessary measures to prevent water from splashing on the rod cover, because water will accumulate on the rod seal due to the structure of the product.

Specifications

Servo Motor (24 VDC)

	Model			LEY25□A-X5		
Actuator specifications	Work load [kg]*1	Horizontal	(3000 [mm/s²])	7	15	30
		Vertical*13	(3000 [mm/s²])	2	5	11
	Pushing force [N]*2 *3			18 to 35	37 to 72	66 to 130
	Speed [mm/s]			2 to 400	1 to 200	1 to 100
	Max. acceleration/deceleration [mm/s²]			3000		
	Pushing speed [mm/s]*4			35 or less		
	Positioning repeatability [mm]			±0.02		
	Lost motion [mm]*5			0.1 or less		
	Screw lead [mm]			12	6	3
	Impact/Vibration resistance [m/s²]*6			50/20		
	Actuation type			Ball screw + Belt (LEY□) Ball screw (LEY□D)		
	Guide type			Sliding bushing (Piston rod)		
	Enclosure*7			IP65 equivalent		
	Operating temperature range [°C]			5 to 40		
	Operating humidity range [%RH]			90 or less (No condensation)		
Electric specifications	Motor size			□42		
	Motor type			Servo motor (24 VDC)		
	Encoder			Incremental A/B phase (800 pulse/rotation)/Z-phase		
	Rated voltage [V]			24 VDC ±10 %		
	Power consumption [W]*8			86		
	Standby power consumption when operating [W]*9			4 (Horizontal)/12 (Vertical)		
	Max. instantaneous power consumption [W]*10			96		
Lock unit specifications	Type*11			Non-magnetising lock		
	Holding force [N]			78	157	294
	Power consumption [W]*12			5		
	Rated voltage [V]			24 VDC ±10 %		

*1 Horizontal: The maximum value of the work load. An external guide is necessary to support the load. (Friction coefficient of guide: 0.1 or less) The actual work load and transfer speed change according to the condition of the external guide. Vertical: Speed changes according to the work load. Check "Model Selection" on page 152. The values shown in ( ) are the acceleration/deceleration.
Set these values to be 3000 [mm/s²] or less.

*2 Pushing force accuracy is ±20 % (F.S.).

*3 The thrust setting values for LEY25A□ is 75 % to 95 %. The pushing force values change according to the duty ratio and pushing speed. Check "Model Selection" on page 153.

*4 The allowable speed for pushing operation
When push conveying a workpiece, operate at the vertical work load or less.

*5 A reference value for correcting an error in reciprocal operation

*6 Impact resistance: No malfunction occurred when the actuator was tested with a drop tester in both an axial direction and a perpendicular direction to the lead screw. (The test was performed with the actuator in the initial state.)
Vibration resistance: No malfunction occurred in a test ranging between 45 to 2000 Hz. The test was performed in both an axial direction and a perpendicular direction to the lead screw. (The test was performed with the actuator in the initial state.)

*7 Cannot be used in an environment where oil such as cutting oil splashes or it is constantly exposed to water
Take appropriate protective measures. For details on enclosure, refer to "Enclosure" on page 188.

*8 The power consumption (including the controller) is for when the actuator is operating.

*9 The standby power consumption when operating (including the controller) is for when the actuator is stopped in the set position during the operation with the maximum work load. Except during the pushing operation

*10 The maximum instantaneous power consumption (including the controller) is for when the actuator is operating. This value can be used for the selection of the power supply.

*11 With lock only

*12 For an actuator with lock, add the power consumption for the lock.

*13 When mounting vertically and using the product facing upwards in an environment where water is present, take necessary measures to prevent water from splashing on the rod cover, because water will accumulate on the rod seal due to the structure of the product.

Weight

Weight: Motor Top Mounting Type

Model		LEY25-X5									LEY32-X5										
Stroke [mm]		30	50	100	150	200	250	300	350	400	30	50	100	150	200	250	300	350	400	450	500
Product weight [kg]	Step motor	1.45	1.52	1.69	1.95	2.13	2.30	2.48	2.65	2.83	2.48	2.59	2.88	3.35	3.64	3.91	4.21	4.49	4.76	5.04	5.32
	Servo motor	1.41	1.48	1.65	1.91	2.09	2.26	2.44	2.61	2.79	—	—	—	—	—	—	—	—	—	—	—

Weight: In-line Motor Type

Model		LEY25D-X5									LEY32D-X5										
Stroke [mm]		30	50	100	150	200	250	300	350	400	30	50	100	150	200	250	300	350	400	450	500
Product weight [kg]	Step motor	1.46	1.53	1.70	1.96	2.14	2.31	2.49	2.66	2.84	2.49	2.60	2.89	3.36	3.65	3.92	4.22	4.50	4.77	5.05	5.33
	Servo motor	1.42	1.49	1.66	1.92	2.10	2.27	2.45	2.62	2.80	—	—	—	—	—	—	—	—	—	—	—

Additional Weight

[kg]

Size		25	32
Lock		0.33	0.63
Rod end male thread	Male thread	0.03	0.03
	Nut	0.02	0.02
Foot bracket (2 sets including mounting bolt)		0.08	0.14
Rod flange (including mounting bolt)		0.17	0.20
Head flange (including mounting bolt)			

Construction

Motor top mounting type: LEY$^{25}_{32}$

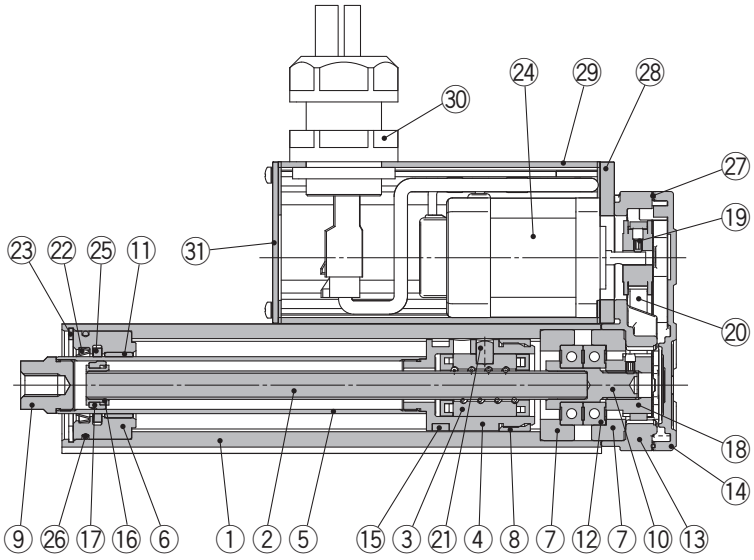

In-line motor type: LEY$^{25}_{32}$D

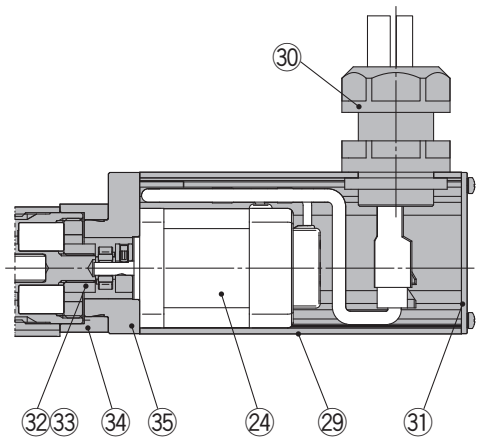

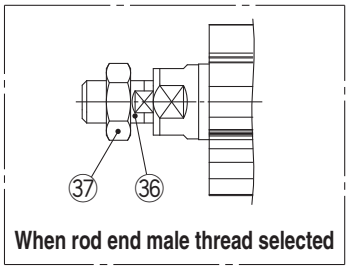

When rod end male thread selected

Component Parts

No.	Description	Material	Note
1	**Body**	Aluminium alloy	Anodised
2	**Ball screw shaft**	Alloy steel	
3	**Ball screw nut**	Synthetic resin/Alloy steel	
4	**Piston**	Aluminium alloy	
5	**Piston rod**	Stainless steel	Hard chrome plating
6	**Rod cover**	Aluminium alloy	
7	**Bearing holder**	Aluminium alloy	
8	**Rotation stopper**	POM	
9	**Socket**	Free cutting carbon steel	Nickel plating
10	**Connected shaft**	Free cutting carbon steel	Nickel plating
11	**Bushing**	Bearing alloy	
12	**Bearing**	—	
13	**Return box**	Aluminium die-cast	Coating
14	**Return plate**	Aluminium die-cast	Coating
15	**Magnet**	—	
16	**Wear ring holder**	Stainless steel	Stroke 101 mm or more
17	**Wear ring**	POM	Stroke 101 mm or more
18	**Screw shaft pulley**	Aluminium alloy	
19	**Motor pulley**	Aluminium alloy	

No.	Description	Material	Note
20	**Belt**	—	
21	**Parallel pin**	Stainless steel	
22	**Scraper**	Nylon	
23	**Retaining ring**	Steel for spring	Phosphate coated
24	**Motor**	—	
25	**Lube-retainer**	Felt	
26	**O-ring**	NBR	
27	**Gasket**	NBR	
28	**Motor adapter**	Aluminium alloy	Anodised
29	**Motor cover**	Aluminium alloy	Anodised
30	**Seal connector**	—	
31	**End cover**	Aluminium alloy	Anodised
32	**Hub**	Aluminium alloy	
33	**Spider**	NBR	
34	**Motor block**	Aluminium alloy	Anodised
35	**Motor adapter**	Aluminium alloy	LEY25 only
36	**Socket (Male thread)**	Free cutting carbon steel	Nickel plating
37	**Nut**	Alloy steel	Zinc chromated

Replacement Parts (Motor top mounting only)/Belt

No.	Size	Order no.
20	**25**	LE-D-2-2
	32	LE-D-2-3

Replacement Parts/Grease Pack

Applied portion	Order no.
Piston rod	GR-S-010 (10 g) GR-S-020 (20 g)

∗ Apply grease on the piston rod periodically.
Grease should be applied at 1 million cycles or 200 km, whichever comes first.

Dimensions

Motor top mounting type

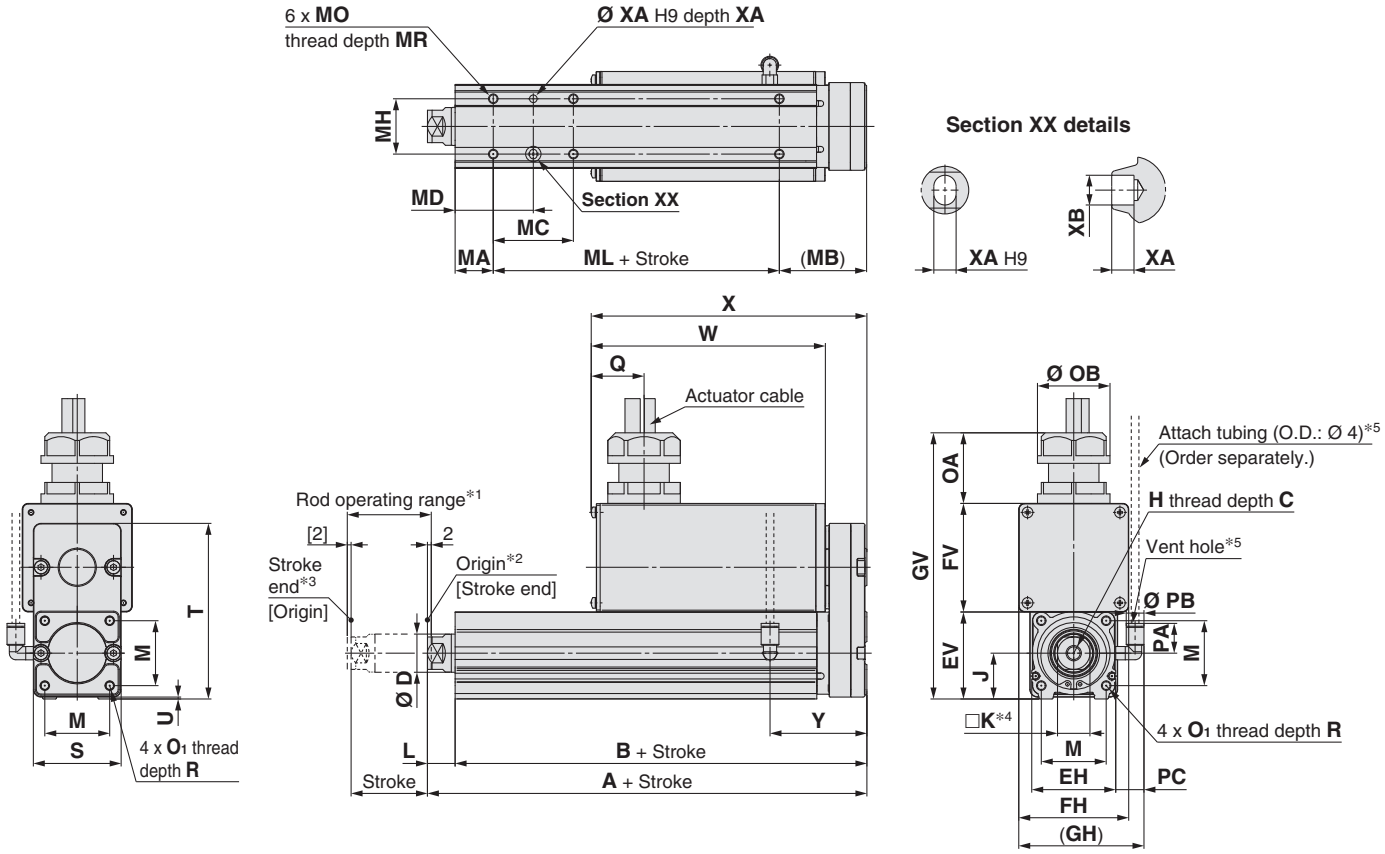

[mm]

Size	Stroke range [mm]	A	B	C	D	EH	EV	FH	FV	GH	GV	H	J	K	L	M	O1
25	15 to 100	130.5	116	13	20	44	45.5	57.6	56.8	66.2	139.5	M8 x 1.25	24	17	14.5	34	M5 x 0.8
	101 to 400	155.5	141														
32	20 to 100	148.5	130	13	25	51	56.5	69.6	78.6	76.2	173.5	M8 x 1.25	31	22	18.5	40	M6 x 1.0
	101 to 500	178.5	160														

Size	Stroke range [mm]	R	OA	OB	PA	PB	Q	S	T	U	PC	W		X		Y
												Without lock	With lock	Without lock	With lock	
25	15 to 100	8	37	38	15.4	8.2	28	46	92	1	15.4	123	173	145	195	51
	101 to 400															
32	20 to 100	10	37	38	15.4	8.2	28	60	118	1	15.9	123	173	150	200	61
	101 to 500															

Body Bottom Tapped

[mm]

Size	Stroke range [mm]	MA	MB	MC	MD	MH	ML	MO	MR	XA	XB
25	15 to 39	20	46	24	32	29	50	M5 x 0.8	6.5	4	5
	40 to 100			42	41						
	101 to 124						75				
	125 to 200			59	49.5						
	201 to 400			76	58						
32	20 to 39	25	55	22	36	30	50	M6 x 1	8.5	5	6
	40 to 100			36	43						
	101 to 124						80				
	125 to 200			53	51.5						
	201 to 500			70	60						

∗1 Range within which the rod can move when it returns to origin
Make sure workpieces mounted on the rod do not interfere with the workpieces and facilities around the rod.
∗2 Position after return to origin
∗3 [ ] for when the direction of return to origin has changed
∗4 The direction of rod end width across flats (□K) differs depending on the products.
∗5 The vent hole is the port for releasing to atmosphere. Do not apply pressure to this hole.
Attach tubing to the vent hole and place the end of the tubing so it is not exposed to dust or water.

For the rod end male thread, refer to page 67. For the mounting bracket dimensions, refer to page 97.

Dimensions

In-line motor type

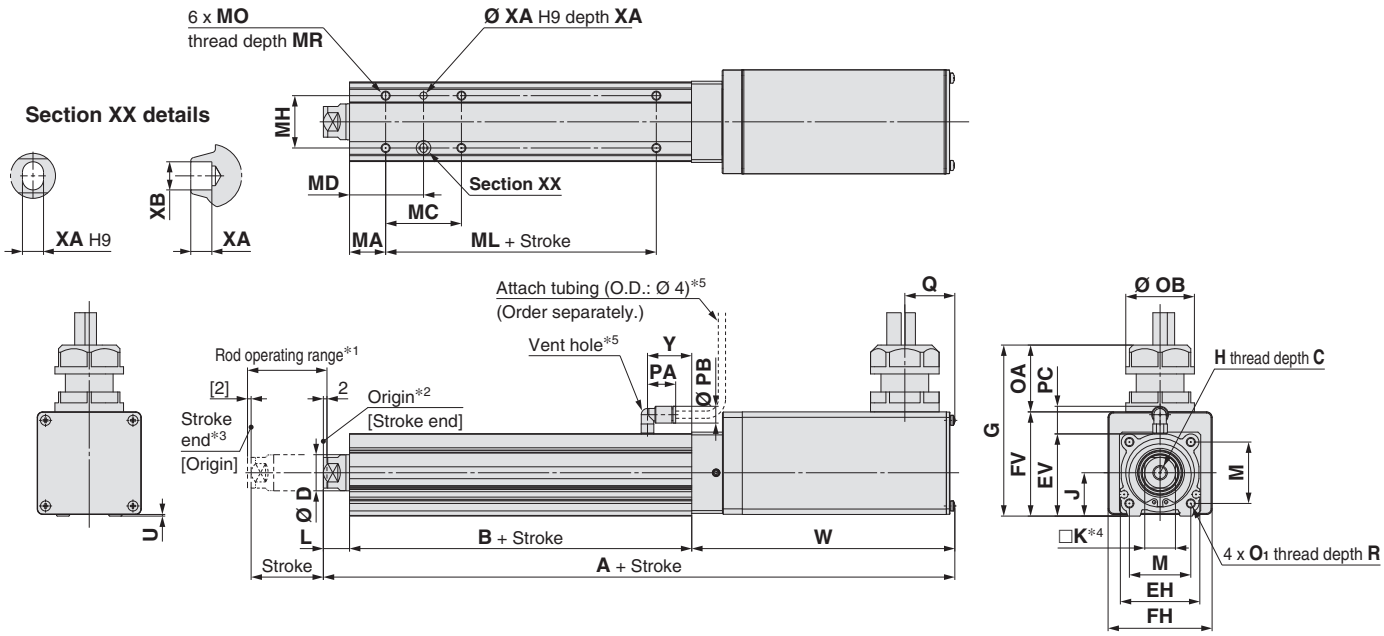

[mm]

Size	Stroke range [mm]	A		B	C	D	EH	EV	FH	FV	G	H	J	K	L
		Without lock	With lock												
25	15 to 100	250	300	89.5	13	20	44	45.5	57.6	57.7	94.7	M8 x 1.25	24	17	14.5
	101 to 400	275	325	114.5											
32	20 to 100	265.5	315.5	96	13	25	51	56.5	69.6	79.6	116.6	M8 x 1.25	31	22	18.5
	101 to 500	295.5	345.5	126											

Size	Stroke range [mm]	M	O_1	R	OA	OB	PA	PB	Q	U	PC	W		Y
												Without lock	With lock	
25	15 to 100	34	M5 x 0.8	8	37	38	15.4	8.2	28	0.9	15.9	146	196	24.5
	101 to 400													
32	20 to 100	40	M6 x 1.0	10	37	38	15.4	8.2	28	1	15.9	151	201	27
	101 to 500													

Body Bottom Tapped

[mm]

Size	Stroke range [mm]	MA	MC	MD	MH	ML	MO	MR	XA	XB
25	15 to 39	20	24	32	29	50	M5 x 0.8	6.5	4	5
	40 to 100		42	41						
	101 to 124					75				
	125 to 200		59	49.5						
	201 to 400		76	58						
32	20 to 39	25	22	36	30	50	M6 x 1	8.5	5	6
	40 to 100		36	43						
	101 to 124					80				
	125 to 200		53	51.5						
	201 to 500		70	60						

∗1 Range within which the rod can move when it returns to origin
Make sure workpieces mounted on the rod do not interfere with the workpieces and facilities around the rod.
∗2 Position after return to origin
∗3 [ ] for when the direction of return to origin has changed
∗4 The direction of rod end width across flats (□K) differs depending on the products.
∗5 The vent hole is the port for releasing to atmosphere. Do not apply pressure to this hole.
Attach tubing to the vent hole and place the end of the tubing so it is not exposed to dust or water.

For the rod end male thread, refer to page 67. For the mounting bracket dimensions, refer to page 97.

Electric Actuator/ Rod Type

Dust-tight/Water-jet-proof (IP65 Equivalent)

LEY-X5 (Made to Order) *Series* LEY25, 32

Refer to page 41 for model selection.

Size 63 is available by selecting option P. Refer to page 79.

CE RoHS

LECY□ Series ▶ p. 169

How to Order

LEY **H** **25** **□** **S2** **B** – **100** **□** **□** **□** – **S** **2** **A1** **□** – **X5**

❶ ❷ ❸ ❹ ❺ ❻ ❼ ❽ ❾ ❿ ⓫ ⓬ ⓭

● Made to order: Dust-tight/ Water-jet-proof

❶ Accuracy

—	Basic type
H	High-precision type

❷ Size

25
32

❸ Motor mounting position

—	Top mounting
D	In-line

❺ Lead [mm]

Symbol	LEY25□	LEY32□*1
A	12	16 (20)
B	6	8 (10)
C	3	4 (5)

*1 The values shown in ( ) are the equivalent leads which include the pulley ratio for the size 32 top mounting type.

❹ Motor type

Symbol	Type	Output [W]	Actuator size	Compatible driver
S2*1	AC servo motor (Incremental encoder)	100	25	LECSA□-S1
S3		200	32	LECSA□-S3
S6*1	AC servo motor (Absolute encoder)	100	25	LECSB□-S5 LECSC□-S5 LECSS□-S5
S7		200	32	LECSB□-S7 LECSC□-S7 LECSS□-S7
T6*2	AC servo motor (Absolute encoder)	100	25	LECSS2-T5
T7		200	32	LECSS2-T7

*1 For motor type S2 and S6, the compatible driver part number suffixes are S1 and S5 respectively.
*2 For motor type T6, the compatible driver part number suffix is T5.

❻ Stroke [mm]

30	30
to	to
500	500

* For details, refer to the applicable stroke table below.

❼ Motor option

—	Without option
B	With lock*1

*1 When "With lock" is selected for the top mounting type, the motor body will stick out from the end of the body for size 25 with strokes of 30 mm or less. Check for interference with workpieces before selecting a model.

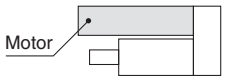

❽ Rod end thread

—	Rod end female thread
M	Rod end male thread (1 rod end nut is included.)

❾ Mounting*1

Symbol	Type	Motor mounting position: Top mounting	Motor mounting position: In-line
—	Ends tapped/ Body bottom tapped*2	●	●
L	Foot	●	—
F	Rod flange*2	●*3	●
G	Head flange*2	●*4	—

*1 The mounting bracket is shipped together with the product but does not come assembled.
*2 For the horizontal cantilever mounting of the rod flange, head flange, or ends tapped types, use the actuator within the following stroke range.
• LEY25: 200 mm or less
• LEY32: 100 mm or less
*3 The rod flange type is not available for the LEY25 with a 30 mm stroke and motor option "With lock."
*4 The head flange type is not available for the LEY32.

❿ Cable type*1 *2

—	Without cable
S	Standard cable
R	Robotic cable (Flexible cable)

*1 The motor and encoder cables are included. (The lock cable is also included when the motor with lock option is selected.)
*2 Standard cable entry direction is
• Top mounting: (A) Axis side
• In-line: (B) Counter axis side
(Refer to page 264 for details.)

⓫ Cable length [m]*1

—	Without cable
2	2
5	5
A	10

*1 The length of the encoder, motor, and lock cables are the same.

⓬ Driver type*1

	Compatible driver	Power supply voltage [V]
—	Without driver	—
A1	LECSA1-S□	100 to 120
A2	LECSA2-S□	200 to 230
B1	LECSB1-S□	100 to 120
B2	LECSB2-S□	200 to 230
C1	LECSC1-S□	100 to 120
C2	LECSC2-S□	200 to 230
S1	LECSS1-S□	100 to 120
S2	LECSS2-S□	200 to 230
	LECSS2-T□	200 to 240

*1 When a driver type is selected, a cable is included. Select the cable type and cable length.
Example)
S2S2: Standard cable (2 m) + Driver (LECSS2)
S2 : Standard cable (2 m)
— : Without cable and driver

⓭ I/O cable length [m]*1

—	Without cable
H	Without cable (Connector only)
1	1.5

*1 When "Without driver" is selected for driver type, only "—: Without cable" can be selected. Refer to page 265 if I/O cable is required. (Options are shown on page 265.)

Applicable Stroke Table

●: Standard

Model \ Stroke	30	50	100	150	200	250	300	350	400	450	500	Manufacturable stroke range [mm]
LEY25	●	●	●	●	●	●	●	●	●	—	—	15 to 400
LEY32	●	●	●	●	●	●	●	●	●	●	●	20 to 500

* Please consult with SMC for non-standard strokes as they are produced as special orders.

* For auto switches, refer to page 176.

SMC

Specifications: LECSA/LECSB/LECSC/LECSS

Model				LEY25S$^{2}_{6}$/T6-X5 /LEY25DS$^{2}_{6}$/T6-X5			LEY32S$^{3}_{7}$/T7-X5 (Top mounting)			LEY32DS$^{3}_{7}$/T7-X5 (In-line)		
Actuator specifications	Work load [kg]	Horizontal*1		18	50	50	30	60	60	30	60	60
		Vertical*8		8	16	30	9	19	37	12	24	46
	Force [N]*2 (Set value: 15 to 30%)*15			65 to 131	127 to 255	242 to 485	79 to 157	154 to 308	294 to 588	98 to 197	192 to 385	368 to 736
	Max. speed [mm/s]*3	Stroke range	Up to 300	900	450	225	1200	600	300	1000	500	250
			305 to 400	600	300	150						
			405 to 500	—	—	—	800	400	200	640	320	160
	Pushing speed [mm/s]*4			35 or less			30 or less			30 or less		
	Max. acceleration/deceleration [mm/s²]			5000			5000					
	Positioning repeatability [mm]		Basic type	±0.02								
			High-precision type	±0.01								
	Lost motion [mm]*5		Basic type	0.1 or less								
			High-precision type	0.05 or less								
	Lead [mm]			12	6	3	20	10	5	16	8	4
	Impact/Vibration resistance [m/s²]*6			50/20			50/20					
	Actuation type			Ball screw + Belt/Ball screw			Ball screw + Belt [1.25:1]			Ball screw		
	Guide type			Sliding bushing (Piston rod)			Sliding bushing (Piston rod)					
	Enclosure*7			IP65 equivalent								
	Operating temperature range [°C]			5 to 40			5 to 40					
	Operating humidity range [%RH]			90 or less (No condensation)			90 or less (No condensation)					
	Regeneration option			May be required depending on speed and work load (Refer to pages 45 and 46.)								
Electric specifications	Motor output/Size			100 W/□40			200 W/□60					
	Motor type			AC servo motor (100/200 VAC)			AC servo motor (100/200 VAC)					
	Encoder			Motor type S2, S3: Incremental 17-bit encoder (Resolution: 131072 p/rev) Motor type S6, S7: Absolute 18-bit encoder (Resolution: 262144 p/rev) Motor type T6, T7: Absolute 22-bit encoder (Resolution: 4194304 p/rev)								
	Power consumption [W]*9		Horizontal	45			65			65		
			Vertical	145			175			175		
	Standby power consumption when operating [W]*10		Horizontal	2			2			2		
			Vertical	8			8			8		
	Max. instantaneous power consumption [W]*11			445			724			724		
Lock unit specifications	Type*12			Non-magnetizing lock								
	Holding force [N]			131	255	485	157	308	588	197	385	736
	Power consumption [W] at 20°C*13			6.3			7.9			7.9		
	Rated voltage [V]			24 VDC $^{0}_{-10\ \%}$								

*1 This is the maximum value of the horizontal work load. An external guide is necessary to support the load. The actual work load changes according to the condition of the external guide. Confirm the load using the actual device.
*2 The force setting range (set values for the driver) for the force control with the torque control mode
Set it with reference to "Force Conversion Graph" on pages 45 and 46. When the control equivalent to the pushing operation of the controller LECP6 series is performed, combine the Simple Motion module (manufactured by Mitsubishi Electric Corporation) which has a pushing operation function.
*3 The allowable speed changes according to the stroke.
*4 The allowable collision speed for collision with the workpiece with the torque control mode
*5 A reference value for correcting an error in reciprocal operation
*6 Impact resistance: No malfunction occurred when the actuator was tested with a drop tester in both an axial direction and a perpendicular direction to the lead screw. (The test was performed with the actuator in the initial state.)
Vibration resistance: No malfunction occurred in a test ranging between 45 to 2000 Hz. The test was performed in both an axial direction and a perpendicular direction to the lead screw. (The test was performed with the actuator in the initial state.)
*7 Cannot be used in an environment where oil such as cutting oil splashes or it is constantly exposed to water Take appropriate protective measures. For details on enclosure, refer to "Enclosure" on page 188.
*8 When mounting vertically and using the product facing upwards in an environment where water is present, take necessary measures to prevent water from splashing on the rod cover, because water will accumulate on the rod seal due to the structure of the product.
*9 The power consumption (including the driver) is for when the actuator is operating.
*10 The standby power consumption when operating (including the driver) is for when the actuator is stopped in the set position during the operation.
*11 The maximum instantaneous power consumption (including the driver) is for when the actuator is operating.
*12 Only when motor option "With lock" is selected
*13 For an actuator with lock, add the power consumption for the lock.
*14 The resolution will change depending on the driver type.
*15 For motor type T6 and T7, the set value is from 12 to 24 %.

Weight

Product Weight

Series			LEY25S$^{2}_{6}$/T6-X5 (Motor mounting position: Top mounting)									LEY32S$^{3}_{7}$/T7-X5 (Motor mounting position: Top mounting)										
Stroke [mm]			30	50	100	150	200	250	300	350	400	30	50	100	150	200	250	300	350	400	450	500
Motor type	Incremental encoder		1.31	1.38	1.55	1.81	1.99	2.16	2.34	2.51	2.69	2.42	2.53	2.82	3.29	3.57	3.85	4.14	4.42	4.70	4.98	5.26
	Absolute encoder	S6/S7	1.37	1.44	1.61	1.87	2.05	2.22	2.40	2.57	2.75	2.36	2.47	2.76	3.23	3.51	3.79	4.08	4.36	4.64	4.92	5.20
		T6/T7	1.4	1.5	1.6	1.9	2.0	2.2	2.4	2.6	2.7	2.3	2.4	2.7	3.2	3.5	3.8	4.1	4.3	4.6	4.9	5.2

Series			LEY25DS$^{2}_{6}$/T6-X5 (Motor mounting position: In-line)									LEY32DS$^{3}_{7}$/T7-X5 (Motor mounting position: In-line)										
Stroke [mm]			30	50	100	150	200	250	300	350	400	30	50	100	150	200	250	300	350	400	450	500
Motor type	Incremental encoder		1.34	1.41	1.58	1.84	2.02	2.19	2.37	2.54	2.72	2.44	2.55	2.84	3.31	3.59	3.87	4.16	4.44	4.72	5.00	5.28
	Absolute encoder	S6/S7	1.40	1.47	1.64	1.90	2.08	2.25	2.43	2.60	2.78	2.38	2.49	2.78	3.25	3.53	3.81	4.10	4.38	4.66	4.94	5.22
		T6/T7	1.4	1.5	1.6	1.9	2.1	2.2	2.4	2.6	2.8	2.4	2.5	2.8	3.2	3.5	3.8	4.1	4.4	4.6	4.9	5.2

Additional Weight

[kg]

Size		25	32
Lock	Incremental encoder	0.20	0.40
	Absolute encoder	0.30	0.66
Rod end male thread	Male thread	0.03	0.03
	Nut	0.02	0.02
Foot bracket (2 sets including mounting bolt)		0.08	0.14
Rod flange (including mounting bolt)		0.17	0.20
Head flange (including mounting bolt)			
Double clevis (including pin, retaining ring, and mounting bolt)		0.16	0.22

Construction

Motor top mounting type: LEY$^{25}_{32}$

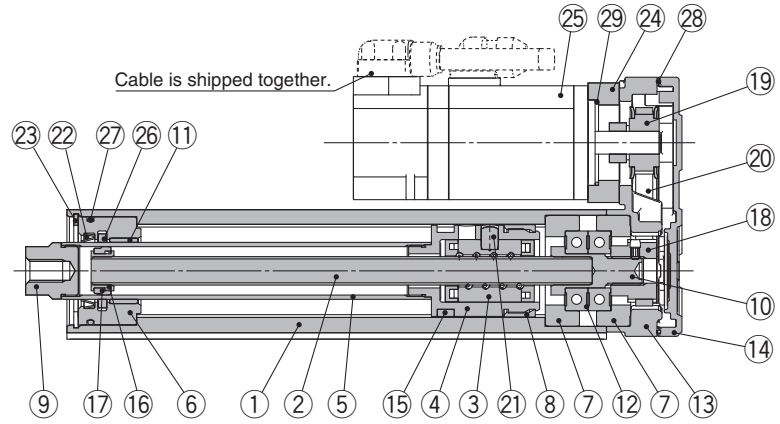

In-line motor type: LEY$^{25}_{32}$D

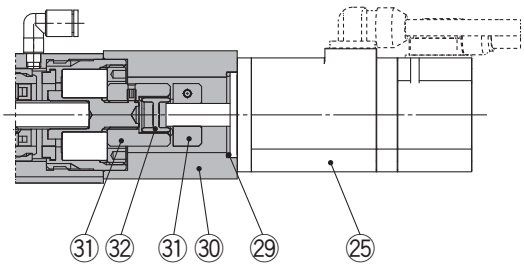

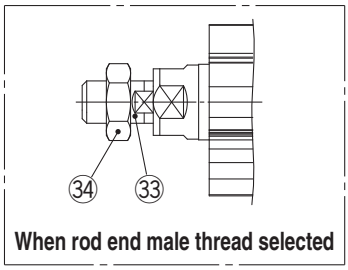

When rod end male thread selected

Component Parts

No.	Description	Material	Note
1	**Body**	Aluminium alloy	Anodised
2	**Ball screw shaft**	Alloy steel	
3	**Ball screw nut**	Synthetic resin/Alloy steel	
4	**Piston**	Aluminium alloy	
5	**Piston rod**	Stainless steel	Hard chrome plating
6	**Rod cover**	Aluminium alloy	
7	**Bearing holder**	Aluminium alloy	
8	**Rotation stopper**	POM	
9	**Socket**	Free cutting carbon steel	Nickel plating
10	**Connected shaft**	Free cutting carbon steel	Nickel plating
11	**Bushing**	Bearing alloy	
12	**Bearing**	—	
13	**Return box**	Aluminium die-cast	Coating
14	**Return plate**	Aluminium die-cast	Coating
15	**Magnet**	—	
16	**Wear ring holder**	Stainless steel	Stroke 101 mm or more
17	**Wear ring**	POM	Stroke 101 mm or more

No.	Description	Material	Note
18	**Screw shaft pulley**	Aluminium alloy	
19	**Motor pulley**	Aluminium alloy	
20	**Belt**	—	
21	**Parallel pin**	Stainless steel	
22	**Scraper**	Nylon	
23	**Retaining ring**	Steel for spring	Phosphate coated
24	**Motor adapter**	Aluminium alloy	Coating
25	**Motor**	—	
26	**Lube-retainer**	Felt	
27	**O-ring**	NBR	
28	**Gasket**	NBR	
29	**O-ring**	NBR	
30	**Motor block**	Aluminium alloy	Coating
31	**Hub**	Aluminium alloy	
32	**Spider**	Urethane	
33	**Socket (Male thread)**	Free cutting carbon steel	Nickel plating
34	**Nut**	Alloy steel	Trivalent chromated

Replacement Parts (Motor top mounting only)/Belt

No.	Size	Order no.
20	**25**	LE-D-2-2
	32	LE-D-2-4

Replacement Parts/Grease Pack

Applied portion	Order no.
Piston rod	GR-S-010 (10 g) GR-S-020 (20 g)

∗ Apply grease on the piston rod periodically.
Grease should be applied at 1 million cycles or 200 km, whichever comes first.

Dimensions

Motor top mounting type: LEY$^{25}_{32}$

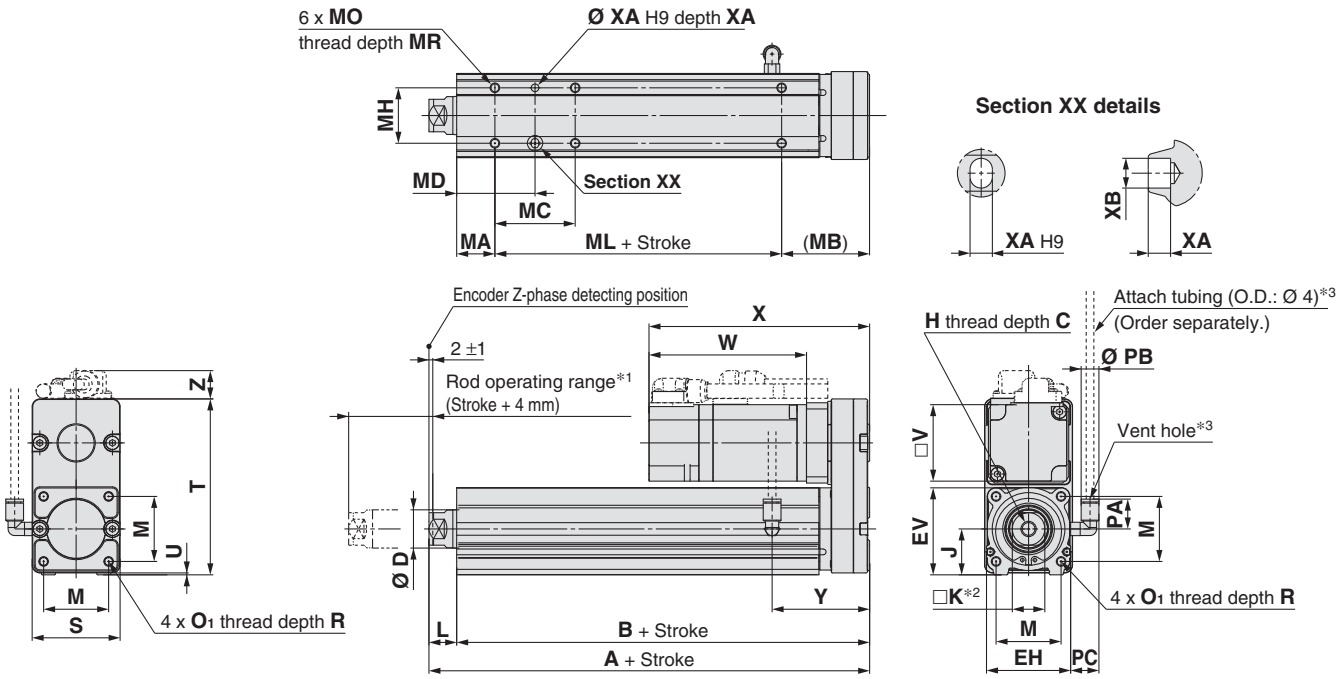

[mm]

Size	Stroke range [mm]	A	B	C	D	EH	EV	H	J	K	L	M	O1	R	PA	PB	V	S	T	U
25	15 to 100	130.5	116	13	20	44	45.5	M8 x 1.25	24	17	14.5	34	M5 x 0.8	8	15.4	8.2	40	46	92	1
	101 to 400	155.5	141																	
32	20 to 100	148.5	130	13	25	51	56.5	M8 x 1.25	31	22	18.5	40	M6 x 1.0	10	15.4	8.2	60	60	118	1
	101 to 500	178.5	160																	

Size	Stroke range [mm]	PC	Incremental encoder						Absolute encoder [S6/S7]						Absolute encoder [T6/T7]						Y
			Without lock			With lock			Without lock			With lock			Without lock			With lock			
			W	X	Z	W	X	Z	W	X	Z	W	X	Z	W	X	Z	W	X	Z	
25	15 to 100	15.4	87	120	14.1	123.9	156.9	15.8	82.4	115.4	14.1	123.5	156.5	15.8	82.4	115.4	14.1	123	156	15.8	51
	101 to 400																				
32	20 to 100	15.9	88.2	128.2	17.1	116.8	156.8	17.1	76.6	116.6	17.1	116.1	156.1	17.1	76.6	116.6	17.1	113.4	153.4	17.1	61
	101 to 500																				

Body Bottom Tapped

[mm]

Size	Stroke range [mm]	MA	MB	MC	MD	MH	ML	MO	MR	XA	XB
25	15 to 39	20	46	24	32	29	50	M5 x 0.8	6.5	4	5
	40 to 100			42	41						
	101 to 124						75				
	125 to 200			59	49.5						
	201 to 400			76	58						
32	20 to 39	25	55	22	36	30	50	M6 x 1	8.5	5	6
	40 to 100			36	43						
	101 to 124						80				
	125 to 200			53	51.5						
	201 to 500			70	60						

∗1 Range within which the rod can move
Make sure workpieces mounted on the rod do not interfere with the workpieces and facilities around the rod.
∗2 The direction of rod end width across flats (□K) differs depending on the products.
∗3 The vent hole is the port for releasing to atmosphere. Do not apply pressure to this hole.
Attach tubing to the vent hole and place the end of the tubing so it is not exposed to dust or water.

For the rod end male thread, refer to page 77. For the mounting bracket dimensions, refer to page 97.

Dimensions

In-line motor type: LEY$^{25}_{32}$D

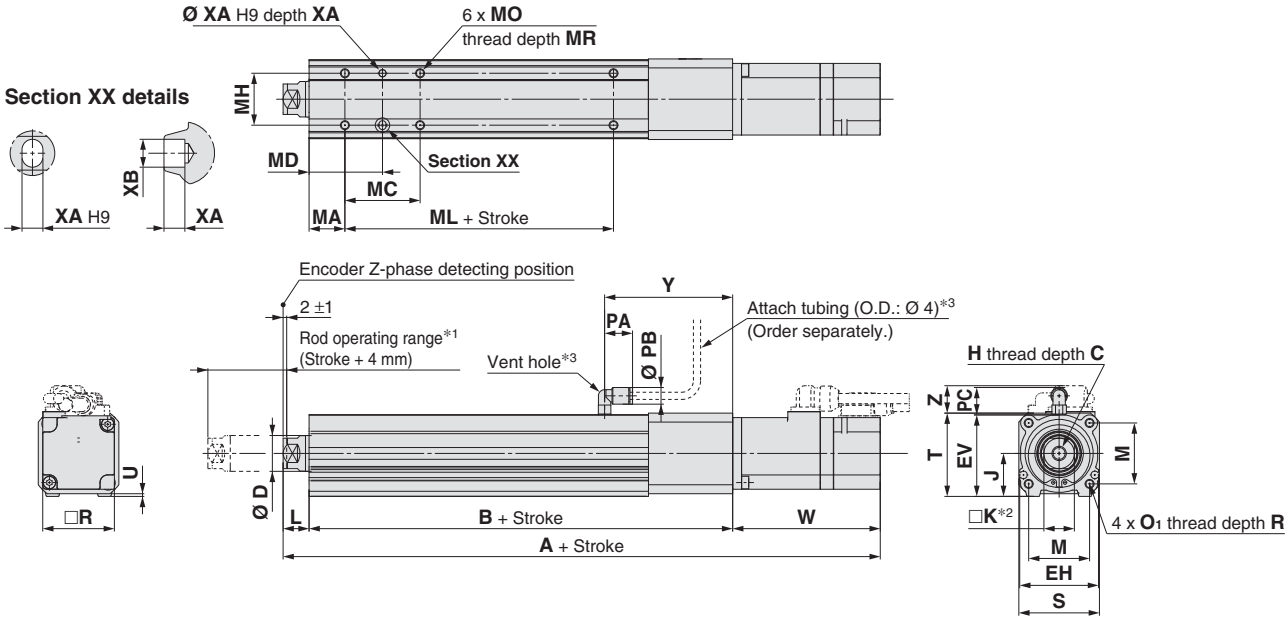

[mm]

Size	Stroke range [mm]	Incremental encoder						Absolute encoder [S6/S7]						Absolute encoder [T6/T7]						B
		Without lock			With lock			Without lock			With lock			Without lock			With lock			
		A	W	Z	A	W	Z	A	W	Z	A	W	Z	A	VB	VC	A	VB	VC	
25	15 to 100	238	87	14.6	274.9	123.9	16.3	233.4	82.4	14.6	274.5	123.5	16.3	233.4	82.4	14.6	274	123	16.3	136.5
	101 to 400	263			299.9			258.4			299.5			258.4			299			161.5
32	20 to 100	262.7	88.2	17.1	291.3	116.8	17.1	251.1	76.6	17.1	290.6	116.1	17.1	251.1	76.6	17.1	287.9	113.4	17.1	156
	101 to 500	292.7			321.3			281.1			320.6			281.1			317.9			186

Size	Stroke range [mm]	C	D	EH	EV	H	J	K	L	M	O1	R	PA	PB	V	S	T	U	PC	Y
25	15 to 100	13	20	44	45.5	M8 x 1.25	24	17	14.5	34	M5 x 0.8	8	15.4	8.2	40	45	46.5	1.5	15.9	71.5
	101 to 400																			
32	20 to 100	13	25	51	56.5	M8 x 1.25	31	22	18.5	40	M6 x 1.0	10	15.4	8.2	60	60	61	1	15.9	87
	101 to 500																			

Body Bottom Tapped

[mm]

Size	Stroke range [mm]	MA	MC	MD	MH	ML	MO	MR	XA	XB
25	15 to 39	20	24	32	29	50	M5 x 0.8	6.5	4	5
	40 to 100		42	41						
	101 to 124					75				
	125 to 200		59	49.5						
	201 to 400		76	58						
32	20 to 39	25	22	36	30	50	M6 x 1	8.5	5	6
	40 to 100		36	43						
	101 to 124					80				
	125 to 200		53	51.5						
	201 to 500		70	60						

*1 Range within which the rod can move
Make sure workpieces mounted on the rod do not interfere with the workpieces and facilities around the rod.
*2 The direction of rod end width across flats (□K) differs depending on the products.
*3 The vent hole is the port for releasing to atmosphere. Do not apply pressure to this hole.
Attach tubing to the vent hole and place the end of the tubing so it is not exposed to dust or water.

For the rod end male thread, refer to page 77. For the mounting bracket dimensions, refer to page 97.

Electric Actuator/ Rod Type

Dust-tight/Water-jet-proof (IP65 Equivalent)

LEY-X5 (Made to Order) *Series* LEY25, 32

Refer to page 48 for model selection.

Size 63 is available by selecting option P. Refer to page 87.

CE RoHS

LECS□ Series ▶ p. 163

How to Order

LEY **H** **25** **□** **V6** **B** – **200** **□** **□** **□** – **S** **3** **M2** **□** – **X5**

❶ ❷ ❸ ❹ ❺ ❻ ❼ ❽ ❾ ❿ ⓫ ⓬ ⓭

● **Made to order: Dust-tight/ Water-jet-proof**

❶ Accuracy

—	Basic type
H	High-precision type

❷ Size

25
32

❸ Motor mounting position

—	Top mounting
D	In-line

❹ Motor type

Symbol	Type	Output [W]	Size	Compatible driver
V6∗1	AC servo motor (Absolute encoder)	100	25	LECYM2-V5 LECYU2-V5
V7		200	32	LECYM2-V7 LECYU2-V7

∗1 For motor type V6, the compatible driver part number suffix is V5.

❺ Lead [mm]

Symbol	LEY25	LEY32
A	12	16 (20)
B	6	8 (10)
C	3	4 (5)

∗ The values shown in ( ) are the leads for the top mounting type. (Equivalent leads which include the pulley ratio [1.25:1])

❻ Stroke [mm]

30	30
to	to
500	500

∗ For details, refer to the applicable stroke table below.

❼ Motor option

—	Without option
B	With lock

∗ When "With lock" is selected for the top mounting type, the motor body will stick out from the end of the body for size 25 with strokes of 30 mm or less.
Check for interference with workpieces before selecting a model.

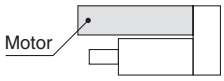

❽ Rod end thread

—	Rod end female thread
M	Rod end male thread (1 rod end nut is included.)

Applicable Stroke Table

●: Standard

Model \ Stroke [mm]	30	50	100	150	200	250	300	350	400	450	500	Manufacturable stroke range
LEY25	●	●	●	●	●	●	●	●	●	—	—	15 to 400
LEY32	●	●	●	●	●	●	●	●	●	●	●	20 to 500

∗ Please consult with SMC for non-standard strokes as they are produced as special orders.

For auto switches, refer to page 176.

Motor mounting position: Top mounting

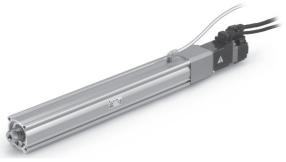

Motor mounting position: In-line

⑨ Mounting*1

Symbol	Type	Motor mounting position	
		Top mounting	In-line
—	Ends tapped/ Body bottom tapped*2	●	●
L	Foot	●	—
F	Rod flange*2	●*3	●
G	Head flange*2	●*4	—

*1 The mounting bracket is shipped together with the product but does not come assembled.
*2 For the horizontal cantilever mounting of the ends tapped, rod flange, or head flange types, use the actuator within the following stroke range.
· LEY25: 200 mm or less · LEY32: 100 mm or less
*3 The rod flange type is not available for the LEY25 with a 30 mm stroke and motor option "With lock."
*4 The head flange type is not available for the LEY32.

⑩ Cable type*1

—	Without cable
S	Standard cable
R	Robotic cable (Flexible cable)

*1 The motor and encoder cables are included. The motor cable for lock option is included when the motor with lock option is selected.

⑪ Cable length [m]*1

—	Without cable
3	3
5	5
A	10
C	20

*1 The length of the motor and encoder cables are the same. (For with lock)

⑫ Driver type

	Compatible driver	Power supply voltage [V]
—	Without driver	—
M2	LECYM2-V□	200 to 230
U2	LECYU2-V□	200 to 230

* When a driver type is selected, a cable is included. Select the cable type and cable length.

⑬ I/O cable length [m]*1

—	Without cable
H	Without cable (Connector only)
1	1.5

*1 When "Without driver" is selected for driver type, only "—: Without cable" can be selected. Refer to page 278 if I/O cable is required. (Options are shown on page 278.)

Compatible Driver

Driver type	MECHATROLINK-Ⅱ type	MECHATROLINK-Ⅲ type
Series	LECYM	LECYU
Applicable network	MECHATROLINK-Ⅱ	MECHATROLINK-Ⅲ
Control encoder	Absolute 20-bit encoder	
Communication device	USB communication, RS-422 communication	
Power supply voltage [V]	200 to 230 VAC (50/60 Hz)	
Reference page	271	

Specifications: LECY

Model			LEY25V6-X5/LEY25DV6-X5			LEY32V7-X5 (Top mounting)			LEY32DV7-X5 (In-line)		
Actuator specifications	Work load [kg]	Horizontal*1	18	50	50	30	60	60	30	60	60
		Vertical*9	8	16	30	9	19	37	12	24	46
	Force [N]*2 (Set value: 45 to 90 %)		65 to 131	127 to 255	242 to 485	79 to 157	154 to 308	294 to 588	98 to 197	192 to 385	368 to 736
	Max.*3 speed [mm/s] Stroke range	Up to 300	900	450	225	1200	600	300	1000	500	250
		305 to 400	600	300	150						
		405 to 500	—	—	—	800	400	200	640	320	160
	Pushing speed [mm/s]*4		35 or less			30 or less			30 or less		
	Max. acceleration/deceleration [mm/s²]		5000			5000					
	Positioning repeatability [mm]	Basic type	±0.02			±0.02					
		High-precision type	±0.01			±0.01					
	Lost motion [mm]*5	Basic type	0.1 or less			0.1 or less					
		High-precision type	0.05 or less			0.05 or less					
	Lead [mm] (including pulley ratio)		12	6	3	20*6	10*6	5*6	16	8	4
	Impact/Vibration resistance [m/s²]*7		50/20			50/20					
	Actuation type		Ball screw + Belt (LEY□)/Ball screw (LEY□D)			Ball screw + Belt [1.25:1]			Ball screw		
	Guide type		Sliding bushing (Piston rod)			Sliding bushing (Piston rod)					
	Enclosure*8		IP65 equivalent								
	Operating temperature range [°C]		5 to 40			5 to 40					
	Operating humidity range [%RH]		90 or less (No condensation)			90 or less (No condensation)					
	Conditions for*10 "Regenerative resistor" [kg]	Horizontal	Not required			Not required					
		Vertical	6 or more			4 or more					
Electric specifications	Motor output/Size		100 W/□40			200 W/□60					
	Motor type		AC servo motor (200 VAC)			AC servo motor (200 VAC)					
	Encoder		Absolute 20-bit encoder (Resolution: 1048576 p/rev)								
	Power consumption [W]*11	Horizontal	45			65			65		
		Vertical	145			175			175		
	Standby power consumption when operating [W]*12	Horizontal	2			2			2		
		Vertical	8			8			8		
	Max. instantaneous power consumption [W]*13		445			724			724		
Lock unit specifications	Type*14		Non-magnetising lock								
	Holding force [N]		131	255	485	157	308	588	197	385	736
	Power consumption [W] at 20 °C*15		5.5			6			6		
	Rated voltage [V]		24 VDC $^{+10\ \%}_{0}$								

*1 This is the maximum value of the horizontal work load. An external guide is necessary to support the load. The actual work load changes according to the condition of the external guide. Confirm the load using the actual device.
*2 The force setting range (set values for the driver) for the force control with the torque control mode
Set it with reference to "Force Conversion Graph (Guide)" on page 52.
*3 The allowable speed changes according to the stroke.
*4 The allowable collision speed for collision with the workpiece with the torque control mode
*5 A reference value for correcting an error in reciprocal operation
*6 Equivalent leads which include the pulley ratio [1.25:1]
*7 Impact resistance: No malfunction occurred when the actuator was tested with a drop tester in both an axial direction and a perpendicular direction to the lead screw. (The test was performed with the actuator in the initial state.)
Vibration resistance: No malfunction occurred in a test ranging between 45 to 2000 Hz. The test was performed in both an axial direction and a perpendicular direction to the lead screw. (The test was performed with the actuator in the initial state.)
*8 Cannot be used in an environment where oil such as cutting oil splashes or it is constantly exposed to water Take appropriate protective measures. For details on enclosure, refer to "Enclosure" on page 188.
*9 When mounting vertically and using the product facing upwards in an environment where water is present, take necessary measures to prevent water from splashing on the rod cover, because water will accumulate on the rod seal due to the structure of the product.
*10 The work load conditions which require "Regenerative resistor" when operating at the maximum speed (Duty ratio: 100 %)
Order the regenerative resistor separately. For details, refer to "Conditions for Regenerative Resistor (Guide)" on pages 51 and 52.
*11 The power consumption (including the driver) is for when the actuator is operating.
*12 The standby power consumption when operating (including the driver) is for when the actuator is stopped in the set position during the operation.
*13 The maximum instantaneous power consumption (including the driver) is for when the actuator is operating.
*14 Only when motor option "With lock" is selected
*15 For an actuator with lock, add the power consumption for the lock.

Weight

Product Weight

[kg]

Series	LEY25V6 (Motor mounting position: Top mounting)									LEY32V7 (Motor mounting position: Top mounting)										
Stroke [mm]	30	50	100	150	200	250	300	350	400	30	50	100	150	200	250	300	350	400	450	500
Weight [kg]	1.2	1.3	1.6	1.7	1.9	2.1	2.2	2.4	2.6	2.3	2.4	2.7	3.2	3.5	3.8	4.0	4.3	4.6	4.9	5.2

Series	LEY25DV6 (Motor mounting position: In-line)									LEY32DV7 (Motor mounting position: In-line)										
Stroke [mm]	30	50	100	150	200	250	300	350	400	30	50	100	150	200	250	300	350	400	450	500
Weight [kg]	1.2	1.3	1.5	1.7	1.9	2.1	2.3	2.4	2.6	2.3	2.4	2.7	3.2	3.5	3.8	4.1	4.3	4.6	4.9	5.2

Additional Weight

[kg]

Size		25	32
Lock		0.30	0.60
Rod end male thread	Male thread	0.03	0.03
	Nut	0.02	0.02
Foot bracket (2 sets including mounting bolt)		0.08	0.14
Rod flange (including mounting bolt)		0.17	0.20
Head flange (including mounting bolt)			

Dimensions

Motor top mounting type: LEY$^{25}_{32}$

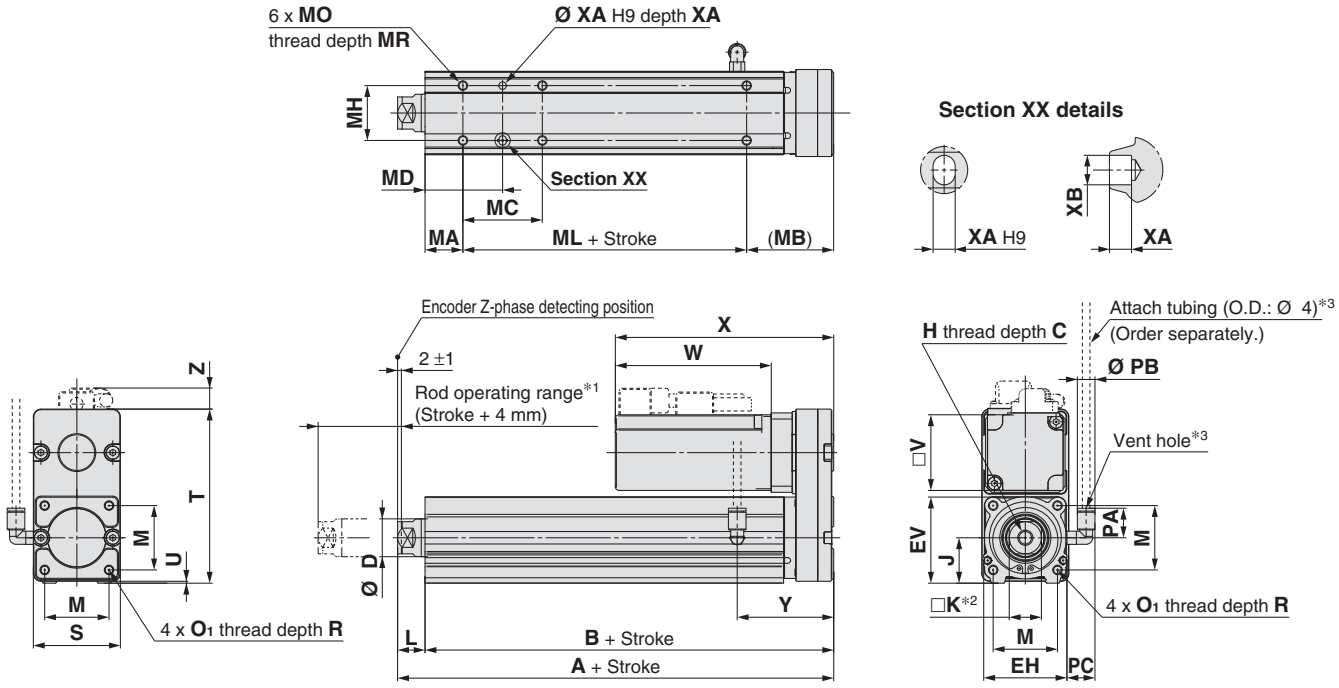

[mm]

Size	Stroke range [mm]	A	B	C	D	EH	EV	H	J	K	L	M	O_1	R	PA	PB	V
25	15 to 100	130.5	116	13	20	44	45.5	M8 x 1.25	24	17	14.5	34	M5 x 0.8	8	15.4	8.2	40
	101 to 400	155.5	141														
32	20 to 100	148.5	130	13	25	51	56.5	M8 x 1.25	31	22	18.5	40	M6 x 1.0	10	15.4	8.2	60
	101 to 500	178.5	160														

Size	Stroke range [mm]	S	T	U	PC	Without lock			With lock			Y
						W	X	Z	W	X	Z	
25	15 to 100	46	92	1	15.4	82.5	115.5	11	127.5	160.5	11	51
	101 to 400											
32	20 to 100	60	118	1	15.9	80	120	14	120	160	14	61
	101 to 500											

Body Bottom Tapped

[mm]

Size	Stroke range [mm]	MA	MB	MC	MD	MH	ML	MO	MR	XA	XB
25	15 to 39	20	46	24	32	29	50	M5 x 0.8	6.5	4	5
	40 to 100			42	41						
	101 to 124						75				
	125 to 200			59	49.5						
	201 to 400			76	58						
32	20 to 39	25	55	22	36	30	50	M6 x 1	8.5	5	6
	40 to 100			36	43						
	101 to 124						80				
	125 to 200			53	51.5						
	201 to 500			70	60						

∗1 Range within which the rod can move
Make sure workpieces mounted on the rod do not interfere with the workpieces and facilities around the rod.
∗2 The direction of rod end width across flats (□K) differs depending on the products.
∗3 The vent hole is the port for releasing to atmosphere. Do not apply pressure to this hole.
Attach tubing to the vent hole and place the end of the tubing so it is not exposed to dust or water.

For the rod end male thread, refer to page 77. For the mounting bracket dimensions, refer to page 97.

Dimensions

In-line motor type: LEY$^{25}_{32}$D

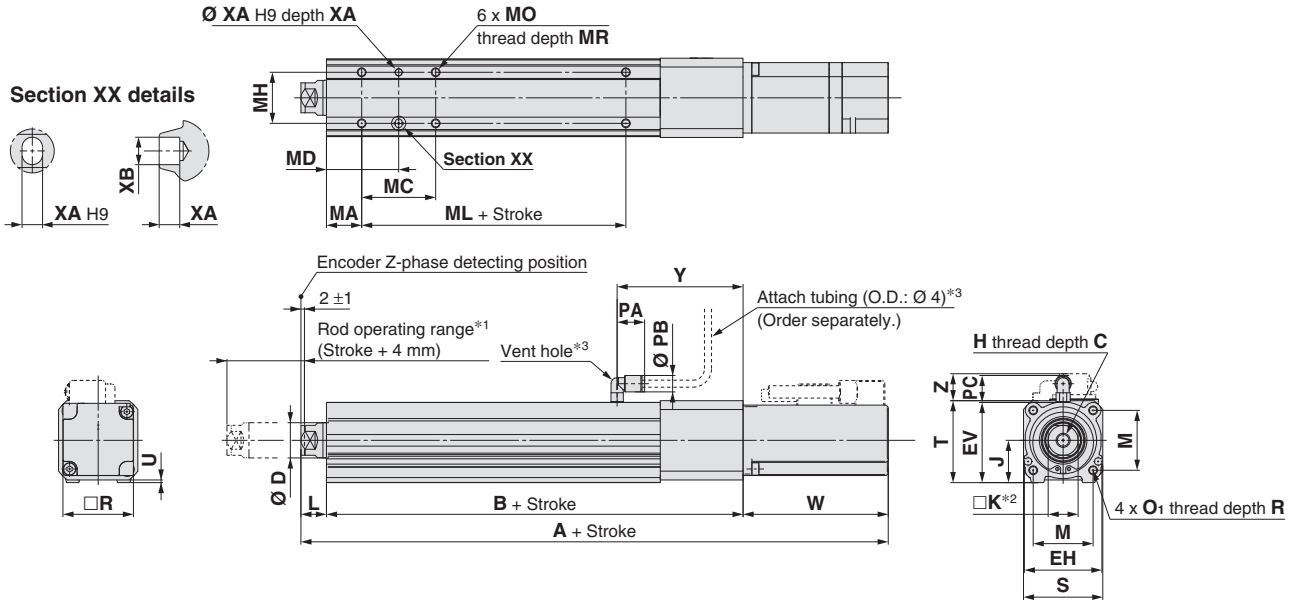

[mm]

Size	Stroke range [mm]	Without lock			With lock			B	C	D	EH	EV
		A	W	Z	A	W	Z					
25	15 to 100	233.5	82.5	11.5	278.5	127.5	11.5	136.5	13	20	44	45.5
	101 to 400	258.5			303.5			161.5				
32	20 to 100	254.5	80	14	294.5	120	14	156	13	25	51	56.5
	101 to 500	284.5			324.5			186				

Size	Stroke range [mm]	H	J	K	L	M	O1	R	PA	PB	V	S	T	U	PC	Y
25	15 to 100	M8 x 1.25	24	17	14.5	34	M5 x 0.8	8	15.4	8.2	40	45	46.5	1.5	15.9	71.5
	101 to 400															
32	20 to 100	M8 x 1.25	31	22	18.5	40	M6 x 1.0	10	15.4	8.2	60	60	61	1	15.9	87
	101 to 500															

Body Bottom Tapped

[mm]

Size	Stroke range [mm]	MA	MC	MD	MH	ML	MO	MR	XA	XB
25	15 to 39	20	24	32	29	50	M5 x 0.8	6.5	4	5
	40 to 100		42	41						
	101 to 124					75				
	125 to 200		59	49.5						
	201 to 400		76	58						
32	20 to 39	25	22	36	30	50	M6 x 1	8.5	5	6
	40 to 100		36	43						
	101 to 124					80				
	125 to 200		53	51.5						
	201 to 500		70	60						

∗1 Range within which the rod can move
Make sure workpieces mounted on the rod do not interfere with the workpieces and facilities around the rod.
∗2 The direction of rod end width across flats (□K) differs depending on the products.
∗3 The vent hole is the port for releasing to atmosphere. Do not apply pressure to this hole.
Attach tubing to the vent hole and place the end of the tubing so it is not exposed to dust or water.

For the rod end male thread, refer to page 77. For the mounting bracket dimensions, refer to page 97.

LEY-X5 Series
Auto Switch Mounting

Proper Auto Switch Mounting Position

Applicable auto switches: D-M9□A(V)

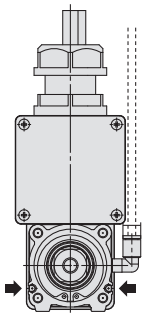

LEY25, 32

➡ Auto switch groove

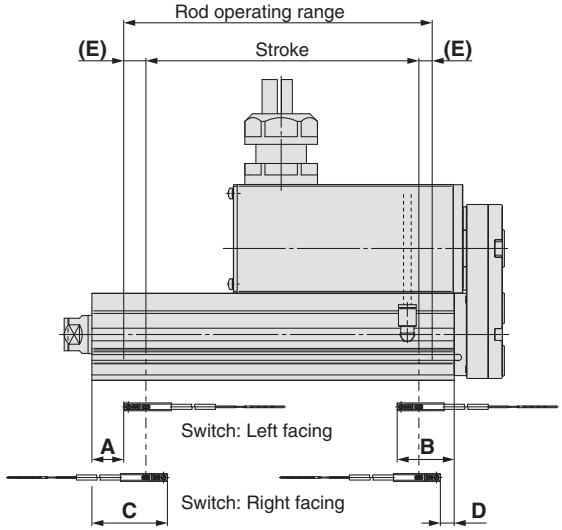

[mm]

Size	Stroke range	Auto switch position				Return to origin distance	Operating range
		Mounting: Left facing		Mounting: Right facing			
		A	B	C	D	E	—
25	15 to 100	27	62.5	39	50.5	(2)	4.2
	105 to 400	52		64			
32	20 to 100	30.5	85.5	42.5	53.5	(2)	4.9
	105 to 500	90.5		102.5			

∗1 Figures in the table above are used as a reference when mounting the auto switches for stroke end detection. Adjust the auto switch after confirming the operating condition in the actual setting.
∗2 Switches cannot be mounted on the motor mounting side surface.
∗3 For the LEYG with a guide, switches cannot be mounted on the guide attachment side (rod side).
∗4 Since the operating range is provided as a guideline including hysteresis, it cannot be guaranteed (assuming approximately ±30 % dispersion). It may change substantially depending on the ambient environment.

Auto Switch Mounting

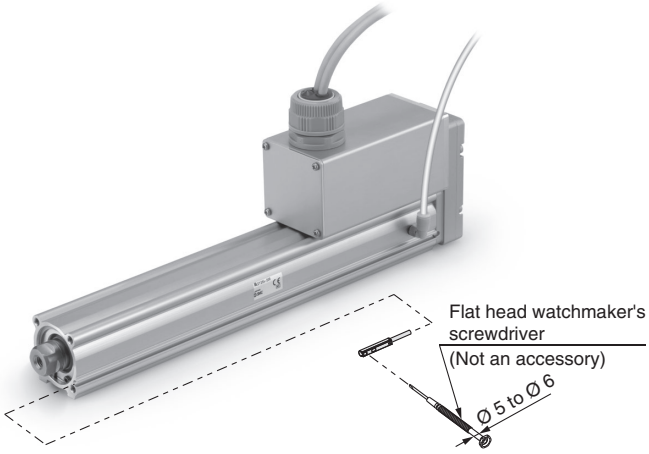

Auto Switch Mounting Screw Tightening Torque

[N·m]

Auto switch model	Tightening torque
D-M9□A(V)	0.05 to 0.10

∗ When tightening the auto switch mounting screw (included with auto switch), use a watchmaker's screwdriver with a handle diameter of about 5 to 6 mm.

Water Resistant 2-Colour Indicator
Solid State Auto Switch: Direct Mounting Type
D-M9NA(V)/D-M9PA(V)/D-M9BA(V)

Grommet

- **Water (coolant) resistant type**
- **2-wire load current is reduced (2.5 to 40 mA).**
- **The proper operating range can be determined by the colour of the light. (Red → Green ← Red)**
- **Using flexible cable as standard spec.**

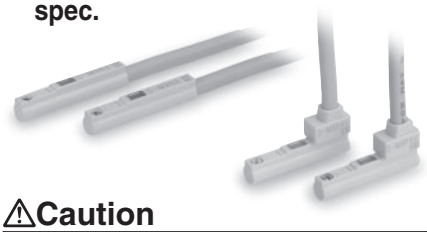

⚠Caution

Precautions

Fix the auto switch with the existing screw installed on the auto switch body. The auto switch may be damaged if a screw other than the one supplied is used.
Please consult with SMC if using coolant liquid other than water based solution.

Weight

[g]

Auto switch model		D-M9NA(V)	D-M9PA(V)	D-M9BA(V)
Lead wire length	0.5 m (—)	8	7	
	1 m (**M**)	14	13	
	3 m (**L**)	41	38	
	5 m (**Z**)	68	63	

Auto Switch Specifications

PLC: Programmable Logic Controller

D-M9□A, D-M9□AV (With indicator light)						
Auto switch model	D-M9NA	D-M9NAV	D-M9PA	D-M9PAV	D-M9BA	D-M9BAV
Electrical entry direction	In-line	Perpendicular	In-line	Perpendicular	In-line	Perpendicular
Wiring type	3-wire				2-wire	
Output type	NPN		PNP		—	
Applicable load	IC circuit, Relay, PLC				24 VDC relay, PLC	
Power supply voltage	5, 12, 24 VDC (4.5 to 28 V)				—	
Current consumption	10 mA or less				—	
Load voltage	28 VDC or less		—		24 VDC (10 to 28 VDC)	
Load current	40 mA or less				2.5 to 40 mA	
Internal voltage drop	0.8 V or less at 10 mA (2 V or less at 40 mA)				4 V or less	
Leakage current	100 μA or less at 24 VDC				0.8 mA or less	
Indicator light	Operating range ····· Red LED illuminates. Proper operating range ····· Green LED illuminates.					
Standard	CE marking (EMC directive/RoHS directive)					

Oilproof Flexible Heavy-duty Lead Wire Specifications

Auto switch model		D-M9NA□	D-M9NAV□	D-M9PA□	D-M9PAV□	D-M9BA□	D-M9BAV□
Sheath	Outside diameter [mm]	2.6					
Insulator	Number of cores	3 cores (Brown/Blue/Black)				2 cores (Brown/Blue)	
	Outside diameter [mm]	0.88					
Conductor	Effective area [mm²]	0.15					
	Strand diameter [mm]	0.05					
Minimum bending radius [mm]		17					

∗ Refer to the **Web Catalogue** for solid state auto switch common specifications.
∗ Refer to the **Web Catalogue** for lead wire lengths.

Dimensions

[mm]

D-M9□A

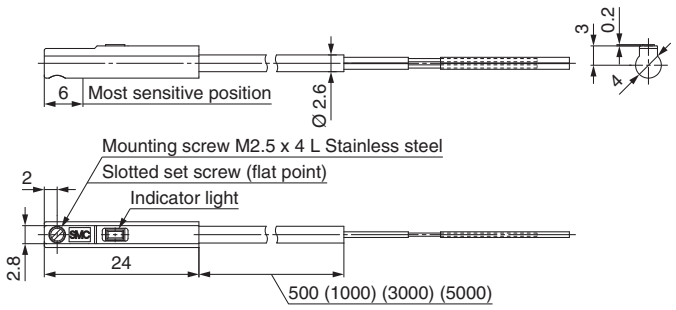

D-M9□AV

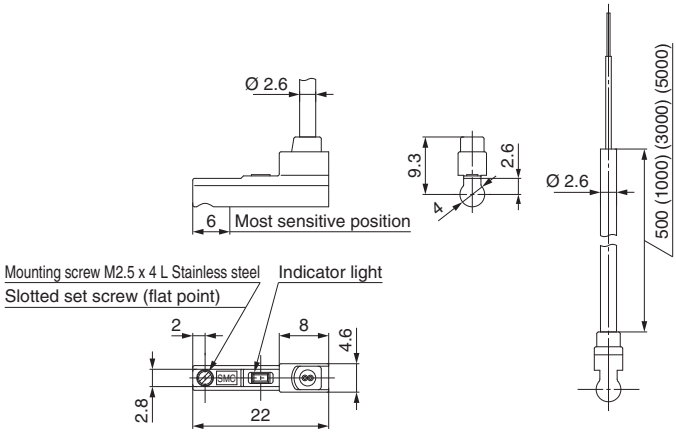

Step Motor (Servo/24 VDC) Servo Motor (24 VDC)

Electric Actuator/ Rod Type

Secondary Battery Compatible

25A-LEY Series LEY16, 25, 32, 40

RoHS

Dust -tight/Water-jet-proof ▸p. 151

How to Order

Motor mounting position: Top/Parallel Motor mounting position: In-line

25A-LEY 16 □ □ B - 30 □ □ □ - S1

Series compatible with secondary batteries

❶ ❷ ❸ ❹ ❺ ❻ ❼ ❽ ❾

LEC□ Series 6P 1 □

JXC□ Series CD17T

❿ ⓫ ⓬

For details on controllers, refer to page 178.

❶ Size

16
25
32
40

❷ Motor mounting position

—	Top mounting
R	Right side parallel
L	Left side parallel
D	In-line

❸ Motor type

Symbol	Type	Applicable size			Compatible controller/driver
		LEY16	LEY25	LEY32/40	
—	Step motor (Servo/24 VDC)	●	●	●	LECP1 LECPA JXCE1 JXC91 JXCP1 JXCD1 JXCL1
A	Servo motor (24 VDC)	●	●	—	LECA6

❹ Lead [mm]

Symbol	LEY16	LEY25	LEY32/40
A	10	12	16
B	5	6	8
C	2.5	3	4

❺ Stroke [mm]

30	30
to	to
500	500

* For details, refer to the applicable stroke table below.

❻ Motor option*2

—	Without option
C	With motor cover
W	With lock/motor cover

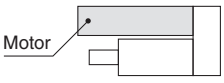

❼ Rod end thread

—	Rod end female thread
M	Rod end male thread (1 rod end nut is included.)

❽ Mounting*5

Symbol	Type	Motor mounting position	
		Top/Parallel	In-line
—	Ends tapped/Body bottom tapped*6	●	●
L	Foot	●	—
F	Rod flange*6	●*8	●
G	Head flange*6	●*9	—
D	Double clevis*7	●	—

❾ Actuator cable type/length*11

Standard cable [m]

—	None
S1	1.5*12
S3	3*12
S5	5*12

Robotic cable [m]

R1	1.5	RA	10*10
R3	3	RB	15*10
R5	5	RC	20*10
R8	8*10		

Mounting Bracket Part Nos. for the 25A- Series*4

Applicable size	Foot*3	Flange	Double clevis
16	25-LEY-L016	25-LEY-F016	25-LEY-D016
25	25-LEY-L025	25-LEY-F025	25-LEY-D025
32, 40	25-LEY-L032	25-LEY-F032	25-LEY-D032
Surface treatment	RAYDENT®	RAYDENT®	Coating (Size 16: Electroless nickel plating)

Solid state auto switches should be ordered separately. For details on auto switches, refer to the Web Catalogue.

Applicable auto switches

D-M9N(V)-900, D-M9P(V)-900, D-M9B(V)-900
D-M9NW(V)-900, D-M9PW(V)-900, D-M9BW(V)-900

Applicable Stroke Table*1

●: Standard

Model \ Stroke [mm]	30	50	100	150	200	250	300	350	400	450	500	Manufacturable stroke range
25A-LEY16	●	●	●	●	●	●	●	—	—	—	—	10 to 300
25A-LEY25	●	●	●	●	●	●	●	●	●	—	—	15 to 400
25A-LEY32/40	●	●	●	●	●	●	●	●	●	●	●	20 to 500

SMC

LEC□ Series (For details, refer to page 179.)

6P 1 □
⑩ ⑪ ⑫

⑩ Controller/Driver type*12

—	Without controller/driver	
6N	**LECA6** (Step data input type)	NPN
6P		PNP
1N	**LECP1***13 (Programless type)	NPN
1P		PNP
AN	**LECPA***13 *15 (Pulse input type)	NPN
AP		PNP

⑪ I/O cable length*16, Communication plug

—	Without cable (Without communication plug connector)
1	1.5 m
3	3 m*17
5	5 m*17
S	Straight type communication plug connector
T	T-branch type communication plug connector

⑫ Controller/Driver mounting

—	Screw mounting
D	DIN rail*18

JXC□ Series (For details, refer to page 179.)

⑩ Controller

—	Without controller
C□1□□	With controller

C D 1 7 T

Communication protocol

E	EtherCAT®
9	EtherNet/IP™
P	PROFINET
D	DeviceNet™
L	IO-Link

For single axis

Mounting

7	Screw mounting
8*18	DIN rail

Communication plug connector for DeviceNet™*19

—	Without plug connector
S	Straight type
T	T-branch type

*1 Please consult with SMC for non-standard strokes as they are produced as special orders.
*2 When "With lock" or "With lock/motor cover" is selected for the top mounting and right/left side parallel types, the motor body will stick out from the end of the body for size 16/40 with strokes of 30 mm or less. Check for interference with workpieces before selecting a model.
*3 When ordering foot brackets, order 2 pieces per actuator.
*4 Parts belonging to each bracket are as follows.
Foot, Flange: Body mounting bolt, Double clevis: Clevis pin, Type C retaining ring for axis, Body mounting bolt
*5 The mounting bracket is shipped together with the product but does not come assembled.
*6 For the horizontal cantilever mounting of the rod flange, head flange, or ends tapped types, use the actuator within the following stroke range.
·LEY25: 200 mm or less ·LEY32/40: 100 mm or less
*7 For the mounting of the double clevis type, use the actuator within the following stroke range.
·LEY16: 100 mm or less ·LEY25: 200 mm or less ·LEY32/40: 200 mm or less
*8 The rod flange type is not available for the LEY16/40 with a 30 mm stroke and motor option "With lock," "With lock/motor cover."
*9 The head flange type is not available for the LEY32/40.
*10 Produced upon receipt of order (Robotic cable only)
*11 The standard cable should only be used on fixed parts.
For use on moving parts, select the robotic cable.
*12 For details on controllers/drivers and compatible motors, refer to the compatible controller/driver on the next page.
*13 Only available for the motor type "Step motor"
*14 Not compliant with CE
*15 When pulse signals are open collector, order the current limiting resistor (LEC-PA-R-□) on page 220 separately.
*16 When "Without controller/driver" is selected for controller/driver types, I/O cable cannot be selected. Refer to page 199 (For LECA6), page 213(For LECP1), or page 220 (For LECPA) if I/O cable is required.
*17 When "Pulse input type" is selected for controller/driver types, pulse input usable only with differential. Only 1.5 m cables usable with open collector
*18 The DIN rail is not included. Order it separately.
*19 Select "—" for anything other than DeviceNet™.

⚠Caution

[CE-compliant products]

① EMC compliance was tested by combining the electric actuator LEY series and the controller LEC/JXC series.
The EMC depends on the configuration of the customer's control panel and the relationship with other electrical equipment and wiring. Therefore, compliance with the EMC directive cannot be certified for SMC components incorporated into the customer's equipment under actual operating conditions. As a result, it is necessary for the customer to verify compliance with the EMC directive for the machinery and equipment as a whole.

② For the servo motor (24 VDC) specification, EMC compliance was tested by installing a noise filter set (LEC-NFA). Refer to page 199 for the noise filter set. Refer to the LECA series Operation Manual for installation.

[UL-compliant products (For the LEC series)]

When compliance with UL is required, the electric actuator and controller/driver should be used with a UL1310 Class 2 power supply.

The actuator and controller/driver are sold as a package.

Confirm that the combination of the controller/driver and actuator is correct.

<Check the following before use.>

① Check the actuator label for the model number (after "25A-").
This number should match that of the controller/driver.

② Check that the Parallel I/O configuration matches (NPN or PNP).

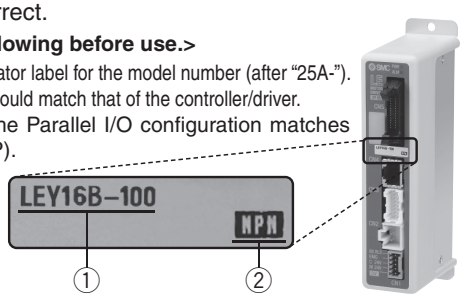

* Refer to the Operation Manual for using the products. Please download it via our website, https://www.smc.eu

25A-LEY Series

Step Motor (Servo/24 VDC) Servo Motor (24 VDC) Secondary Battery Compatible

Compatible Controller/Driver

LEC□ Series

Type	Step data input type	Programless type	Pulse input type
Series	**LECA6**	**LECP1**	**LECPA**
Features	Value (Step data) input Standard controller	Capable of setting up operation (step data) without using a PC or teaching box	Operation by pulse signals
Compatible motor	Servo motor (24 VDC)	Step motor (Servo/24 VDC)	
Max. number of step data	64 points	14 points	—
Power supply voltage			
Reference page	191	207	214

JXC□ Series

Type	EtherCAT® direct input type	EtherNet/IP™ direct input type	PROFINET direct input type	DeviceNet™ direct input type	IO-Link direct input type
Series	**JXCE1**	**JXC91**	**JXCP1**	**JXCD1**	**JXCL1**
Features	EtherCAT® direct input	EtherNet/IP™ direct input	PROFINET direct input	DeviceNet™ direct input	IO-Link direct input
Compatible motor	Step motor (Servo/24 VDC)				
Max. number of step data	64 points				
Power supply voltage	24 VDC				
Reference page	224				

Electric Actuator/ Rod Type

Secondary Battery Compatible

25A-LEY Series LEY25, 32

Size 25, 32

∗ Refer to the table below.

RoHS

LECY□ Series ▶ p. 183

Refer to page 41 for model selection.

How to Order

25A-LEY **H** **25** **□** **S2** **B** – **100** **□** **□** **□** – **S** **2** **A1** **□**

❶ ❷ ❸ ❹ ❺ ❻ ❼ ❽ ❾ ❿ ⓫ ⓬ ⓭

Series compatible with secondary batteries

❶ Accuracy

—	Basic type
H	High-precision type

❷ Size

25
32

❸ Motor mounting position

—	Top mounting
R	Right side parallel
L	Left side parallel
D	In-line

❹ Motor type

Symbol	Type	Output [W]	Actuator size	Compatible driver∗3	UL-compliant
S2∗1	AC servo motor (Incremental encoder)	100	25	LECSA□-S1	—
S3		200	32	LECSA□-S3	—
S6∗1	AC servo motor (Absolute encoder)	100	25	LECSB□-S5 LECSC□-S5 LECSS□-S5	—
S7		200	32	LECSB□-S7 LECSC□-S7 LECSS□-S7	—
T6∗2	AC servo motor (Absolute encoder)	100	25	LECSS2-T5	●
T7		200	32	LECSS2-T7	●

∗1 For motor type S2 and S6, the compatible driver part number suffixes are S1 and S5 respectively.
∗2 For motor type T6, the compatible driver part number suffix is T5.
∗3 For details on the driver, refer to the **Web Catalogue**.

❺ Lead [mm]

Symbol	LEY25	LEY32∗1
A	12	16 (20)
B	6	8 (10)
C	3	4 (5)

∗1 The values shown in ( ) are the leads for the size 32 top mounting, right/left side parallel types. (Equivalent leads which include the pulley ratio [1.25:1])

❻ Stroke [mm]

30	30
to	to
500	500

∗ For details, refer to the applicable stroke table below.

❼ Motor option

—	Without option
B	With lock∗1

∗1 When "With lock" is selected for the top mounting and right/left side parallel types, the motor body will stick out from the end of the body for size 25 with strokes of 30 mm or less. Check for interference with workpieces before selecting a model.

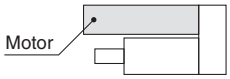

❽ Rod end thread

—	Rod end female thread
M	Rod end male thread (1 rod end nut is included.)

❾ Mounting∗1

Symbol	Type	Motor mounting position: Top/Parallel	Motor mounting position: In-line
—	Ends tapped/ Body bottom tapped∗2	●	●
L	Foot	●	—
F	Rod flange∗2	●∗4	●
G	Head flange∗2	●∗5	—
D	Double clevis∗3	●	—

∗1 The mounting bracket is shipped together with the product but does not come assembled.
∗2 For the horizontal cantilever mounting of the rod flange, head flange, or ends tapped types, use the actuator within the following stroke range.
· 25A-LEY25: 200 mm or less
· 25A-LEY32: 100 mm or less
∗3 For the mounting of the double clevis type, use the actuator within the following stroke range.
· 25A-LEY25: 200 mm or less
· 25A-LEY32: 200 mm or less
∗4 The rod flange type is not available for the 25A-LEY25 with a 30 mm stroke and motor option "With lock."
∗5 The head flange type is not available for the 25A-LEY32.

Mounting Bracket Part Nos. for the 25A- Series

Applicable size	Foot∗1	Flange	Double clevis
25	25-LEY-L025	25-LEY-F025	25-LEY-D025
32	25-LEY-L032	25-LEY-F032	25-LEY-D032
Surface treatment	RAYDENT®	RAYDENT®	Coating (Size 16: Electroless nickel plating)

∗1 When ordering foot brackets, order 2 pieces per actuator.
∗ Parts belonging to each bracket are as follows.
Foot, Flange: Body mounting bolt, Double clevis: Clevis pin, Type C retaining ring for axis, Body mounting bolt

Applicable Stroke Table

●: Standard

Model \ Stroke [mm]	30	50	100	150	200	250	300	350	400	450	500	Manufacturable stroke range [mm]
25A-LEY25	●	●	●	●	●	●	●	●	●	—	—	15 to 400
25A-LEY32	●	●	●	●	●	●	●	●	●	●	●	20 to 500

∗ Please consult with SMC for non-standard strokes as they are produced as special orders.

Solid state auto switches should be ordered separately. For details on auto switches, refer to the Web Catalogue.

Applicable auto switches
D-M9N(V)-900, D-M9P(V)-900, D-M9B(V)-900
D-M9NW(V)-900, D-M9PW(V)-900, D-M9BW(V)-900

SMC

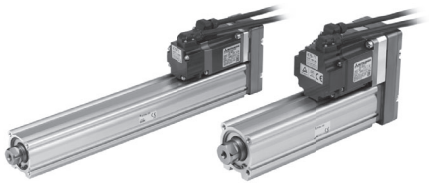

Motor mounting position: Top/Parallel

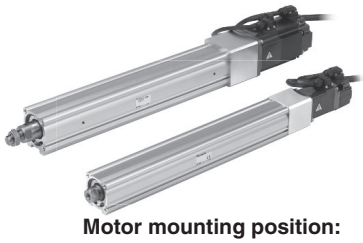

Motor mounting position: In-line

⑩ Cable type*1 *2

—	Without cable
S	Standard cable
R	Robotic cable (Flexible cable)

*1 The motor and encoder cables are included. (The lock cable is also included when the motor with lock option is selected.)
*2 Standard cable entry direction is
· Top/Parallel: (A) Axis side
· In-line: (B) Counter axis side

⑪ Cable length*1 [m]

—	Without cable
2	2
5	5
A	10

*1 The length of the encoder, motor, and lock cables are the same.

⑫ Driver type*1

	Compatible driver	Power supply voltage [V]	UL-compliant
—	Without driver	—	—
A1	LECSA1-S□	100 to 120	—
A2	LECSA2-S□	200 to 230	—
B1	LECSB1-S□	100 to 120	—
B2	LECSB2-S□	200 to 230	—
C1	LECSC1-S□	100 to 120	—
C2	LECSC2-S□	200 to 230	—
S1	LECSS1-S□	100 to 120	—
S2	LECSS2-S□	200 to 230	—
	LECSS2-T□	200 to 240	●

*1 When a driver type is selected, a cable is included. Select the cable type and cable length.
Example)
S2S2: Standard cable (2 m) + Driver (LECSS2)
S2 : Standard cable (2 m)
— : Without cable and driver

⑬ I/O cable length [m]*1

—	Without cable
H	Without cable (Connector only)
1	1.5

*1 When "Without driver" is selected for driver type, only "—: Without cable" can be selected.
Refer to page 265 if I/O cable is required.

∗ The 25A- series specifications and dimensions are the same as those of the standard model.

Compatible Driver

Driver type	Pulse input type/ Positioning type	Pulse input type	CC-Link direct input type	SSCNETⅢ type	SSCNETⅢ/H type
Series	**LECSA**	**LECSB**	**LECSC**	**LECSS**	**LECSS-T**
Number of point tables	Up to 7	—	Up to 255 (2 stations occupied)	—	—
Pulse input	○	○	—	—	—
Applicable network	—	—	CC-Link	SSCNETⅢ	SSCNETⅢ/H
Control encoder	Incremental 17-bit encoder	Absolute 18-bit encoder	Absolute 18-bit encoder	Absolute 18-bit encoder	Absolute 22-bit encoder
Communication function	USB communication	USB communication, RS422 communication		USB communication	
Power supply voltage [V]	100 to 120 VAC (50/60 Hz), 200 to 230 VAC (50/60 Hz)				200 to 240 VAC (50/60 Hz)
Reference page	246				

∗ Copper and zinc materials are used for the motors, cables, controllers/drivers.

Electric Actuator/ Rod Type

Secondary Battery Compatible

25A-LEY Series LEY25, 32

Size 25, 32

RoHS

LECS□ Series ▶p. 181

Refer to page 48 for model selection.

How to Order

25A-LEY **H** **25** **□** **V6** **B** – **100** **□** **□** **□** – **S** **2** **M2** **□**

❶ ❷ ❸ ❹ ❺ ❻ ❼ ❽ ❾ ❿ ⓫ ⓬ ⓭

Series compatible with secondary batteries

❶ Accuracy

—	Basic type
H	High-precision type

❷ Size

25
32

❸ Motor mounting position

—	Top mounting
R	Right side parallel
L	Left side parallel
D	In-line

❹ Motor type

Symbol	Type	Output [W]	Size	Compatible driver
V6*1	AC servo motor (Absolute encoder)	100	25	LECYM2-V5 LECYU2-V5
V7		200	32	LECYM2-V7 LECYU2-V7

*1 For motor type V6, the compatible driver part number suffix is V5.

❺ Lead [mm]

Symbol	25A-LEY25	25A-LEY32*1
A	12	16 (20)
B	6	8 (10)
C	3	4 (5)

*1 The values shown in ( ) are the leads for the size 32 top mounting, right/left side parallel types. (Equivalent leads which include the pulley ratio [1.25:1])

❻ Stroke [mm]

30	30
to	to
500	500

* For details, refer to the applicable stroke table below.

❼ Motor option

—	Without option
B	With lock*1

*1 When "With lock" is selected for the top mounting and right/left side parallel types, the motor body will stick out from the end of the body for size 25 with strokes of 30 mm or less. Check for interference with workpieces before selecting a model.

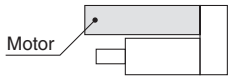

❽ Rod end thread

—	Rod end female thread
M	Rod end male thread (1 rod end nut is included.)

❾ Mounting*1

Symbol	Type	Motor mounting position	
		Top/Parallel	In-line
—	Ends tapped/ Body bottom tapped*2	●	●
L	Foot	●	—
F	Rod flange*2	●*4	●
G	Head flange*2	●*5	—
D	Double clevis*3	●	—

*1 The mounting bracket is shipped together with the product but does not come assembled.
*2 For the horizontal cantilever mounting of the rod flange, head flange, or ends tapped types, use the actuator within the following stroke range.
· LEY25: 200 mm or less · LEY32: 100 mm or less
*3 For the mounting of the double clevis type, use the actuator within the following stroke range.
· LEY25: 200 mm or less · LEY32: 200 mm or less
*4 The rod flange type is not available for the LEY25 with a 30 mm stroke and motor option "With lock."
*5 The head flange type is not available for the LEY32.

Mounting Bracket Part Nos. for the 25A- Series

Applicable size	Foot*1	Flange	Double clevis
25	25-LEY-L025	25-LEY-F025	25-LEY-D025
32	25-LEY-L032	25-LEY-F032	25-LEY-D032
Surface treatment	RAYDENT®	RAYDENT®	Coating (Size 16: Electroless nickel plating)

*1 When ordering foot brackets, order 2 pieces per actuator.
* Parts belonging to each bracket are as follows.
Foot, Flange: Body mounting bolt, Double clevis: Clevis pin, Type C retaining ring for axis, Body mounting bolt

Solid state auto switches should be ordered separately.
For details on auto switches, refer to the Web Catalogue**.**

Applicable auto switches
D-M9N(V)-900, D-M9P(V)-900, D-M9B(V)-900
D-M9NW(V)-900, D-M9PW(V)-900, D-M9BW(V)-900

Applicable Stroke Table

●: Standard

Model \ Stroke [mm]	30	50	100	150	200	250	300	350	400	450	500	Manufacturable stroke range [mm]
25A-LEY25	●	●	●	●	●	●	●	●	●	—	—	15 to 400
25A-LEY32	●	●	●	●	●	●	●	●	●	●	●	20 to 500

* Please consult with SMC for non-standard strokes as they are produced as special orders.

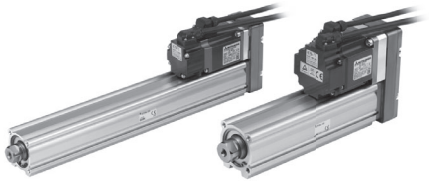

Motor mounting position: Top/Parallel

Motor mounting position: In-line

⑩ Cable type*1 *2

—	Without cable
S	Standard cable
R	Robotic cable (Flexible cable)

*1 The motor and encoder cables are included. (The lock cable is also included when the motor with lock option is selected.)
*2 Standard cable entry direction is
· Top/Parallel: (A) Axis side
· In-line: (B) Counter axis side

⑪ Cable length [m]*1

—	Without cable
3	3
5	5
A	10
C	20

*1 The length of the motor and encoder cables are the same. (For with lock)

⑫ Driver type

	Compatible driver	Power supply voltage [V]
—	Without driver	—
M2	LECYM2-V□	200 to 230
U2	LECYU2-V□	200 to 230

* When a driver type is selected, a cable is included. Select the cable type and cable length.

⑬ I/O cable length [m]*1

—	Without cable
H	Without cable (Connector only)
1	1.5

*1 When "Without driver" is selected for driver type, only "—: Without cable" can be selected. Refer to page 278 if I/O cable is required.

* The 25A- series specifications and dimensions are the same as those of the standard model.

Compatible Driver

Driver type	MECHATROLINK-Ⅱ type	MECHATROLINK-Ⅲ type
Series	**LECYM**	**LECYU**
Applicable network	MECHATROLINK-Ⅱ	MECHATROLINK-Ⅲ
Control encoder	Absolute 20-bit encoder	
Communication device	USB communication, RS-422 communication	
Power supply voltage [V]	200 to 230 VAC (50/60 Hz)	
Reference page	271	

* Copper and zinc materials are used for the motors, cables, controllers/drivers.

LEY/LEYG Series
Electric Actuators
Specific Product Precautions 1

Be sure to read this before handling the products. Refer to the back cover for safety instructions. For electric actuator and auto switch precautions, refer to the "Handling Precautions for SMC Products" and the "Operation Manual" on the SMC website: https://www.smc.eu

Design/Selection

⚠Warning

1. Do not apply a load in excess of the specification limits.

Select a suitable actuator by work load and allowable lateral load on the rod end. If a load in excess of the specification limits is applied to the piston rod, the generation of play in the piston rod sliding parts, reduced accuracy, etc., may occur and adversely affect the operation and service life of the product.

2. Do not use the product in applications where excessive external force or impact force is applied to it.

This can cause a malfunction.

3. When used as a stopper, select the LEYG series "Sliding bearing" for strokes of 30 mm or less.

4. When used as a stopper, fix the main body with a guide attachment ("Top mounting" or "Bottom mounting").

If the end of the actuator is used to fix the main body (end mounting), the excessive load acts on the actuator, which may adversely affect the operation and service life of the product.

Handling

⚠Caution

1. INP output signal

1) Positioning operation
When the product comes within the set range of the step data [In position], the INP output signal will turn ON.
Initial value: Set to [0.50] or higher.

2) Pushing operation
When the effective force exceeds the step data [Trigger LV], the INP output signal will turn ON.
Use the product within the specified range of the [Pushing force] and [Trigger LV].

a) To ensure that the actuator pushes the workpieces with the set [Pushing force], it is recommended that the [Trigger LV] be set to the same value as the [Pushing force].

b) When the [Pushing force] and the [Trigger LV] are set below the specified range, the INP output signal will turn ON from the pushing start position.

<Limit Values for Pushing Force and Trigger Level in Relation to Pushing Speed>
Without Load

Model	Lead	Pushing speed [mm/s]	Pushing force (Setting input value)
LEY□16□	A/B/C	21 to 50	60 to 85 %
LEY□25□	A/B/C	21 to 35	50 to 65 %
LEY□32□	A	24 to 30	60 to 85 %
	B/C	21 to 30	
LEY□40□	A	24 to 30	50 to 65 %
	B/C	21 to 30	

Model	Lead	Pushing speed [mm/s]	Pushing force (Setting input value)
LEY□16□A	A/B/C	21 to 50	80 to 95 %
LEY□25□A	A/B/C	21 to 35	80 to 95 %

There is a limit to the pushing force in relation to the pushing speed. If the product is operated outside of the range (low pushing force), the completion signal [INP] may be output before the pushing operation has been completed (during the moving operation).
If operating with the pushing speed below the min. speed, please check for operating problems before using the product.

Handling

⚠Caution

<Set Values for Vertical Upward Transfer Pushing Operations>
For vertical loads (upward), set the pushing force to the max. value shown below and operate at the work load or less.

Model	LEY16□			LEY25□			LEY32□			LEY40□		
Lead	A	B	C	A	B	C	A	B	C	A	B	C
Work load [kg]	1	1.5	3	2.5	5	10	4.5	9	18	7	14	28
Pushing force	85 %			65 %			85 %			65 %		

Model	LEY16□A			LEY25□A		
Lead	A	B	C	A	B	C
Work load [kg]	1	1.5	3	1.2	2.5	5
Pushing force	95 %			95 %		

Model	LEYG16$^{M}_{L}$□			LEYG25$^{M}_{L}$□			LEYG32$^{M}_{L}$□			LEYG40$^{M}_{L}$□		
Lead	A	B	C	A	B	C	A	B	C	A	B	C
Work load [kg]	0.5	1	2.5	1.5	4	9	2.5	7	16	5	12	26
Pushing force	85 %			65 %			85 %			65 %		

Model	LEYG16$^{M}_{L}$□A			LEYG25$^{M}_{L}$□A		
Lead	A	B	C	A	B	C
Work load [kg]	0.5	1	2.5	0.5	1.5	4
Pushing force	95 %			95 %		

2. To conduct a pushing operation, be sure to set the product to [Pushing operation].

Also, refrain from bumping the workpiece during a positioning operation or when in the range of the positioning operation. Failure to do so may result in a malfunction.

3. Use the product within the specified pushing speed range for the pushing operation.

Failure to do so may result in damage or malfunction.

4. The moving force should be the initial value (LEY16□/25□/32□/40□: 100 %, LEY16A□: 150 %, and LEY25A□: 200 %).

If the moving force is set below the initial value, it may cause the generation of an alarm.

5. The actual speed of this actuator is affected by the load.

Check the model selection section of the catalogue.

6. Do not apply a load, impact, or resistance in addition to the transferred load during return to origin.

Additional force will cause the displacement of the origin position since it is based on the detected motor torque.

7. For pushing operations, set the product to a position at least 2 mm away from a workpiece. (This position is referred to as the pushing start position.)

The following alarms may be generated and operation may become unstable if setting is not done correctly.

a. "Posn failed"
The product cannot reach the pushing start position due to variations in the target positions.

b. "Pushing ALM"
The product is pushed back from the pushing start position after starting to push.

Be sure to read this before handling the products. Refer to the back cover for safety instructions. For electric actuator and auto switch precautions, refer to the "Handling Precautions for SMC Products" and the "Operation Manual" on the SMC website: https://www.smc.eu

Handling

⚠Caution

8. Do not scratch or dent the sliding parts of the piston rod by bumping them or placing objects on them.

The piston rod and guide rod are manufactured to precise tolerances, so even a slight deformation may cause a malfunction.

9. When an external guide is used, connect it in such a way that no impact or load is applied to it.

Use a freely moving connector (such as a floating joint).

10. Do not operate by fixing the piston rod and moving the actuator body.

Excessive load will be applied to the piston rod, resulting in damage to the actuator and a reduced service life of the product.

11. When an actuator is operated with one end fixed and the other free (ends tapped or flange), a bending moment may act on the actuator due to vibration generated at the stroke end, which can damage the actuator. In such cases, install a mounting bracket to suppress the vibration of the actuator body or reduce the speed so that the actuator does not vibrate at the stroke end.

Also, use a mounting bracket when moving the actuator body or when a long stroke actuator is mounted horizontally and fixed at one end.

12. Avoid using the electric actuator in such a way that rotational torque would be applied to the piston rod.

This may cause the deformation of the non-rotating guide, abnormal auto switch responses, play in the internal guide, or an increase in the sliding resistance.

Refer to the table below for the approximate values of the allowable range of rotational torque.

Allowable rotational torque [N·m] or less	LEY16□□	LEY25□□	LEY32/40□□	LEY63
	0.8	1.1	1.4	2.8

When screwing a bracket or nut into the piston rod end, hold the flats of the end of the "socket" with a wrench (the piston rod should be fully retracted). Do not apply tightening torque to the non-rotating mechanism.

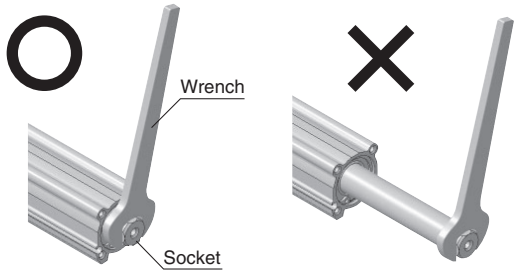

13. When rotational torque is applied to the end of the plate, use it within the allowable range. [LEYG series]

Failure to do so may cause the deformation of the guide rod and bushing, play in the guide, or an increase in the sliding resistance.

14. For pushing operations, use the product within the duty ratio range below.

The duty ratio is the fraction of time that the product can keep pushing.

• Step motor (Servo/24 VDC)

LEY16□

Pushing force [%]	Ambient temperature: 25 °C or less		Ambient temperature: 40 °C	
	Duty ratio [%]	Continuous pushing time [minute]	Duty ratio [%]	Continuous pushing time [minute]
40 or less	100	—	100	—
50			70	12
70			20	1.3
85			15	0.8

LEY25□/40□

Pushing force [%]	Ambient temperature: 25 °C or less		Ambient temperature: 40 °C	
	Duty ratio [%]	Continuous pushing time [minute]	Duty ratio [%]	Continuous pushing time [minute]
65 or less	100	—	100	—

LEY32□

Pushing force [%]	Ambient temperature: 25 °C or less		Ambient temperature: 40 °C	
	Duty ratio [%]	Continuous pushing time [minute]	Duty ratio [%]	Continuous pushing time [minute]
65 or less	100	—	100	—
85			50	15

• Servo motor (24 VDC)

LEY16A□

Pushing force [%]	Ambient temperature: 25 °C or less		Ambient temperature: 40 °C	
	Duty ratio [%]	Continuous pushing time [minute]	Duty ratio [%]	Continuous pushing time [minute]
95 or less	100	—	100	—

LEY25A□

Pushing force [%]	Ambient temperature: 25 °C or less		Ambient temperature: 40 °C	
	Duty ratio [%]	Continuous pushing time [minute]	Duty ratio [%]	Continuous pushing time [minute]
95 or less	100	—	100	—

15. When mounting the product, secure a space of 40 mm or more to allow for bends in the cable.

* Failure to do so may result in cable breakage.

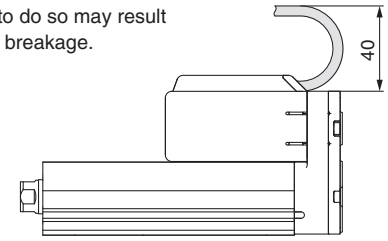

16. When mounting a bolt, workpiece, or jig, hold the flats of the piston rod end with a wrench so that the piston rod does not rotate. The bolt should be tightened within the specified torque range.

Failure to do so may cause abnormal auto switch responses, play in the internal guide, or an increase in the sliding resistance.

Be sure to read this before handling the products. Refer to the back cover for safety instructions. For electric actuator and auto switch precautions, refer to the "Handling Precautions for SMC Products" and the "Operation Manual" on the SMC website: https://www.smc.eu

Handling

⚠Caution

17. When mounting the product and/or a workpiece, tighten the mounting screws within the specified torque range.

Tightening the screws with a higher torque than recommended may cause a malfunction, while tightening with a lower torque can cause the displacement of the mounting position or, in extreme conditions, the actuator could become detached from its mounting position.

<LEY series>

Workpiece fixed/Rod end female thread

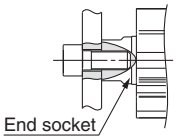

Model	Screw size	Max. tightening torque [N·m]	Max. screw-in depth [mm]	End socket width across flats [mm]
LEY16	M5 x 0.8	3.0	10	14
LEY25	M8 x 1.25	12.5	13	17
LEY32/40	M8 x 1.25	12.5	13	22
LEY63	M16 x 2	106	21	36

Workpiece fixed/Rod end male thread (When "Rod end male thread" is selected)

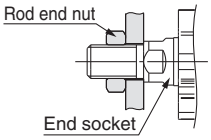

Model	Thread size	Max. tightening torque [N·m]	Effective thread length [mm]	End socket width across flats [mm]
LEY16	M8 x 1.25	12.5	12	14
LEY25	M14 x 1.5	65.0	20.5	17
LEY32/40	M14 x 1.5	65.0	20.5	22
LEY63	M18 x 1.5	97.0	26	36

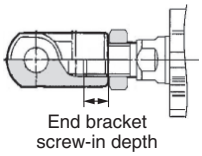

Model	Rod end nut		End bracket
	Width across flats [mm]	Length [mm]	screw-in depth [mm]
LEY16	13	5	5 or more
LEY25	22	8	8 or more
LEY32/40	22	8	8 or more
LEY63	27	11	18

∗ The rod end nut is an accessary.

Body fixed/Body bottom tapped type (When "Body bottom tapped" is selected)

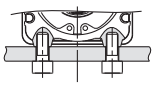

Model	Screw size	Max. tightening torque [N·m]	Max. screw-in depth [mm]
LEY16	M4 x 0.7	1.5	5.5
LEY25	M5 x 0.8	3.0	6.5
LEY32/40	M6 x 1.0	5.2	8.8
LEY63	M8 x 1.25	12.5	10

Body fixed/Rod side/Head side tapped type

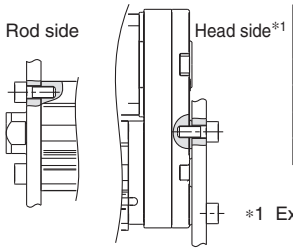

Model	Screw size	Max. tightening torque [N·m]	Max. screw-in depth [mm]
LEY16	M4 x 0.7	1.5	7
LEY25	M5 x 0.8	3.0	8
LEY32/40	M6 x 1.0	5.2	10
LEY63	M8 x 1.25	12.5	16

∗1 Excludes the LEY□D

<LEYG series>

Workpiece fixed/Plate tapped type

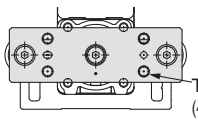

Model	Screw size	Max. tightening torque [N·m]	Max. screw-in depth [mm]
LEYG16$^{M}_{L}$	M5 x 0.8	3.0	8
LEYG25$^{M}_{L}$	M6 x 1.0	5.2	11
LEYG$^{32M}_{40L}$	M6 x 1.0	5.2	12

Body fixed/Top mounting

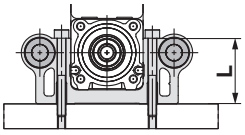

Model	Screw size	Max. tightening torque [N·m]	Length: L [mm]
LEYG16$^{M}_{L}$	M4 x 0.7	1.5	32
LEYG25$^{M}_{L}$	M5 x 0.8	3.0	40.3
LEYG$^{32M}_{40L}$	M5 x 0.8	3.0	50.3

Body fixed/Bottom mounting

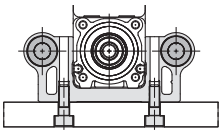

Model	Screw size	Max. tightening torque [N·m]	Max. screw-in depth [mm]
LEYG16$^{M}_{L}$	M5 x 0.8	3.0	10
LEYG25$^{M}_{L}$	M6 x 1.0	5.2	12
LEYG$^{32M}_{40L}$	M6 x 1.0	5.2	12

Body fixed/Head side tapped type

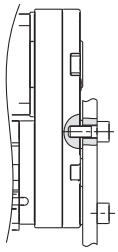

Model	Screw size	Max. tightening torque [N·m]	Max. screw-in depth [mm]
LEYG16$^{M}_{L}$	M4 x 0.7	1.5	7
LEYG25$^{M}_{L}$	M5 x 0.8	3.0	8
LEYG$^{32M}_{40L}$	M6 x 1.0	5.2	10

18. Keep the flatness of the mounting surface within the following ranges when mounting the actuator body and workpiece.

Mounting the product on an uneven workpiece or base may cause an increase in the sliding resistance.

Model	Mounting position	Flatness
LEY□	Body/Body bottom 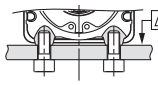	0.1 mm or less
LEYG□	Top mounting/Bottom mounting 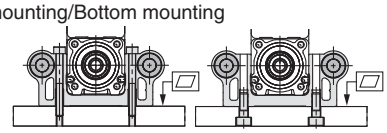	0.02 mm or less
	Workpiece/Plate mounting 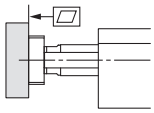	0.02 mm or less

19. When using auto switches with the guide rod type LEYG series, the following limits apply. Please consider the following before selecting the product.

- Auto switches must be inserted from the front side with the rod (plate) sticking out.
- Auto switches with perpendicular electrical entries cannot be used.
- Auto switches cannot be fixed with the parts hidden behind the guide attachment (the side of the rod that sticks out).
- Please consult with SMC when using auto switches on the side of the rod that sticks out.

Electric Actuators Specific Product Precautions 4

Be sure to read this before handling the products. Refer to the back cover for safety instructions. For electric actuator and auto switch precautions, refer to the "Handling Precautions for SMC Products" and the "Operation Manual" on the SMC website: https://www.smc.eu

Handling

⚠Caution

20. When using the product with the IP65 or equivalent specifications, be sure to mount the tubing to the vent hole, and then place the end of the tubing in an area where it is not exposed to dust or water. When the actuator is used without mounting the fitting and tubing to the vent hole, water or dust may enter the inside of the actuator, causing a malfunction.

21. When fluctuations in the load are caused during operation, malfunction, noise, or alarm generation may occur. (In the case of the AC servo motor)

The gain tuning may not be suitable for fluctuating loads.

Adjust the gain properly by following the instructions in the driver manual.

Enclosure

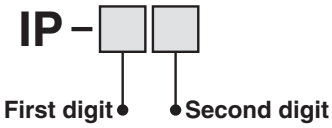

- **First Digit:**
  Degree of protection against solid foreign objects

0	Not protected
1	Protected against solid foreign objects of 50 mmØ and larger
2	Protected against solid foreign objects of 12 mmØ and larger
3	Protected against solid foreign objects of 2.5 mmØ and larger
4	Protected against solid foreign objects of 1.0 mmØ and larger
5	Dust protected
6	Dust-tight

- **Second Digit:**
  Degree of protection against water

0	Not protected	—
1	Protected against vertically falling water droplets	Dripproof type 1
2	Protected against vertically falling water droplets when enclosure is tilted up to 15°	Dripproof type 2
3	Protected against rainfall when enclosure is tilted up to 60°	Rainproof type
4	Protected against splashing water	Splashproof type
5	Protected against water jets	Water-jet-proof type
6	Protected against powerful water jets	Powerful water-jet-proof type
7	Protected against the effects of temporary immersion in water	Immersible type
8	Protected against the effects of continuous immersion in water	Submersible type

Example) IP65: Dust-tight, Water-jet-proof type
"Water-jet-proof" means that no water enters the equipment that could hinder it from operating normally when water is applied for 3 minutes in the prescribed manner. Take appropriate protective measures as the device is not usable in environments where droplets of water are splashed constantly.

Maintenance

⚠Warning

1. Ensure that the power supply is stopped and the workpiece is removed before starting maintenance work or replacing the product.

- **Maintenance frequency**
  Perform maintenance according to the table below.

Frequency	Appearance check	Belt check
Inspection before daily operation	○	—
Inspection every 6 months/ 250 km/5 million cycles*1	○	○

*1 Select whichever comes first.

- **Items for visual appearance check**
  1. Loose set screws, Abnormal amount of dirt, etc.
  2. Check for visible damage, Check of cable joint
  3. Vibration, Noise

- **Items for belt check**
  Stop operation immediately and replace the belt when any of the following occur. In addition, ensure your operating environment and conditions satisfy the requirements specified for the product.

  a. Tooth shape canvas is worn out
  Canvas fiber becomes fuzzy, Rubber is coming off and the fiber has become whitish, Lines of fibers have become unclear

  b. Peeling off or wearing of the side of the belt
  Belt corner has become rounded and frayed threads stick out

  c. Belt is partially cut
  Belt is partially cut, Foreign matter caught in the teeth of other parts is causing damage

  d. A vertical line on belt teeth is visible
  Damage which is made when the belt runs on the flange

  e. Rubber back of the belt is softened and sticky

  f. Cracks on the back of the belt are visible

Controller/Driver
LEC□/JXC□ Series

<Single Axis Controllers>

Step Data Input Type ..... p. 191

Servo Motor (24 VDC) LECA6 Series

Gateway Unit ..... p. 203

LEC-G Series

Programless Type ..... p. 207

Step Motor (Servo/24 VDC) LECP1 Series

Pulse Input Type ..... p. 214

Step Motor (Servo/24 VDC) LECPA Series

EtherCAT®/EtherNet/IP™/PROFINET/DeviceNet™/IO-Link Direct Input Type ..... p. 2224

JXC□ Series

EtherCAT®

EtherNet/IP™

PROFINET®

DeviceNet™

IO-Link

<Multi-Axis Controllers>

EtherNet/IP™ Direct Input Type ..... p. 233

For 3 axes **JXC92 Series**

Parallel I/O/EtherNet/IP™ Direct Input Type ..... p. 235

For 4 axes

JXC73 Series
JXC83 Series

JXC93 Series
EtherNet/IP™

Controller (Step Data Input Type)
Servo Motor (24 VDC)
LECA6 Series

LECA6 Series

How to Order

⚠Caution

[CE-compliant products]

① EMC compliance was tested by combining the electric actuator LE series and the controller LEC series.
The EMC depends on the configuration of the customer's control panel and the relationship with other electrical equipment and wiring. Therefore, compliance with the EMC directive cannot be certified for SMC components incorporated into the customer's equipment under actual operating conditions. As a result, it is necessary for the customer to verify compliance with the EMC directive for the machinery and equipment as a whole.

② For the LECA6 series (servo motor controller), EMC compliance was tested by installing a noise filter set (LEC-NFA). Refer to page 199 for the noise filter set. Refer to the LECA Operation Manual for installation.

[UL-compliant products]

When compliance with UL is required, the electric actuator and controller should be used with a UL1310 Class 2 power supply.

LE C A 6 P □ □ – □

Controller

Compatible motor

A	Servo motor (24 VDC)

Number of step data (Points)

6	64

Parallel I/O type

N	NPN
P	PNP

I/O cable length [m]

—	Without cable
1	1.5
3	3
5	5

Option

—	Screw mounting
D∗1	DIN rail mounting

∗1 The DIN rail is not included. Order it separately.

Actuator part number

	Without cable specifications and actuator options Example: Enter "LEY16B-100" for the LEY16B-100B-R16N1.
BC	Blank controller∗1

∗1 Requires dedicated software (LEC-BCW)

∗ When controller equipped type is selected when ordering the LE series, you do not need to order this controller.

The controller is sold as single unit after the compatible actuator is set.

Confirm that the combination of the controller and actuator is correct.

<Check the following before use.>

① Check the actuator label for the model number. This number should match that of the controller.

② Check that the Parallel I/O configuration matches (NPN or PNP).

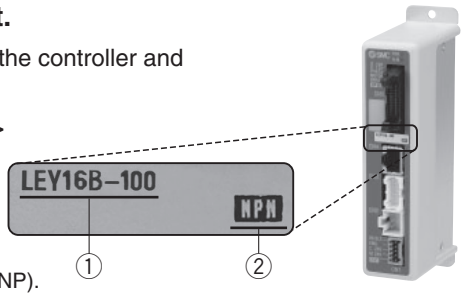

∗ Refer to the operation manual for using the products. Please download it via our website, https://www.smc.eu

Precautions for blank controllers (LEC□6□□-BC)

A blank controller is a controller to which the customer can write the data of the actuator it is to be combined and used with. Use the dedicated software (LEC-BCW) for data writing.

- Please download the dedicated software (LEC-BCW) via our website.
- Order the communication cable for controller setting (LEC-W2A-C) separately to use this software.

SMC website
https://www.smc.eu

Specifications

Basic Specifications

Item	LECA6	
Compatible motor	Servo motor (24 VDC)	
Power supply∗1	Power voltage: 24 VDC ±10 %∗2 [Including motor drive power, control power, stop, lock release]	
Parallel input	11 inputs (Photo-coupler isolation)	
Parallel output	13 outputs (Photo-coupler isolation)	
Compatible encoder	Incremental A/B phase (800 pulse/rotation)	Incremental A/B (800 pulse/rotation)/Z phase
Serial communication	RS485 (Modbus protocol compliant)	
Memory	EEPROM	
LED indicator	LED (Green/Red) one of each	
Lock control	Forced-lock release terminal∗3	
Cable length [m]	I/O cable: 5 or less, Actuator cable: 20 or less	
Cooling system	Natural air cooling	
Operating temperature range [°C]	0 to 40 (No freezing)	
Operating humidity range [%RH]	90 or less (No condensation)	
Storage temperature range [°C]	−10 to 60 (No freezing)	
Storage humidity range [%RH]	90 or less (No condensation)	
Insulation resistance [MΩ]	Between the housing and SG terminal: 50 (500 VDC)	
Weight [g]	150 (Screw mounting), 170 (DIN rail mounting)	

∗1 Do not use the power supply of "inrush current prevention type" for the controller power supply. When compliance with UL is required, the electric actuator and controller should be used with a UL1310 Class 2 power supply.

∗2 The power consumption changes depending on the actuator model. Refer to the specifications of actuator for more details.

∗3 Applicable to non-magnetising locks

How to Mount

a) Screw mounting (LEC□6□□-□)
(Installation with two M4 screws)

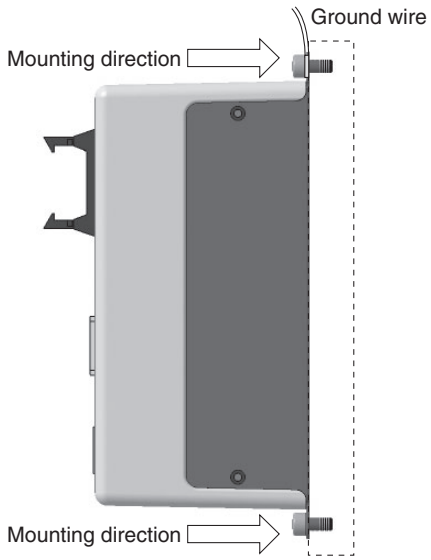

b) DIN rail mounting (LEC□6□□D-□)
(Installation with the DIN rail)

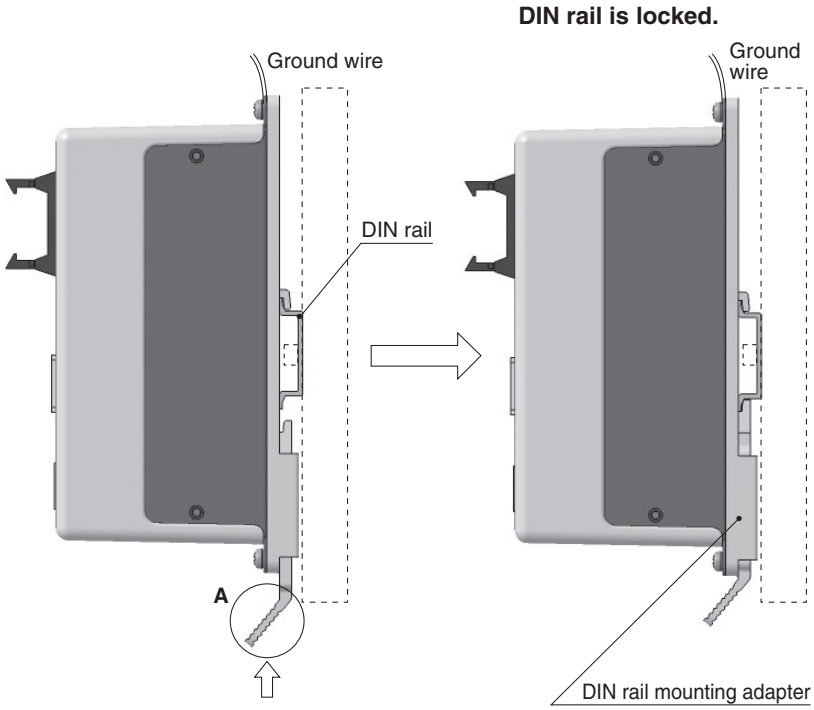

Hook the controller on the DIN rail and press the lever of section **A** in the arrow direction to lock it.

∗ When size 25 or more of the LE series are used, the space between the controllers should be 10 mm or more.

DIN rail
AXT100-DR-□

∗ For □, enter a number from the No. line in the table below.
Refer to the dimension drawings on page 193 for the mounting dimensions.

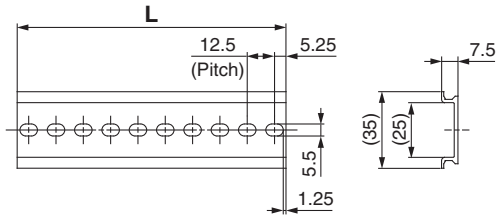

L Dimensions [mm]

No.	1	2	3	4	5	6	7	8	9	10	11	12	13	14	15	16	17	18	19	20
L	23	35.5	48	60.5	73	85.5	98	110.5	123	135.5	148	160.5	173	185.5	198	210.5	223	235.5	248	260.5
No.	21	22	23	24	25	26	27	28	29	30	31	32	33	34	35	36	37	38	39	40
L	273	285.5	298	310.5	323	335.5	348	360.5	373	385.5	398	410.5	423	435.5	448	460.5	473	485.5	498	510.5

DIN rail mounting adapter
LEC-D0 (with 2 mounting screws)

This should be used when the DIN rail mounting adapter is mounted onto a screw mounting type controller afterward.

Dimensions

a) Screw mounting (LEC□6□□-□)

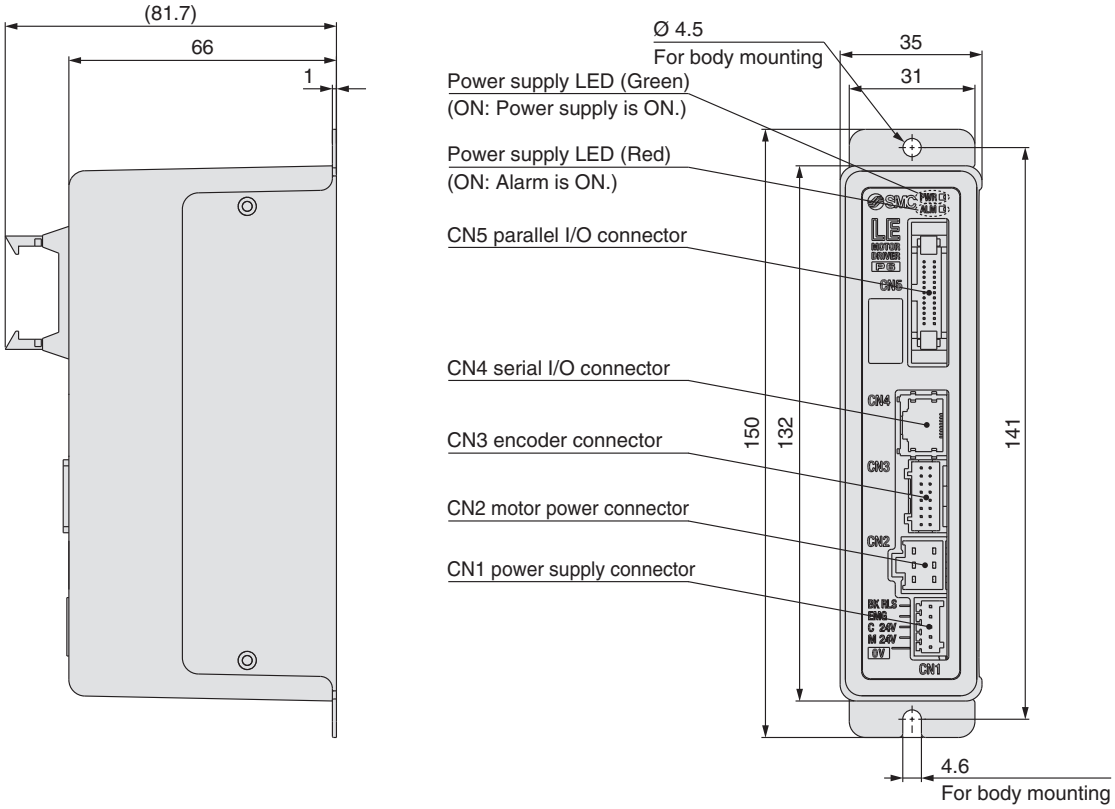

b) DIN rail mounting (LEC□6□□D-□)

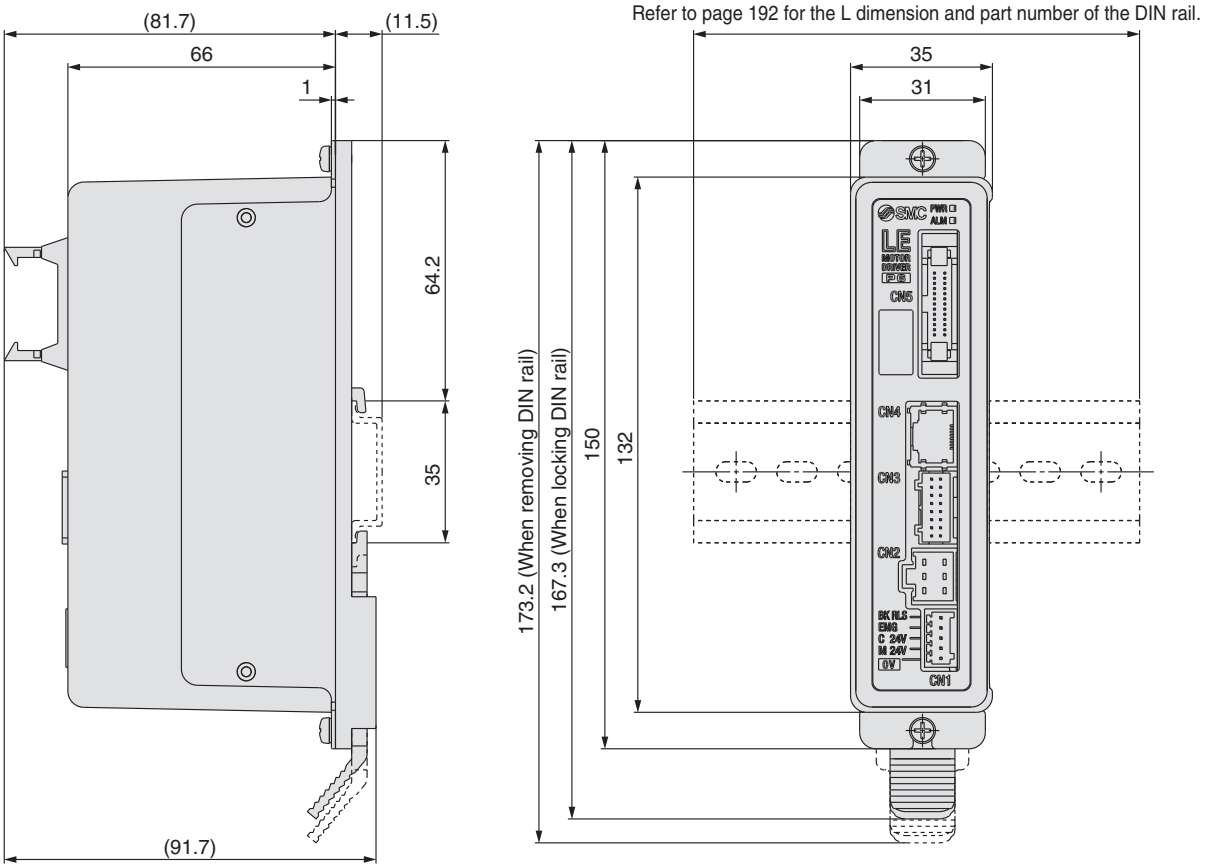

Wiring Example 1

Power Supply Connector: CN1

∗ The power supply plug is an accessory.
<Applicable cable size> AWG20 (0.5 mm²), cover diameter 2.0 mm or less

CN1 Power Supply Connector Terminal for LECA6 (PHOENIX CONTACT FK-MC0.5/7-ST-2.5)

Terminal name	Function	Details
0V	Common supply (–)	M 24V terminal/C 24V terminal/EMG terminal/BK RLS terminal are common (–).
M 24V	Motor power supply (+)	Motor power supply (+) supplied to the controller
C 24V	Control power supply (+)	Control power supply (+) supplied to the controller
EMG	Stop (+)	Input (+) for releasing the stop
BK RLS	Lock release (+)	Input (+) for releasing the lock
RG+	Regenerative output 1	Regenerative output terminals for external connection (Not necessary to connect them in the combination with the LE series standard specifications.)
RG–	Regenerative output 2	

Power supply plug for LECA6: LEC-D-1-2
∗ Accessory

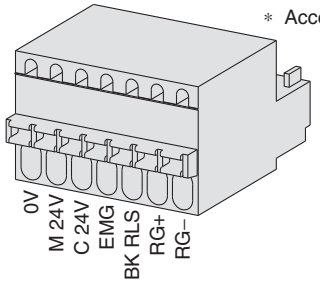

Wiring Example 2

Parallel I/O Connector: CN5

∗ When you connect a PLC to the CN5 parallel I/O connector, use the I/O cable (LEC-CN5-□).
∗ The wiring changes depending on the type of parallel I/O (NPN or PNP).

Wiring diagram

LEC□6N□□-□ (NPN)

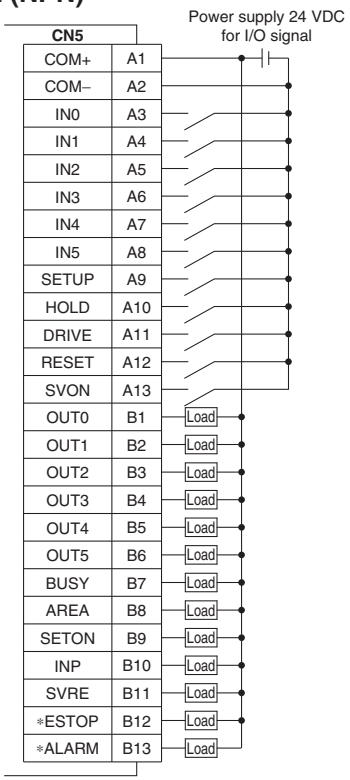

LEC□6P□□-□ (PNP)

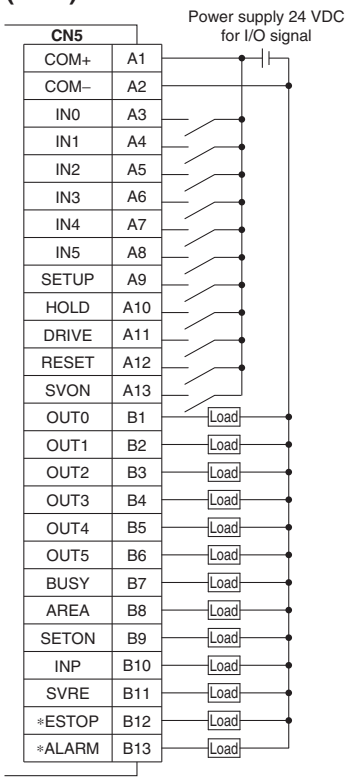

Input Signal

Name	Details
COM+	Connects the power supply 24 V for input/output signal
COM–	Connects the power supply 0 V for input/output signal
IN0 to IN5	Step data specified bit no. (Input is instructed by combining IN0 to 5.)
SETUP	Instruction to return to origin
HOLD	Temporarily stops operation
DRIVE	Instruction to drive
RESET	Resets alarm and interrupts operation
SVON	Servo ON instruction

Output Signal

Name	Details
OUT0 to OUT5	Outputs the step data no. during operation
BUSY	Outputs when the actuator is moving
AREA	Outputs within the step data area output setting range
SETON	Outputs when returning to origin
INP	Outputs when target position or target force is reached (Turns on when the positioning or pushing is completed.)
SVRE	Outputs when servo is on
∗ESTOP∗1	OFF when EMG stop is instructed
∗ALARM∗1	OFF when alarm is generated

∗1 Signal of negative-logic circuit (N.C.)

Step Data Setting

1. Step data setting for positioning

In this setting, the actuator moves toward and stops at the target position.
The following diagram shows the setting items and operation.
The setting items and set values for this operation are stated below.

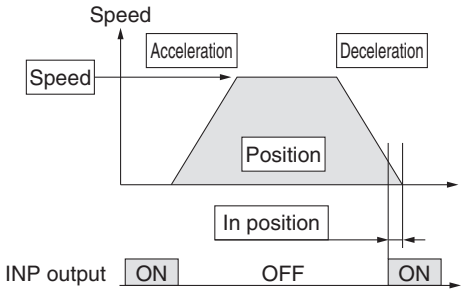

◎: Need to be set.
○: Need to be adjusted as required.
—: Setting is not required.

Step Data (Positioning)

Necessity	Item	Details
◎	Movement MOD	When the absolute position is required, set Absolute. When the relative position is required, set Relative.
◎	Speed	Transfer speed to the target position
◎	Position	Target position
○	Acceleration	Parameter which defines how rapidly the actuator reaches the speed set. The higher the set value, the faster it reaches the speed set.
○	Deceleration	Parameter which defines how rapidly the actuator comes to stop. The higher the set value, the quicker it stops.
◎	Pushing force	Set 0. (If values 1 to 100 are set, the operation will be changed to the pushing operation.)
—	Trigger LV	Setting is not required.
—	Pushing speed	Setting is not required.
○	Moving force	Max. torque during the positioning operation (No specific change is required.)
○	Area 1, Area 2	Condition that turns on the AREA output signal.
○	In position	Condition that turns on the INP output signal. When the actuator enters the range of [in position], the INP output signal turns on. (It is unnecessary to change this from the initial value.) When it is necessary to output the arrival signal before the operation is completed, make the value larger.

2. Step data setting for pushing

The actuator moves toward the pushing start position, and when it reaches that position, it starts pushing with the set force or less.
The following diagram shows the setting items and operation.
The setting items and set values for this operation are stated below.

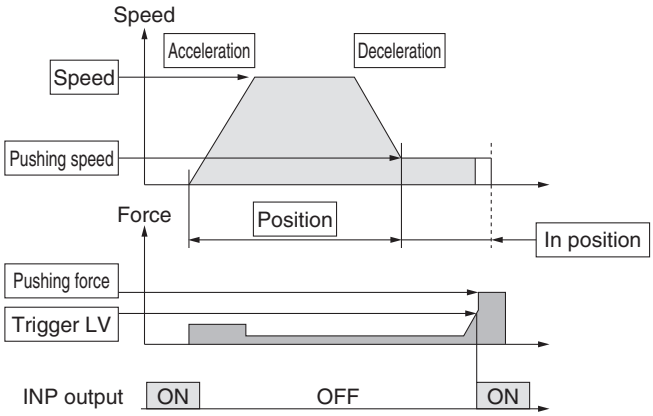

◎: Need to be set.
○: Need to be adjusted as required.

Step Data (Pushing)

Necessity	Item	Details
◎	Movement MOD	When the absolute position is required, set Absolute. When the relative position is required, set Relative.
◎	Speed	Transfer speed to the pushing start position
◎	Position	Pushing start position
○	Acceleration	Parameter which defines how rapidly the actuator reaches the speed set. The higher the set value, the faster it reaches the speed set.
○	Deceleration	Parameter which defines how rapidly the actuator comes to stop. The higher the set value, the quicker it stops.
◎	Pushing force	Pushing force ratio is defined. The setting range differs depending on the electric actuator type. Refer to the operation manual for the electric actuator.
◎	Trigger LV	Condition that turns on the INP output signal. The INP output signal turns on when the generated force exceeds the value. Trigger level should be the pushing force or less.
○	Pushing speed	Pushing speed during pushing. When the speed is set fast, the electric actuator and workpieces might be damaged due to the impact when they hit the end, so this set value should be smaller. Refer to the operation manual for the electric actuator.
○	Moving force	Max. torque during the positioning operation (No specific change is required.)
○	Area 1, Area 2	Condition that turns on the AREA output signal.
◎	In position	Transfer distance during pushing. If the transferred distance exceeds the setting, it stops even if it is not pushing. If the transfer distance is exceeded, the INP output signal will not turn on.

Signal Timing

Return to Origin

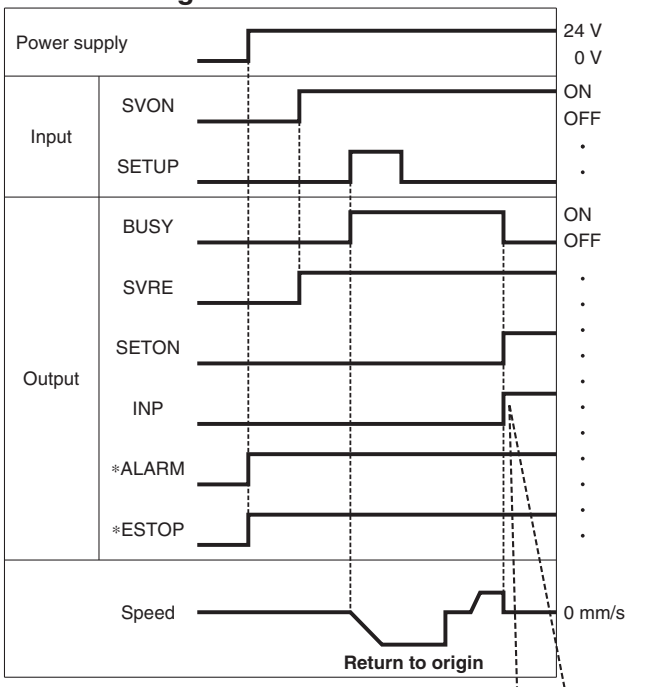

If the actuator is within the "In position" range of the basic parameter, INP will turn ON, but if not, it will remain OFF.

∗ "∗ALARM" and "∗ESTOP" are expressed as negative-logic circuits.

Positioning Operation

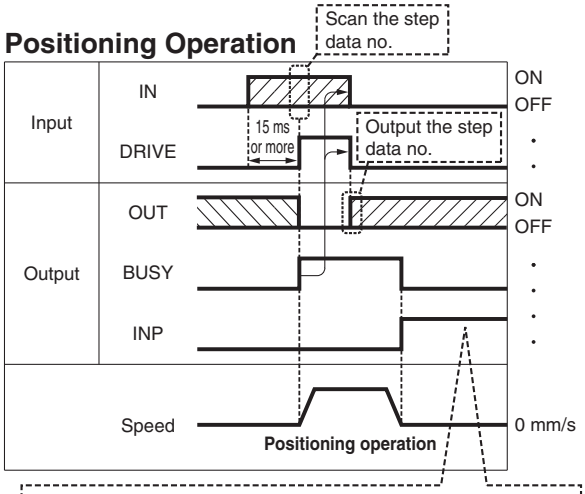

If the actuator is within the "In position" range of the step data, INP will turn ON, but if not, it will remain OFF.

Pushing Operation

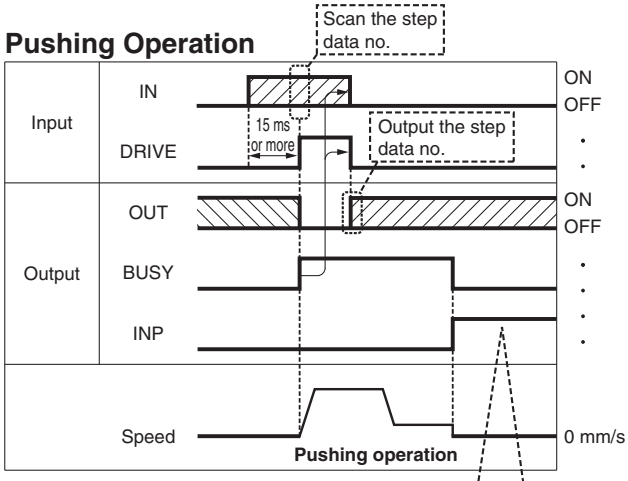

If the current pushing force exceeds the "Trigger LV" value of the step data, INP signal will turn ON.

∗ "OUT" is output when "DRIVE" is changed from ON to OFF.
Refer to the operation manual for details on the controller for the LEM series.
(When power supply is applied, "DRIVE" or "RESET" is turned ON or "∗ESTOP" is turned OFF, all of the "OUT" outputs are OFF.)

HOLD

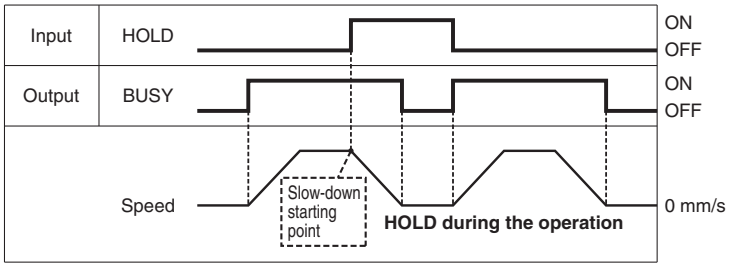

∗ When the actuator is within the "In position" range in the pushing operation, it does not stop even if HOLD signal is input.

Reset

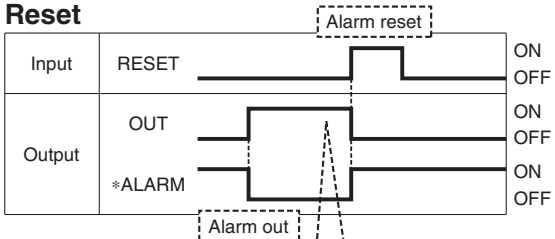

It is possible to identify the alarm group by the combination of OUT signals when the alarm is generated.

∗ "∗ALARM" is expressed as a negative-logic circuit.

Options: Actuator Cable

[Robotic cable, standard cable for step motor (Servo/24 VDC)]

LE − CP − 1 − ☐

Cable length (L) [m]

1	1.5
3	3
5	5
8	8*1
A	10*1
B	15*1
C	20*1

*1 Produced upon receipt of order (Robotic cable only)

Cable type

—	Robotic cable (Flexible cable)
S	Standard cable

LE-CP-1/3/5/Cable length: 1.5 m, 3 m, 5 m

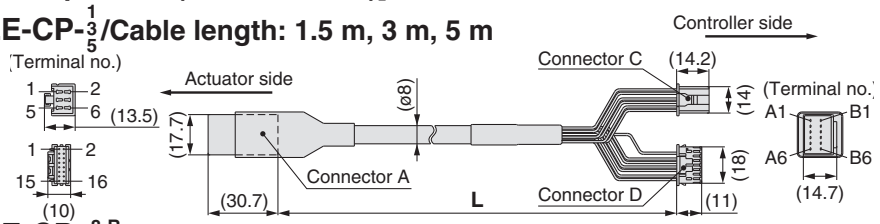

LE-CP-8/A/B/C/Cable length: 8 m, 10 m, 15 m, 20 m

(*1 Produced upon receipt of order)

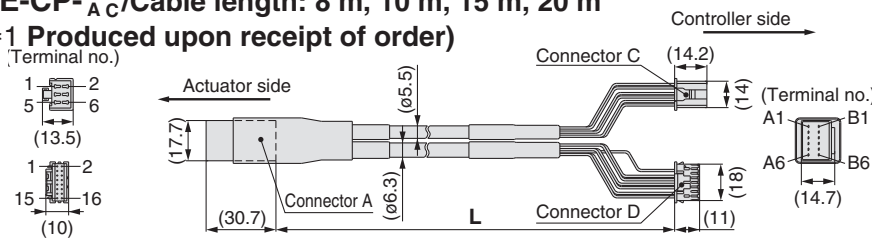

Weight

Product no.	Weight [g]	Note
LE-CP-1-S	190	Standard cable
LE-CP-3-S	280	
LE-CP-5-S	460	
LE-CP-1	140	Robotic cable
LE-CP-3	260	
LE-CP-5	420	
LE-CP-8	790	
LE-CP-A	980	
LE-CP-B	1460	
LE-CP-C	1940	

Signal	Connector A terminal no.	Cable color	Connector C terminal no.
A	B-1	Brown	2
$\overline{A}$	A-1	Red	1
B	B-2	Orange	6
$\overline{B}$	A-2	Yellow	5
COM-A/COM	B-3	Green	3
COM-B/—	A-3	Blue	4
Shield			
Vcc	B-4	Brown	12
GND	A-4	Black	13
$\overline{A}$	B-5	Red	7
A	A-5	Black	6
$\overline{B}$	B-6	Orange	9
B	A-6	Black	8
		—	3

Cable color	Connector D terminal no.
Brown	12
Black	13
Red	7
Black	6
Orange	9
Black	8
—	3

[Robotic cable, standard cable with lock and sensor for step motor (Servo/24 VDC)]

LE − CP − 1 − B − ☐

Cable length (L) [m]

1	1.5
3	3
5	5
8	8*1
A	10*1
B	15*1
C	20*1

*1 Produced upon receipt of order (Robotic cable only)

With lock and sensor

Cable type

—	Robotic cable (Flexible cable)
S	Standard cable

LE-CP-1/3/5/Cable length: 1.5 m, 3 m, 5 m

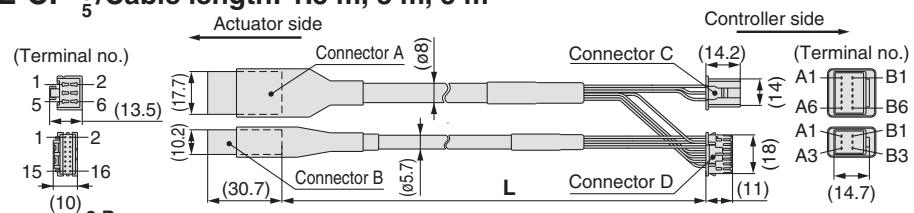

LE-CP-8/A/B/C/Cable length: 8 m, 10 m, 15 m, 20 m

(*1 Produced upon receipt of order)

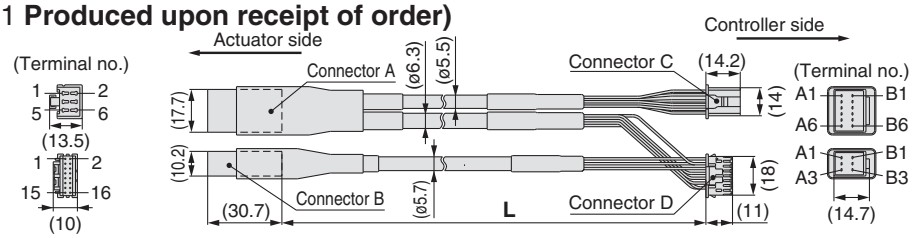

Weight

Product no.	Weight [g]	Note
LE-CP-1-B-S	240	Standard cable
LE-CP-3-B-S	380	
LE-CP-5-B-S	630	
LE-CP-1-B	190	Robotic cable
LE-CP-3-B	360	
LE-CP-5-B	590	
LE-CP-8-B	1060	
LE-CP-A-B	1320	
LE-CP-B-B	1920	
LE-CP-C-B	2620	

Signal	Connector A terminal no.	Cable color	Connector C terminal no.
A	B-1	Brown	2
$\overline{A}$	A-1	Red	1
B	B-2	Orange	6
$\overline{B}$	A-2	Yellow	5
COM-A/COM	B-3	Green	3
COM-B/—	A-3	Blue	4
Shield			
Vcc	B-4	Brown	12
GND	A-4	Black	13
$\overline{A}$	B-5	Red	7
A	A-5	Black	6
$\overline{B}$	B-6	Orange	9
B	A-6	Black	8
		—	3

Cable color	Connector D terminal no.
Brown	12
Black	13
Red	7
Black	6
Orange	9
Black	8
—	3

Signal	Connector B terminal no.		
Lock (+)	B-1	Red	4
Lock (–)	A-1	Black	5
Sensor (+)	B-3	Brown	1
Sensor (–)	A-3	Blue	2

[Robotic cable for servo motor (24 VDC)]

LE – CA – 1

Cable length (L) [m]

1	1.5
3	3
5	5
8	8*1
A	10*1
B	15*1
C	20*1

*1 Produced upon receipt of order

Weight

Product no.	Weight [g]
LE-CA-1	220
LE-CA-3	420
LE-CA-5	700
LE-CA-8	1100
LE-CA-A	1370
LE-CA-B	2050
LE-CA-C	2720

LE-CA-□

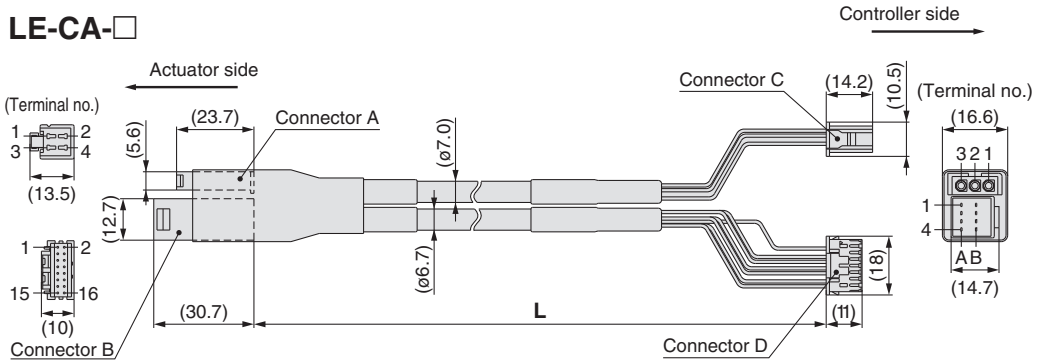

Signal	Connector A terminal no.	Cable color	Connector C terminal no.
U	1	Red	1
V	2	White	2
W	3	Black	3

Signal	Connector B terminal no.	Cable color	Connector D terminal no.
Vcc	B-1	Brown	12
GND	A-1	Black	13
$\overline{A}$	B-2	Red	7
A	A-2	Black	6
$\overline{B}$	B-3	Orange	9
B	A-3	Black	8
$\overline{Z}$	B-4	Yellow	11
Z	A-4	Black	10
		—	3

Shield

Connection of shield material

[Robotic cable with lock and sensor for servo motor (24 VDC)]

LE – CA – 1 – B

Cable length (L) [m]

1	1.5
3	3
5	5
8	8*1
A	10*1
B	15*1
C	20*1

*1 Produced upon receipt of order

With lock and sensor

Weight

Product no.	Weight [g]
LE-CA-1-B	270
LE-CA-3-B	520
LE-CA-5-B	870
LE-CA-8-B	1370
LE-CA-A-B	1710
LE-CA-B-B	2560
LE-CA-C-B	3400

LE-CA-□-B

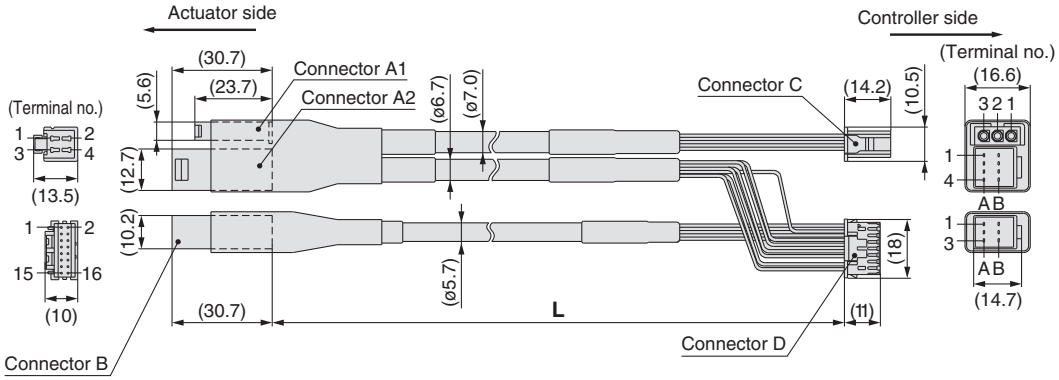

Signal	Connector A1 terminal no.	Cable color	Connector C terminal no.
U	1	Red	1
V	2	White	2
W	3	Black	3

Signal	Connector A2 terminal no.	Cable color	Connector D terminal no.
Vcc	B-1	Brown	12
GND	A-1	Black	13
$\overline{A}$	B-2	Red	7
A	A-2	Black	6
$\overline{B}$	B-3	Orange	9
B	A-3	Black	8
$\overline{Z}$	B-4	Yellow	11
Z	A-4	Black	10
		—	3

Shield

Connection of shield material

Signal	Connector B terminal no.		
Lock (+)	B-1	Red	4
Lock (–)	A-1	Black	5
Sensor (+)	B-3	Brown	1
Sensor (–)	A-3	Black	2

Option: I/O Cable

LEC − CN5 − 1

Cable length (L) [m]

1	1.5
3	3
5	5

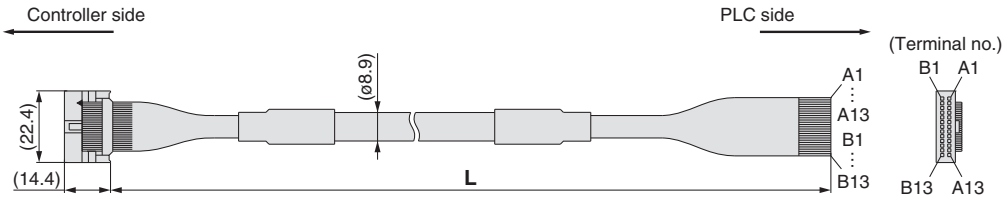

∗ Conductor size: AWG28

Connector pin no.	Insulation colour	Dot mark	Dot colour
A1	Light brown	■	Black
A2	Light brown	■	Red
A3	Yellow	■	Black
A4	Yellow	■	Red
A5	Light green	■	Black
A6	Light green	■	Red
A7	Gray	■	Black
A8	Gray	■	Red
A9	White	■	Black
A10	White	■	Red
A11	Light brown	■ ■	Black
A12	Light brown	■ ■	Red
A13	Yellow	■ ■	Black

Connector pin no.	Insulation colour	Dot mark	Dot colour
B1	Yellow	■ ■	Red
B2	Light green	■ ■	Black
B3	Light green	■ ■	Red
B4	Gray	■ ■	Black
B5	Gray	■ ■	Red
B6	White	■ ■	Black
B7	White	■ ■	Red
B8	Light brown	■ ■ ■	Black
B9	Light brown	■ ■ ■	Red
B10	Yellow	■ ■ ■	Black
B11	Yellow	■ ■ ■	Red
B12	Light green	■ ■ ■	Black
B13	Light green	■ ■ ■	Red
—	Shield		

Weight

Product no.	Weight [g]
LEC-CN5-1	170
LEC-CN5-3	320
LEC-CN5-5	520

Option: Noise Filter Set for Servo Motor (24 VDC)

LEC − NFA

Contents of the set: 2 noise filters (Manufactured by WURTH ELEKTRONIK: 74271222)

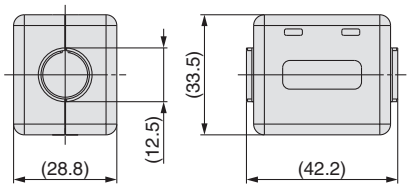

∗ Refer to the LECA6 series Operation Manual for installation.

LEC Series
Communication Cable for Controller Setting/LEC-W2A-□

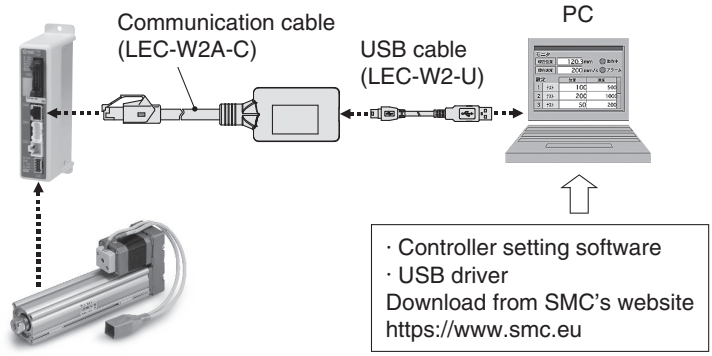

How to Order

LEC-W2A-C
- C: Communication cable

LEC-W2-U
- U: USB cable

Compatible Controller/Driver

Step data input type	**LECA6 Series**
Pulse input type	**LECPA Series**
Step Motor Controller	**JXCE1/91/P1/D1/L1 Series**

∗ When connecting to a JXCE1/91/P1/D1/L1 series product, use a conversion cable (P5062-5) as a relay.

Hardware Requirements

OS	Windows®7, Windows®8.1, Windows®10
Communication interface	USB 1.1 or USB 2.0 ports
Display	1024 x 768 or more

∗ Windows®7, Windows®8.1 and Windows®10 are registered trademarks of Microsoft Corporation in the United States.

Screen Example

Easy mode screen example

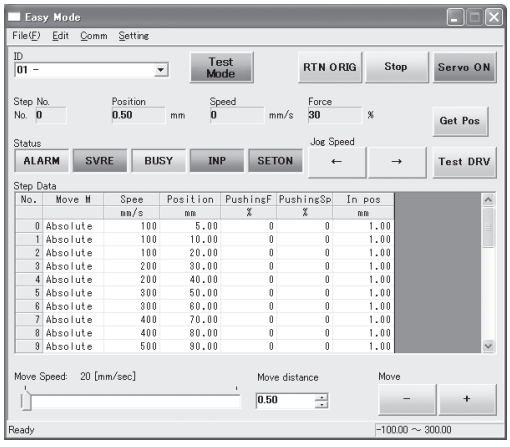

Normal mode screen example

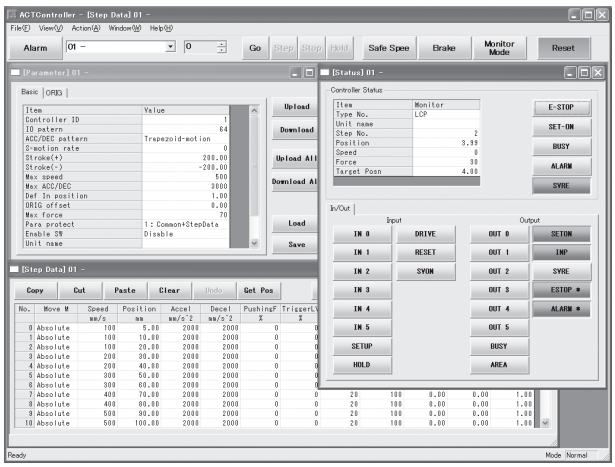

Easy operation and simple setting

- Allowing to set and display actuator step data such as position, speed, force, etc.
- Setting of step data and test drive can be performed on the same page.
- Can be used to jog and move at a constant rate

Detailed setting

- Step data can be set in detail.
- Signals and terminal status can be monitored.
- Parameters can be set.
- JOG and constant rate movement, return to origin, test drive and testing of forced output can be performed.

LEC Series
Teaching Box/LEC-T1

How to Order

LEC-T1-3EG□

Teaching box

Cable length [m]

3	3

Initial language

J	Japanese
E	English

∗ The displayed language can be changed to English or Japanese.

Stop switch

G	Equipped with stop switch

Enable switch

—	None
S	Equipped with enable switch

∗ Interlock switch for jog and test function

Standard functions
- **Chinese character display**
- **Stop switch is provided.**

Option
- **Enable switch is provided.**

Specifications

Item	Description
Switch	Stop switch, Enable switch (Option)
Cable length [m]	3
Enclosure	IP64 (Except connector)
Operating temperature range [°C]	5 to 50
Operating humidity range [%RH]	90 or less (No condensation)
Weight [g]	350 (Except cable)

[CE-compliant products]
The EMC compliance of the teaching box was tested with a step motor controller (servo/24 VDC) and an applicable actuator.
[UL-compliant products]
When compliance with UL is required, the electric actuator and controller should be used with a UL1310 Class 2 power supply.

Easy Mode

Function	Details
Step data	• Setting of step data
Jog	• Jog operation • Return to origin
Test	• 1 step operation • Return to origin
Monitor	• Display of axis and step data no. • Display of two items selected from Position, Speed, Force.
ALM	• Active alarm display • Alarm reset
TB setting	• Reconnection of axis (Ver. 1.∗∗) • Displayed language setting (Ver. 2.∗∗) • Setting of easy/normal mode • Setting step data and selection of items from easy mode monitor

Menu Operations Flowchart

Menu
Data
Monitor
Jog
Test
ALM
TB setting

Data
Step data no.
Setting of two items selected below
Ver. 1.∗∗:
Position, Speed, Force, Acceleration, Deceleration
Ver. 2.∗∗:
Position, Speed, Pushing force, Acceleration, Deceleration, Movement MOD, Trigger LV, Pushing speed, Moving force, Area 1, Area 2, In position

Monitor
Display of step no.
Display of two items selected below
(Position, Speed, Force)

Jog
Return to origin
Jog operation

Test
1 step operation

ALM
Active alarm display
Alarm reset

TB setting
Reconnect (Ver. 1.∗∗)
Japanese/English (Ver. 2.∗∗)
Easy/Normal
Set item

Normal Mode

Function	Details
Step data	• Step data setting
Parameter	• Parameters setting
Test	• Jog operation/Constant rate movement • Return to origin • Test drive (Specify a maximum of 5 step data and operate.) • Forced output (Forced signal output, Forced terminal output)
Monitor	• Drive monitor • Output signal monitor • Input signal monitor • Output terminal monitor • Input terminal monitor
ALM	• Active alarm display (Alarm reset) • Alarm log record display
File	• Data saving Save the step data and parameters of the controller which is being used for communication (it is possible to save four files, with one set of step data and parameters defined as one file). • Load to controller Loads the data which is saved in the teaching box to the controller which is being used for communication. • Delete the saved data. • File protection (Ver. 2.**)
TB setting	• Display setting (Easy/Normal mode) • Language setting (Japanese/English) • Backlight setting • LCD contrast setting • Beep sound setting • Max. connection axis • Distance unit (mm/inch)
Reconnect	• Reconnection of axis

Menu Operations Flowchart

- **Menu**: Step data / Parameter / Monitor / Test / ALM / File / TB setting / Reconnect
- **Step data**: Step data no. / Movement MOD / Speed / Position / Acceleration / Deceleration / Pushing force / Trigger LV / Pushing speed / Moving force / Area 1, 2 / In position
- **Parameter**: Basic / ORIG
  - **Basic setting**
  - **ORIG setting**
- **Monitor**: Drive / Output signal / Input signal / Output terminal / Input terminal
  - **DRV monitor**: Position, Speed, Torque / Step no. / Last step no.
  - **Output signal monitor**
  - **Input signal monitor**
  - **Output terminal monitor**
  - **Input terminal monitor**
- **Test**: JOG/MOVE / Return to ORIG / Test drive / Forced output
- **ALM**: Status / ALM Log record
  - **Status**: Active alarm display / Alarm reset
  - **ALM Log record display**: Log entry display
- **File**: Data saving / Load to controller / File deletion / File protection (Ver. 2.**)
- **TB setting**: Easy/Normal / Language / Backlight / LCD contrast / Beep / Max. connection axis / Password / Distance unit
- **Reconnect**

Dimensions

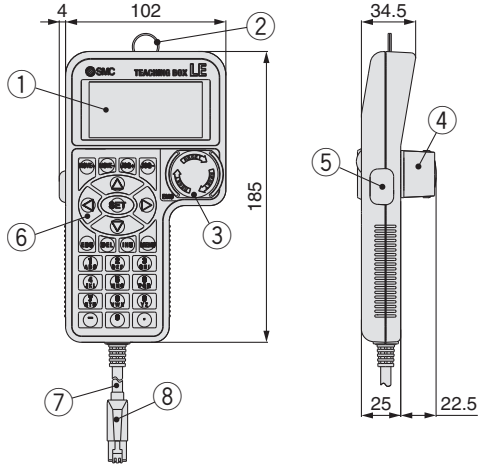

No.	Description	Function
1	**LCD**	A screen of liquid crystal display (with backlight)
2	**Ring**	A ring for hanging the teaching box
3	**Stop switch**	When switch is pushed in, the switch locks and stops. The lock is released when it is turned to the right.
4	**Stop switch guard**	A guard for the stop switch
5	**Enable switch (Option)**	Prevents unintentional operation (unexpected operation) of the jog test function. Other functions such as data change are not covered.
6	**Key switch**	Switch for each input
7	**Cable**	Length: 3 meters
8	**Connector**	A connector connected to CN4 of the controller

Gateway Unit
LEC-G Series

How to Order

⚠Caution

[CE-compliant products]
EMC compliance was tested by combining the electric actuator LE series and the controller LEC series. The EMC depends on the configuration of the customer's control panel and the relationship with other electrical equipment and wiring. Therefore, compliance with the EMC directive cannot be certified for SMC components incorporated into the customer's equipment under actual operating conditions. As a result, it is necessary for the customer to verify compliance with the EMC directive for the machinery and equipment as a whole.

[UL-compliant products]
When compliance with UL is required, the electric actuator and controller should be used with a UL1310 Class 2 power supply.

Gateway unit **LEC-G MJ2 □**

Applicable Fieldbus protocols

MJ2	CC-Link Ver. 2.0
DN1	DeviceNet™
PR1	PROFIBUS DP
EN1	EtherNet/IP™

Mounting

—	Screw mounting
D*1	DIN rail

*1 The DIN rail is not included. Order it separately.

Cable **LEC-CG 1-L**

Cable type

1	Communication cable
2	Cable between branches

Cable length

K	0.3 m
L	0.5 m
1	1 m

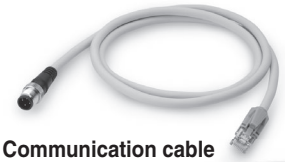
Communication cable

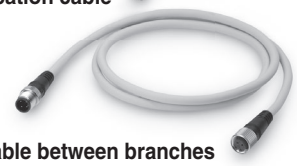
Cable between branches

Branch connector **LEC-CGD**

Branch connector

Terminating resistor **LEC-CGR**

Specifications

Model			LEC-GMJ2□	LEC-GDN1□	LEC-GPR1□	LEC-GEN1□
Communication specifications	Applicable system	Fieldbus	CC-Link	DeviceNet™	PROFIBUS DP	EtherNet/IP™
		Version*1	Ver. 2.0	Release 2.0	V1	Release 1.0
	Communication speed [bps]		156 k/625 k/2.5 M /5 M/10 M	125 k/250 k/500 k	9.6 k/19.2 k/45.45 k/ 93.75 k/187.5 k/500 k/ 1.5 M/3 M/6 M/12 M	10 M/100 M
	Configuration file*2		—	EDS file	GSD file	EDS file
	I/O occupation area		4 stations occupied (8 times setting) Input 896 points 108 words Output 896 points 108 words	Input 200 bytes Output 200 bytes	Input 57 words Output 57 words	Input 256 bytes Output 256 bytes
	Power supply for communication	Power supply voltage [V]*6	—	11 to 25 VDC	—	—
		Internal current consumption [mA]	—	100	—	—
	Communication connector specifications		Connector (Accessory)	Connector (Accessory)	D-sub	RJ45
	Terminating resistor		Not included	Not included	Not included	Not included
Power supply voltage [V]*6			24 VDC ±10 %			
Current consumption [mA]	Not connected to teaching box		200			
	Connected to teaching box		300			
EMG output terminal			30 VDC 1 A			
Controller specifications	Applicable controllers		LECA6 Series			
	Communication speed [bps]*3		115.2 k/230.4 k			
	Max. number of connectable controllers*4		12	8*5	5	12
Accessories			Power supply connector, communication connector		Power supply connector	
Operating temperature range [°C]			0 to 40 (No freezing)			
Operating humidity range [%RH]			90 or less (No condensation)			
Storage temperature range [°C]			–10 to 60 (No freezing)			
Storage humidity range [%RH]			90 or less (No condensation)			
Weight [g]			200 (Screw mounting), 220 (DIN rail mounting)			

*1 Please note that versions are subject to change.
*2 Each file can be downloaded from the SMC website.
*3 When using a teaching box (LEC-T1-□), set the communication speed to 115.2 kbps.
*4 A communication response time for 1 controller is approximately 30 ms.
Refer to "Communication Response Time Guideline" for response times when several controllers are connected.
*5 For step data input, up to 12 controllers connectable.
*6 When compliance with UL is required, the electric actuator and controller should be used with a UL1310 Class 2 power supply.

Communication Response Time Guideline

Response time between gateway unit and controllers depends on the number of controllers connected to the gateway unit. For response time, refer to the graph below.

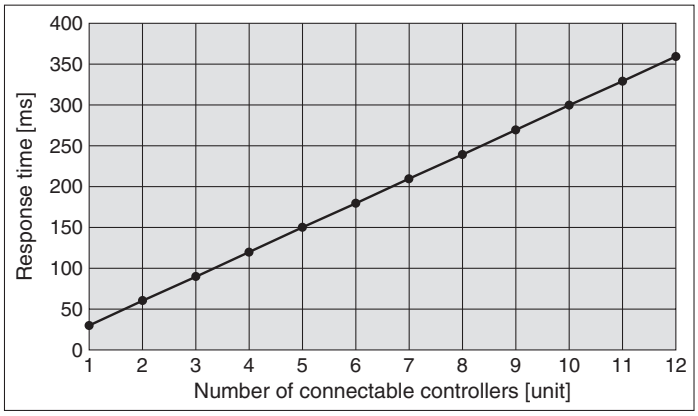

* This graph shows delay times between gateway unit and controllers. Fieldbus network delay time is not included.

Dimensions

Screw mounting (LEC-G□□□)

Applicable Fieldbus protocol: CC-Link Ver. 2.0

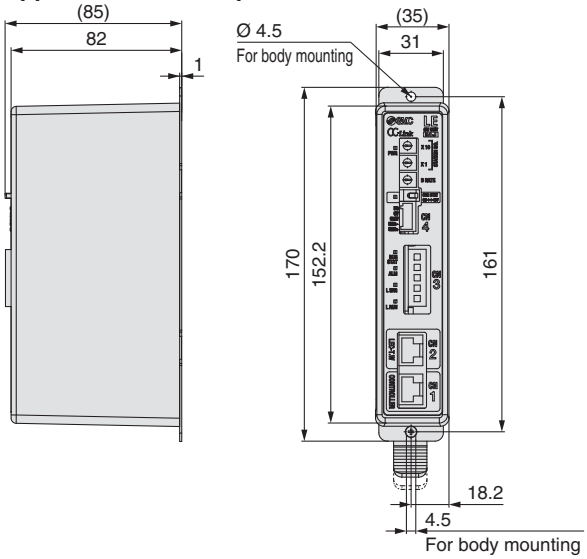

Applicable Fieldbus protocol: DeviceNet™

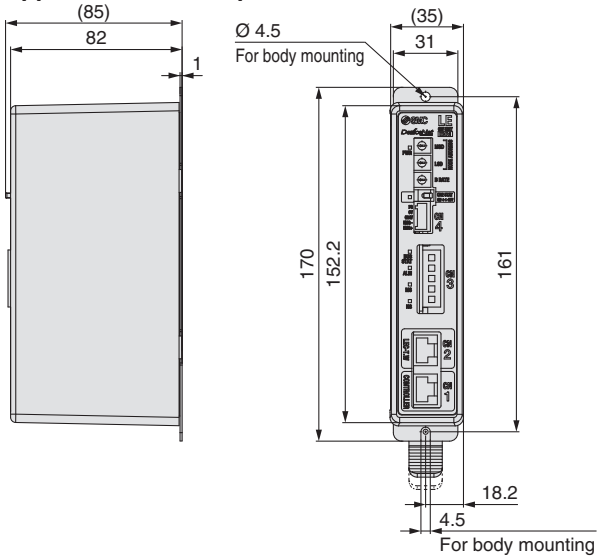

Applicable Fieldbus protocol: PROFIBUS DP

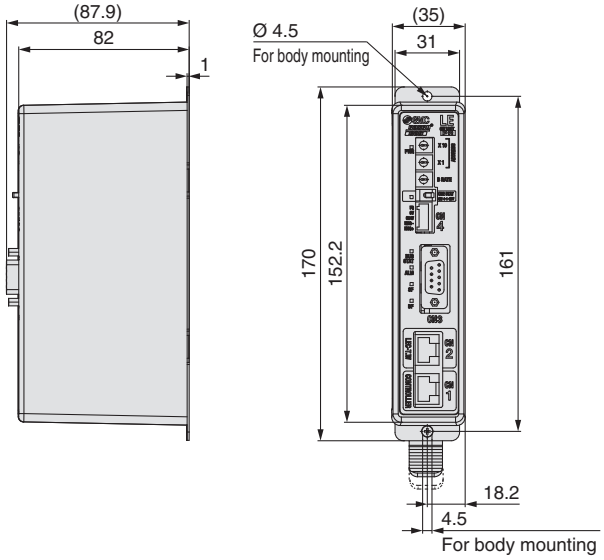

Applicable Fieldbus protocol: EtherNet/IP™

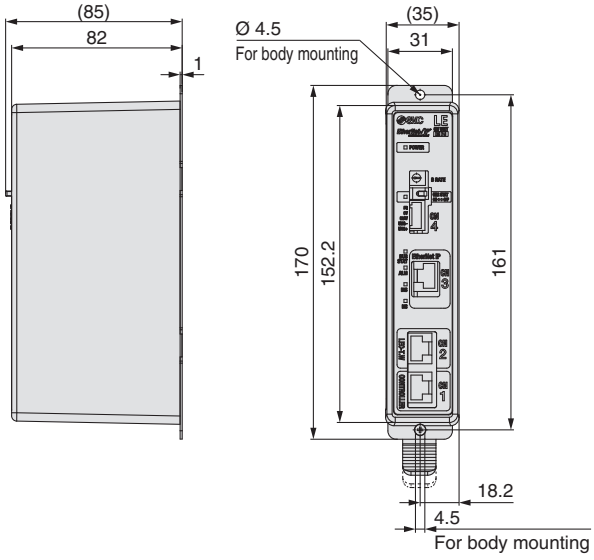

■**Trademark** DeviceNet™ is a trademark of ODVA. EtherNet/IP™ is a trademark of ODVA.

Dimensions

DIN rail mounting (LEC-G□□□D)

Applicable Fieldbus protocol: CC-Link Ver. 2.0

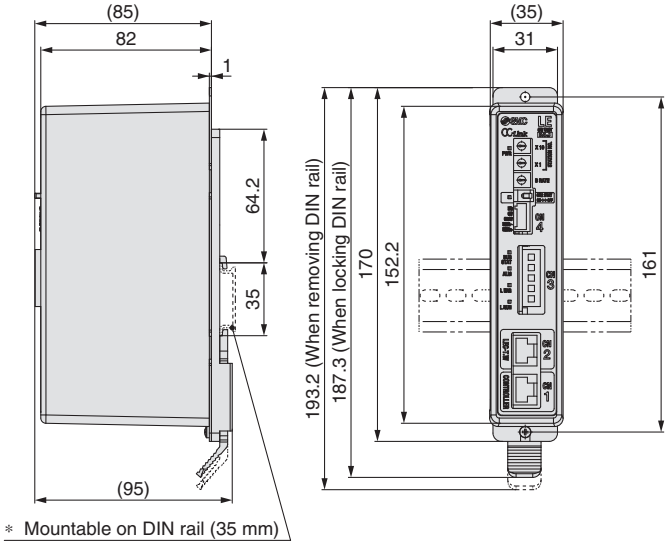

∗ Mountable on DIN rail (35 mm)

Applicable Fieldbus protocol: DeviceNet™

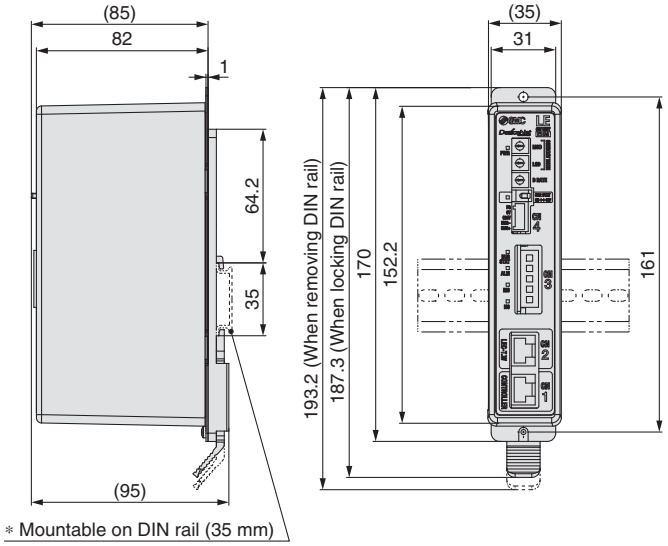

∗ Mountable on DIN rail (35 mm)

Applicable Fieldbus protocol: PROFIBUS DP

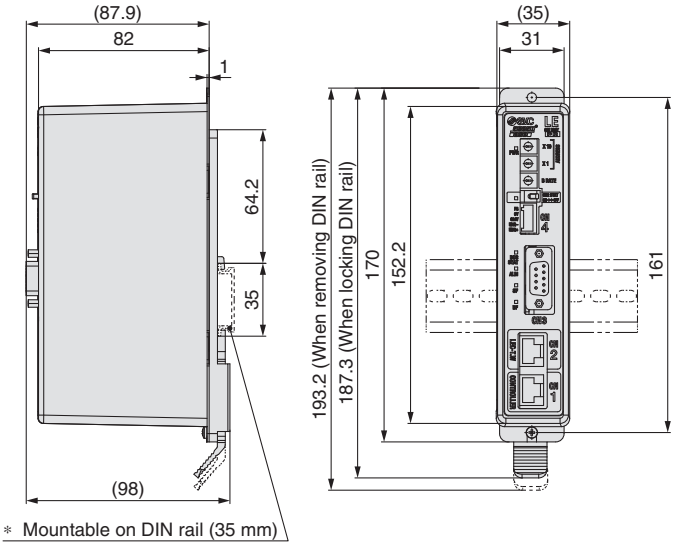

∗ Mountable on DIN rail (35 mm)

Applicable Fieldbus protocol: EtherNet/IP™

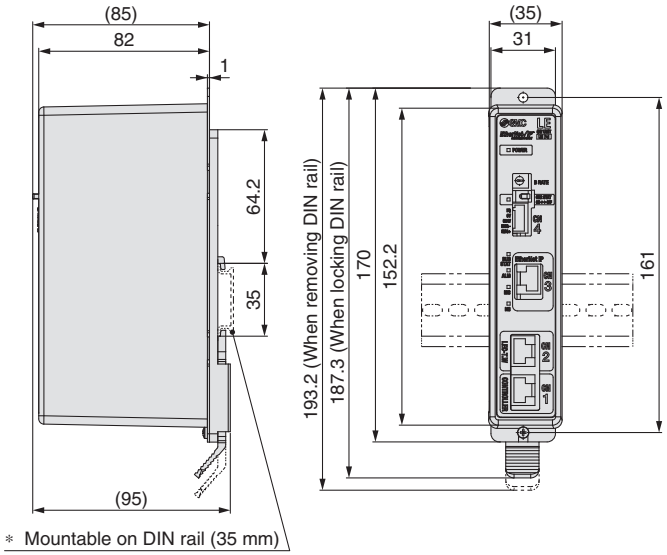

∗ Mountable on DIN rail (35 mm)

DIN rail
AXT100-DR-□

∗ For □, enter a number from the No. line in the table below.
Refer to the dimension drawings above for the mounting dimensions.

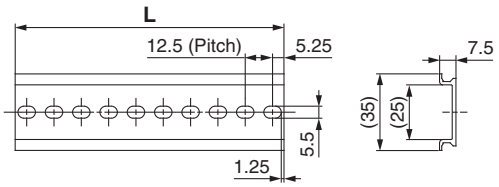

L Dimensions [mm]

No.	1	2	3	4	5	6	7	8	9	10	11	12	13	14	15	16	17	18	19	20
L	23	35.5	48	60.5	73	85.5	98	110.5	123	135.5	148	160.5	173	185.5	198	210.5	223	235.5	248	260.5

No.	21	22	23	24	25	26	27	28	29	30	31	32	33	34	35	36	37	38	39	40
L	273	285.5	298	310.5	323	335.5	348	360.5	373	385.5	398	410.5	423	435.5	448	460.5	473	485.5	498	510.5

■**Trademark** DeviceNet™ is a trademark of ODVA. EtherNet/IP™ is a trademark of ODVA.

Wiring Example

Power Supply Connector: CN1

* The power supply plug is an accessory.
<Applicable cable size> AWG20 (0.5 mm^2), cover diameter 2.0 mm or less

CN1 Power Supply Connector Terminal for LEC-G (PHOENIX CONTACT FK-MC0.5/5-ST-2.5)

Terminal name	Function	Details
EMG +	EMG signal output +	Output terminal of the emergency stop switch of the teaching box
EMG –	EMG signal output –	
24V	Power supply + terminal	Power supply terminal of the Gateway unit (Power to the teaching box is supplied from this terminal)
0V	Power supply – terminal	
FG	FG terminal	Grounding terminal

Power supply plug for LEC-G: LEC-D-1-1

* Accessory

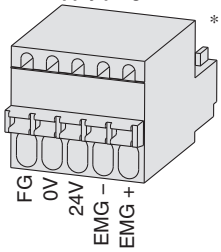

Programless Controller

LECP1 Series

How to Order

LE C P 1 P 1 [ ] – LEY16B-100

Controller

Compatible motor

P	Step motor (Servo/24 VDC)

Number of step data (Points)

1	14 (Programless)

Parallel I/O type

N	NPN
P	PNP

I/O cable length [m]

—	Without cable
1	1.5
3	3
5	5

Option

—	Screw mounting
D∗1	DIN rail mounting

∗1 The DIN rail is not included. Order it separately.

Actuator part number

Without cable specifications and actuator options
Example: Enter "LEY16B-100"
for the LEY16B-100B-R16N1.

∗ **When controller equipped type is selected when ordering the LE series, you do not need to order this controller.**

⚠Caution

[CE-compliant products]
EMC compliance was tested by combining the electric actuator LE series and the controller LEC series.
The EMC depends on the configuration of the customer's control panel and the relationship with other electrical equipment and wiring. Therefore, compliance with the EMC directive cannot be certified for SMC components incorporated into the customer's equipment under actual operating conditions. As a result, it is necessary for the customer to verify compliance with the EMC directive for the machinery and equipment as a whole.
[UL-compliant products]
When compliance with UL is required, the electric actuator and controller should be used with a UL1310 Class 2 power supply.

The controller is sold as single unit after the compatible actuator is set.
Confirm that the combination of the controller and actuator is correct.

∗ Refer to the operation manual for using the products. Please download it via our website, https://www.smc.eu

Specifications

Basic Specifications

Item	LECP1
Compatible motor	Step motor (Servo/24 VDC)
Power supply∗1	Power supply voltage: 24 VDC ±10 %∗2 [Including the motor drive power, control power supply, stop, lock release]
Parallel input	6 inputs (Photo-coupler isolation)
Parallel output	6 outputs (Photo-coupler isolation)
Stop points	14 points (Position number 1 to 14(E))
Compatible encoder	Incremental A/B phase (800 pulse/rotation)
Memory	EEPROM
LED indicator	LED (Green/Red) one of each
7-segment LED display∗3	1 digit, 7-segment display (Red) Figures are expressed in hexadecimal ("10" to "15" in decimal number are expressed as "A" to "F")
Lock control	Forced-lock release terminal∗4
Cable length [m]	I/O cable: 5 or less, Actuator cable: 20 or less
Cooling system	Natural air cooling
Operating temperature range [°C]	0 to 40 (No freezing)
Operating humidity range [%RH]	90 or less (No condensation)
Storage temperature range [°C]	–10 to 60 (No freezing)
Storage humidity range [%RH]	90 or less (No condensation)
Insulation resistance [MΩ]	Between the housing and SG terminal: 50 (500 VDC)
Weight [g]	130 (Screw mounting), 150 (DIN rail mounting)

∗1 Do not use the power supply of "inrush current prevention type" for the controller input power supply. When compliance with UL is required, the electric actuator and controller should be used with a UL1310 Class 2 power supply.
∗2 The power consumption changes depending on the actuator model. Refer to the each actuator's operation manual, etc., for details.
∗3 "10" to "15" in decimal number are displayed as follows in the 7-segment LED.

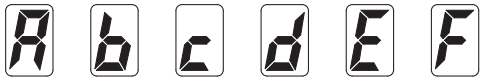

Decimal display	10	11	12	13	14	15
Hexadecimal display	A	b	c	d	E	F

∗4 Applicable to non-magnetising locks

Controller Details

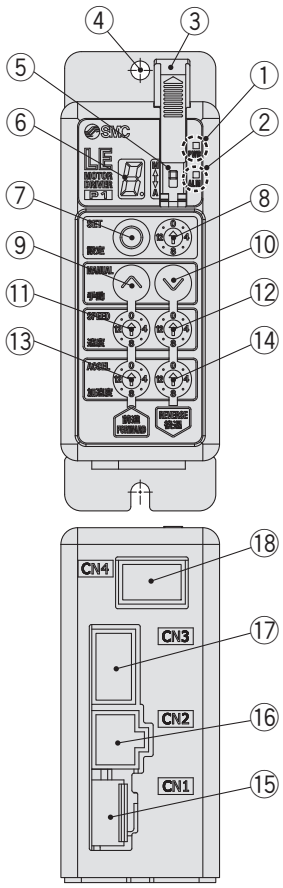

No.	Display	Description	Details
①	**PWR**	Power supply LED	Power supply ON/Servo ON : Green turns on Power supply ON/Servo OFF: Green flashes
②	**ALM**	Alarm LED	With alarm : Red turns on Parameter setting : Red flashes
③	—	Cover	Change and protection of the mode switch (Close the cover after changing switch)
④	—	FG	Frame ground (Tighten the screw with the washer when mounting the controller. Connect the ground wire.)
⑤	—	Mode switch	Switch the mode between manual and auto.
⑥	—	7-segment LED	Stop position, the value set by ⑧ and alarm information are displayed.
⑦	**SET**	Set button	Decide the settings or drive operation in Manual mode.
⑧	—	Position selecting switch	Assign the position to drive (1 to 14), and the origin position (15).
⑨	**MANUAL**	Manual forward button	Perform forward jog and inching.
⑩		Manual reverse button	Perform reverse jog and inching.
⑪	**SPEED**	Forward speed switch	16 forward speeds are available.
⑫		Reverse speed switch	16 reverse speeds are available.
⑬	**ACCEL**	Forward acceleration switch	16 forward acceleration steps are available.
⑭		Reverse acceleration switch	16 reverse acceleration steps are available.
⑮	**CN1**	Power supply connector	Connect the power supply cable.
⑯	**CN2**	Motor connector	Connect the motor connector.
⑰	**CN3**	Encoder connector	Connect the encoder connector.
⑱	**CN4**	I/O connector	Connect I/O cable.

How to Mount

Controller mounting shown below.

1. Mounting screw (LECP1□□-□)

(Installation with two M4 screws)

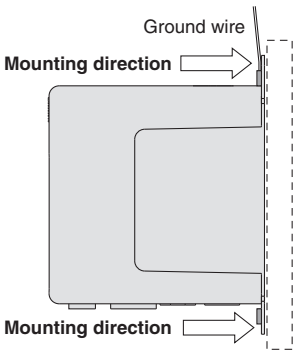

2. Grounding

Tighten the screw with the washer when mounting the ground wire as shown below.

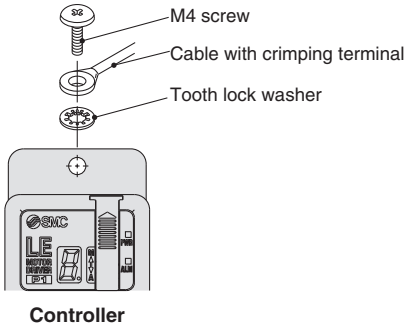

∗ When size 25 or more of the LE series are used, the space between the controllers should be 10 mm or more.

⚠Caution

- M4 screws, cable with crimping terminal and tooth lock washer are not included. Be sure to carry out grounding earth in order to ensure the noise tolerance.
- Use a watchmaker's screwdriver of the size shown below when changing position switch ⑧ and the set value of the speed/acceleration switch ⑪ to ⑭.

Size
End width **L**: 2.0 to 2.4 [mm]
End thickness **W**: 0.5 to 0.6 [mm]

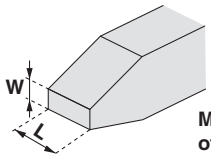

Magnified view of the end of the screwdriver

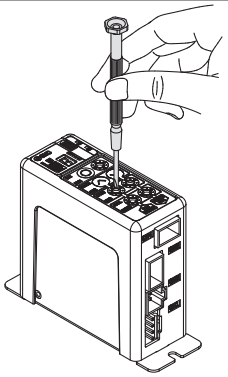

Dimensions

Screw mounting (LEC□1□□-□)

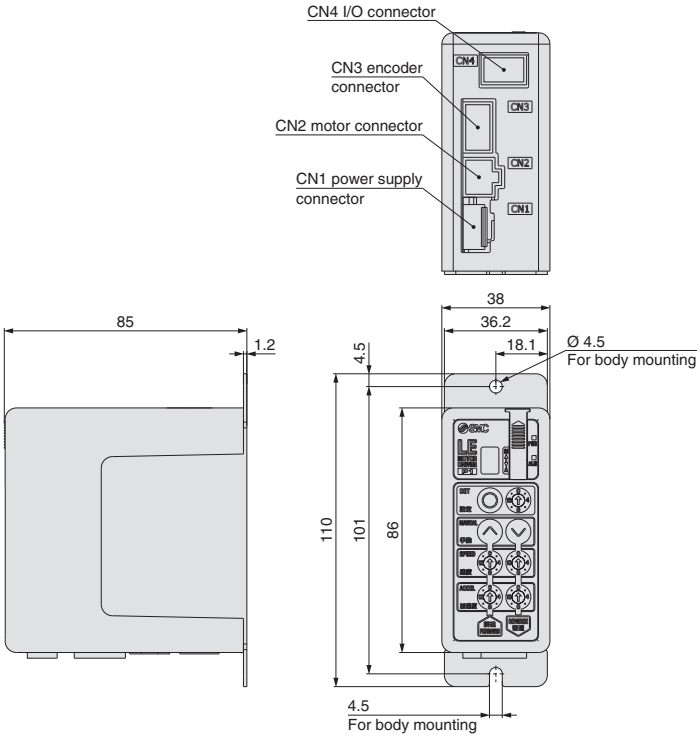

DIN rail mounting (LEC□1□□D-□)

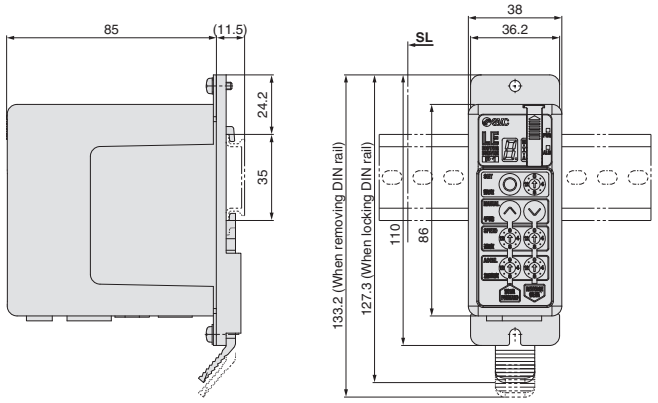

DIN rail
AXT100-DR-□

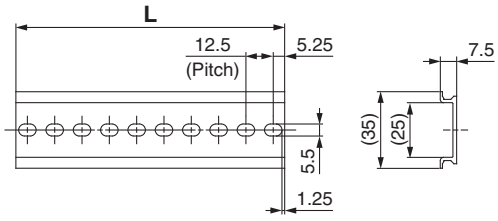

∗ For □, enter a number from the No. line in the table below.
Refer to the dimension drawings above for the mounting dimensions.

L Dimensions [mm]

No.	1	2	3	4	5	6	7	8	9	10	11	12	13	14
L	23	35.5	48	60.5	73	85.5	98	110.5	123	135.5	148	160.5	173	185.5
No.	15	16	17	18	19	20	21	22	23	24	25	26	27	28
L	198	210.5	223	235.5	248	260.5	273	285.5	298	310.5	323	335.5	348	360.5
No.	29	30	31	32	33	34	35	36	37	38	39	40		
L	373	385.5	398	410.5	423	435.5	448	460.5	473	485.5	498	510.5		

DIN rail mounting adapter
LEC-1-D0 (with 2 mounting screws)

This should be used when the DIN rail mounting adapter is mounted onto a screw mounting type controller afterward.

Wiring Example 1

Power Supply Connector: CN1

* When you connect a CN1 power supply connector, use the power supply cable (LEC-CK1-1).
* The power supply cable (LEC-CK1-1) is an accessory.

CN1 Power Supply Connector Terminal for LECP1

Terminal name	Cable colour	Function	Details
0V	Blue	Common supply (–)	M 24V terminal/C 24V terminal/BK RLS terminal are common (–).
M 24V	White	Motor power supply (+)	Motor power supply (+) supplied to the controller
C 24V	Brown	Control power supply (+)	Control power supply (+) supplied to the controller
BK RLS	Black	Lock release (+)	Input (+) for releasing the lock

Power supply cable for LECP1 (LEC-CK1-1)

Wiring Example 2

Parallel I/O Connector: CN4

* When you connect a PLC to the CN4 parallel I/O connector, use the I/O cable (LEC-CK4-□).
* The wiring changes depending on the type of parallel I/O (NPN or PNP).

■NPN

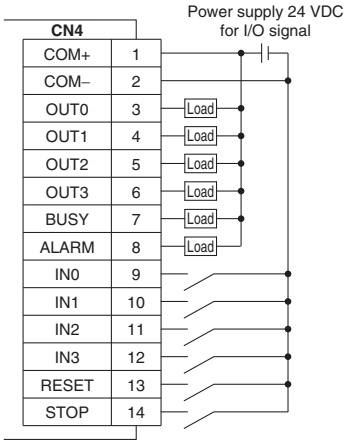

■PNP

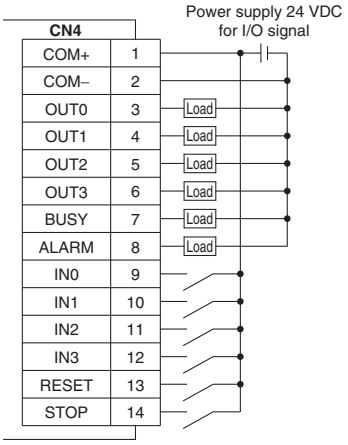

Input Signal

Name	Details
COM+	Connects the power supply 24 V for input/output signal
COM–	Connects the power supply 0 V for input/output signal
IN0 to IN3	• Instruction to drive (input as a combination of IN0 to IN3) • Instruction to return to origin (IN0 to IN3 all ON simultaneously) Example - (instruction to drive for position no. 5) IN3: OFF, IN2: ON, IN1: OFF, IN0: ON
RESET	Alarm reset and operation interruption During operation: deceleration stop from position at which signal is input (servo ON maintained) While alarm is active: alarm reset
STOP	Instruction to stop (after maximum deceleration stop, servo OFF)

Output Signal

Name	Details
OUT0 to OUT3	Turns on when the positioning or pushing is completed. (Output is instructed in the combination of OUT0 to 3.) Example - (operation complete for position no. 3) OUT3: OFF, OUT2: OFF, OUT1: ON, OUT0: ON
BUSY	Outputs when the actuator is moving
*ALARM*1	Not output when alarm is active or servo OFF

*1 Signal of negative-logic circuit (N.C.)

Input Signal [IN0 - IN3] Position Number Chart ○: OFF ●: ON

Position number	IN3	IN2	IN1	IN0
1	○	○	○	●
2	○	○	●	○
3	○	○	●	●
4	○	●	○	○
5	○	●	○	●
6	○	●	●	○
7	○	●	●	●
8	●	○	○	○
9	●	○	○	●
10 (A)	●	○	●	○
11 (B)	●	○	●	●
12 (C)	●	●	○	○
13 (D)	●	●	○	●
14 (E)	●	●	●	○
Return to origin	●	●	●	●

Output Signal [OUT0 - OUT3] Position Number Chart ○: OFF ●: ON

Position number	OUT3	OUT2	OUT1	OUT0
1	○	○	○	●
2	○	○	●	○
3	○	○	●	●
4	○	●	○	○
5	○	●	○	●
6	○	●	●	○
7	○	●	●	●
8	●	○	○	○
9	●	○	○	●
10 (A)	●	○	●	○
11 (B)	●	○	●	●
12 (C)	●	●	○	○
13 (D)	●	●	○	●
14 (E)	●	●	●	○
Return to origin	●	●	●	●

Signal Timing

(1) Return to Origin

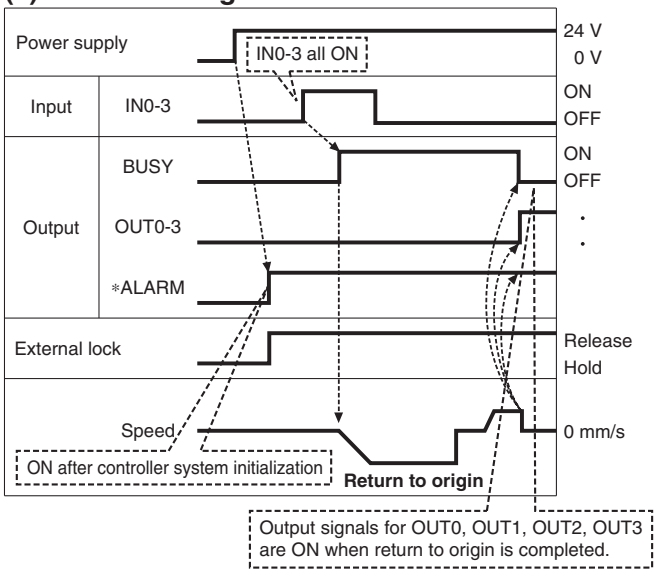

∗ "∗ALARM" is expressed as a negative-logic circuit.

(2) Positioning Operation

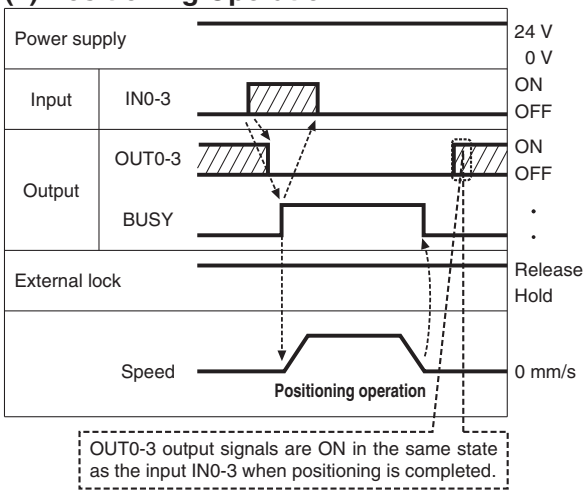

(3) Cut-off Stop (Reset Stop)

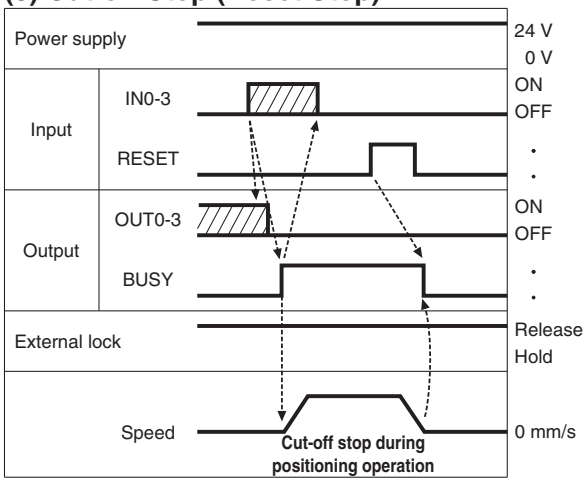

(4) Stop by the STOP Signal

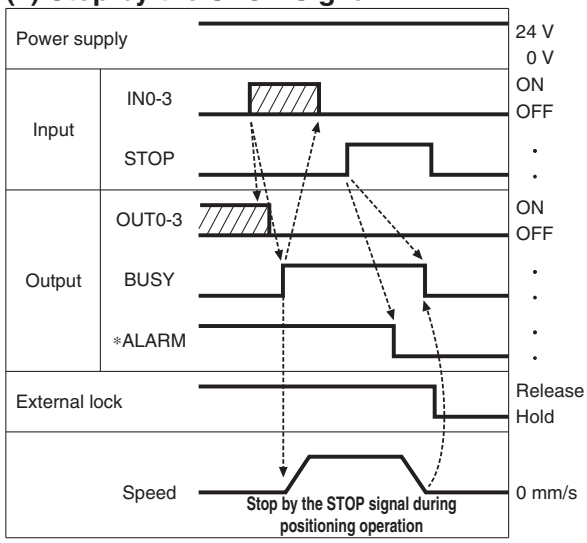

(5) Alarm Reset

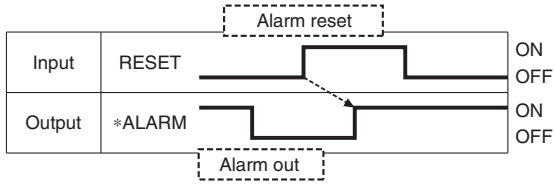

∗ "∗ALARM" is expressed as a negative-logic circuit.

Options: Actuator Cable

[Robotic cable, standard cable for step motor (Servo/24 VDC)]

LE – CP – 1 – ☐

Cable length (L) [m]

1	1.5
3	3
5	5
8	8*1
A	10*1
B	15*1
C	20*1

*1 Produced upon receipt of order (Robotic cable only)

Cable type

—	Robotic cable (Flexible cable)
S	Standard cable

Weight

Product no.	Weight [g]	Note
LE-CP-1-S	190	Standard cable
LE-CP-3-S	280	
LE-CP-5-S	460	
LE-CP-1	140	Robotic cable
LE-CP-3	260	
LE-CP-5	420	
LE-CP-8	790	
LE-CP-A	980	
LE-CP-B	1460	
LE-CP-C	1940	

LE-CP-$^{1}_{3}_{5}$/Cable length: 1.5 m, 3 m, 5 m

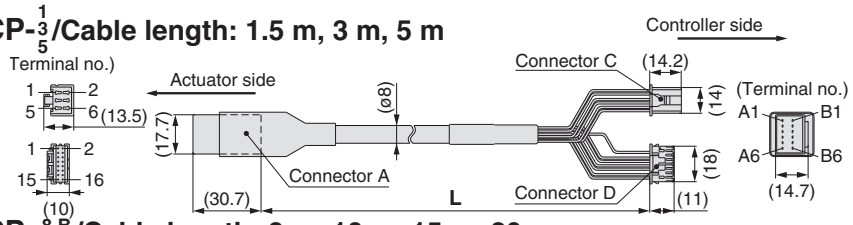

LE-CP-$^{8}_{A}$ $^{B}_{C}$/Cable length: 8 m, 10 m, 15 m, 20 m

(*1 Produced upon receipt of order)

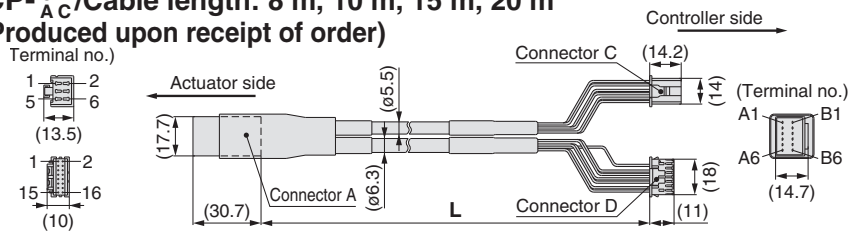

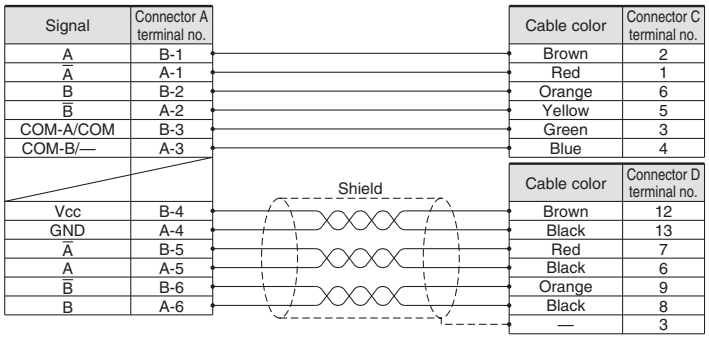

[Robotic cable, standard cable with lock and sensor for step motor (Servo/24 VDC)]

LE – CP – 1 – B – ☐

Cable length (L) [m]

1	1.5
3	3
5	5
8	8*1
A	10*1
B	15*1
C	20*1

*1 Produced upon receipt of order (Robotic cable only)

With lock and sensor

Cable type

—	Robotic cable (Flexible cable)
S	Standard cable

Weight

Product no.	Weight [g]	Note
LE-CP-1-B-S	240	Standard cable
LE-CP-3-B-S	380	
LE-CP-5-B-S	630	
LE-CP-1-B	190	Robotic cable
LE-CP-3-B	360	
LE-CP-5-B	590	
LE-CP-8-B	1060	
LE-CP-A-B	1320	
LE-CP-B-B	1920	
LE-CP-C-B	2620	

LE-CP-$^{1}_{3}_{5}$/Cable length: 1.5 m, 3 m, 5 m

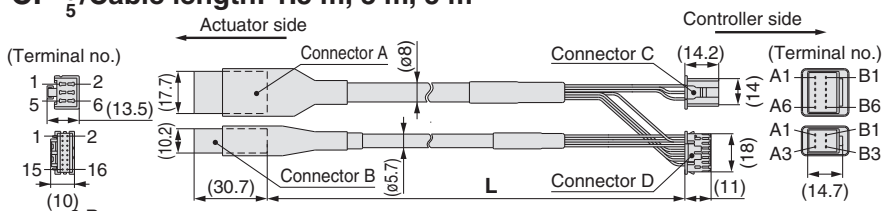

LE-CP-$^{8}_{A}$ $^{B}_{C}$/Cable length: 8 m, 10 m, 15 m, 20 m

(*1 Produced upon receipt of order)

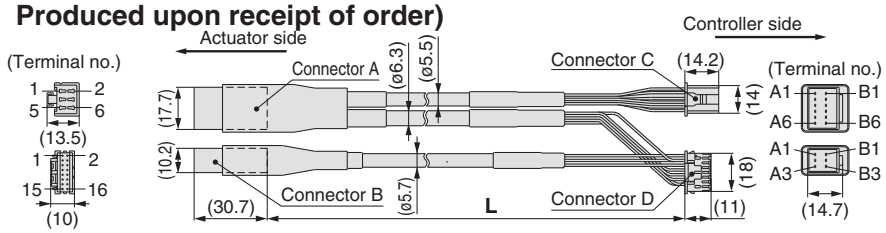

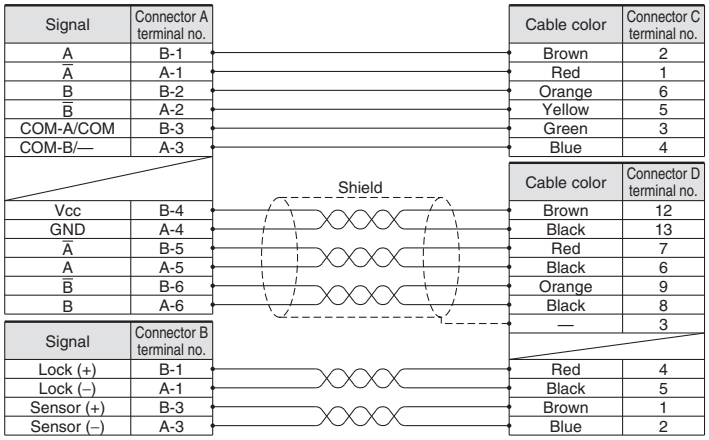

Options

[Power supply cable]

LEC−CK1−1

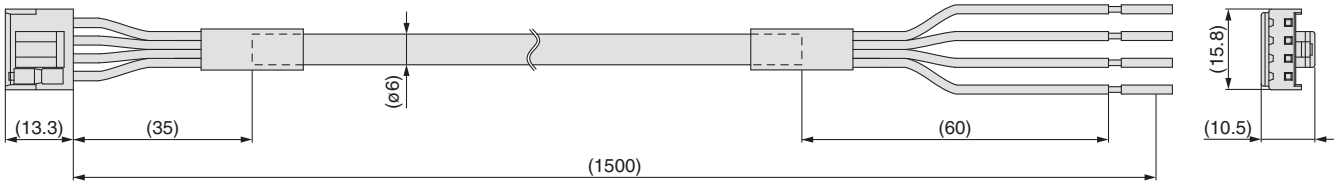

Terminal name	Covered colour	Function
0V	Blue	Common supply (–)
M 24V	White	Motor power supply (+)
C 24V	Brown	Control power supply (+)
BK RLS	Black	Lock release (+)

∗ Conductor size: AWG20

Weight: 90 g

[I/O cable]

LEC−CK4−□

Cable length (L) [m]

1	1.5
3	3
5	5

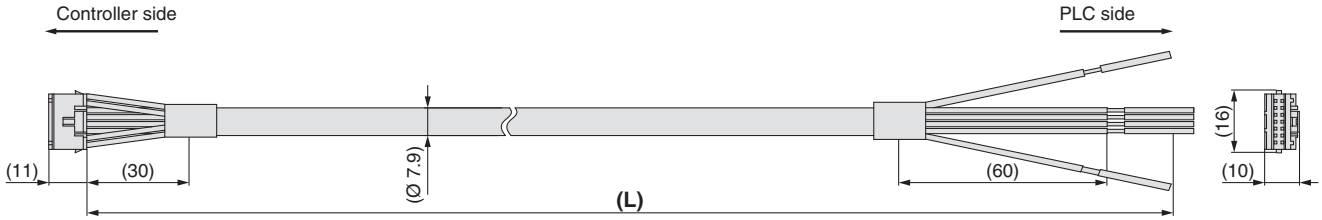

Terminal no.	Insulation colour	Dot mark	Dot colour	Function
1	Light brown	■	Black	COM+
2	Light brown	■	Red	COM–
3	Yellow	■	Black	OUT0
4	Yellow	■	Red	OUT1
5	Light green	■	Black	OUT2
6	Light green	■	Red	OUT3
7	Gray	■	Black	BUSY
8	Gray	■	Red	ALARM
9	White	■	Black	IN0
10	White	■	Red	IN1
11	Light brown	■ ■	Black	IN2
12	Light brown	■ ■	Red	IN3
13	Yellow	■ ■	Black	RESET
14	Yellow	■ ■	Red	STOP

∗ Conductor size: AWG26

Weight

Product no.	Weight [g]
LEC-CK4-1	100
LEC-CK4-3	200
LEC-CK4-5	330

∗ Parallel I/O signal is valid in auto mode. While the test function operates at manual mode, only the output is valid.

Step Motor Driver
LECPA Series

How to Order

⚠Caution

[CE-compliant products]

① EMC compliance was tested by combining the electric actuator LE series and the LECPA series. The EMC depends on the configuration of the customer's control panel and the relationship with other electrical equipment and wiring. Therefore, compliance with the EMC directive cannot be certified for SMC components incorporated into the customer's equipment under actual operating conditions. As a result, it is necessary for the customer to verify compliance with the EMC directive for the machinery and equipment as a whole.

② For the LECPA series (step motor driver), EMC compliance was tested by installing a noise filter set (LEC-NFA).
Refer to page 220 for the noise filter set. Refer to the LECPA Operation Manual for installation.

[UL-compliant products]

When compliance with UL is required, the electric actuator and driver should be used with a UL1310 Class 2 power supply.

LECP AP 1 □ – LEY16B-100

Driver type

AN	Pulse input type (NPN)
AP	Pulse input type (PNP)

I/O cable length [m]

—	None
1	1.5
3	3*1
5	5*1

*1 Pulse input usable only with differential. Only 1.5 m cables usable with open collector.

Driver mounting

—	Screw mounting
D*1	DIN rail

*1 The DIN rail is not included. Order it separately.

Actuator part number

Without cable specifications and actuator options
Example: Enter "LEY16B-100"
for the LEY16B-100B-R16N1.

BC	Blank controller*1

*1 Requires dedicated software (LEC-BCW)

* When controller equipped type is selected when ordering the LE series, you do not need to order this driver.
* When pulse signals are open collector, order the current limiting resistor (LEC-PA-R-□) separately.

The driver is sold as single unit after the compatible actuator is set.

Confirm that the combination of the driver and actuator is correct.

<Check the following before use.>

① Check the actuator label for the model number. This number should match that of the driver.

② Check that the Parallel I/O configuration matches (NPN or PNP).

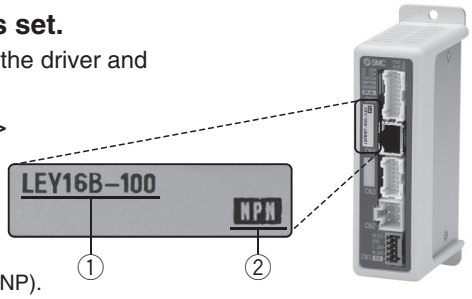

* Refer to the operation manual for using the products. Please download it via our website, https://www.smc.eu

Precautions for blank controllers (LECPA□□-BC)

A blank controller is a controller to which the customer can write the data of the actuator it is to be combined and used with. Use the dedicated software (LEC-BCW) for data writing.

- Please download the dedicated software (LEC-BCW) via our website.
- Order the communication cable for controller setting (LEC-W2A-C) separately to use this software.

SMC website
https://www.smc.eu

Specifications

Item	LECPA
Compatible motor	Step motor (Servo/24 VDC)
Power supply*1	Power voltage: 24 VDC ±10 %*2 [Including motor drive power, control power, stop, lock release]
Parallel input	5 inputs (Except photo-coupler isolation, pulse input terminal, COM terminal)
Parallel output	9 outputs (Photo-coupler isolation)
Pulse signal input	Maximum frequency: 60 kpps (Open collector), 200 kpps (Differential) Input method: 1 pulse mode (Pulse input in direction), 2 pulse mode (Pulse input in differing directions)
Compatible encoder	Incremental A/B phase (Encoder resolution: 800 pulse/rotation)
Serial communication	RS485 (Modbus protocol compliant)
Memory	EEPROM
LED indicator	LED (Green/Red) one of each
Lock control	Forced-lock release terminal*3
Cable length [m]	I/O cable: 1.5 or less (Open collector), 5 or less (Differential), Actuator cable: 20 or less
Cooling system	Natural air cooling
Operating temperature range [°C]	0 to 40 (No freezing)
Operating humidity range [%RH]	90 or less (No condensation)
Storage temperature range [°C]	−10 to 60 (No freezing)
Storage humidity range [%RH]	90 or less (No condensation)
Insulation resistance [MΩ]	Between the housing and SG terminal: 50 (500 VDC)
Weight [g]	120 (Screw mounting), 140 (DIN rail mounting)

*1 Do not use the power supply of "inrush current prevention type" for the driver power supply. When compliance with UL is required, the electric actuator and driver should be used with a UL1310 Class 2 power supply.

*2 The power consumption changes depending on the actuator model. Refer to the specifications of actuator for more details.

*3 Applicable to non-magnetising locks

How to Mount

a) Screw mounting (LECPA□□-□) (Installation with two M4 screws)

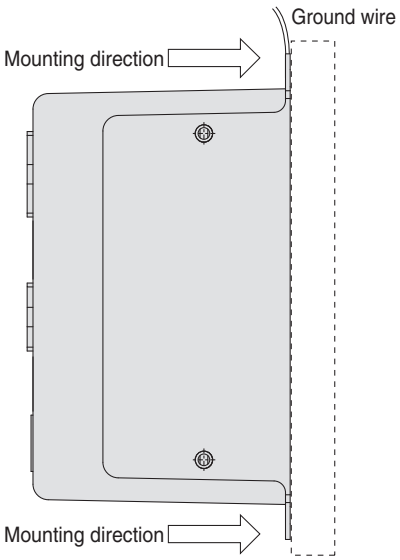

b) DIN rail mounting (LECPA□□D-□) (Installation with the DIN rail)

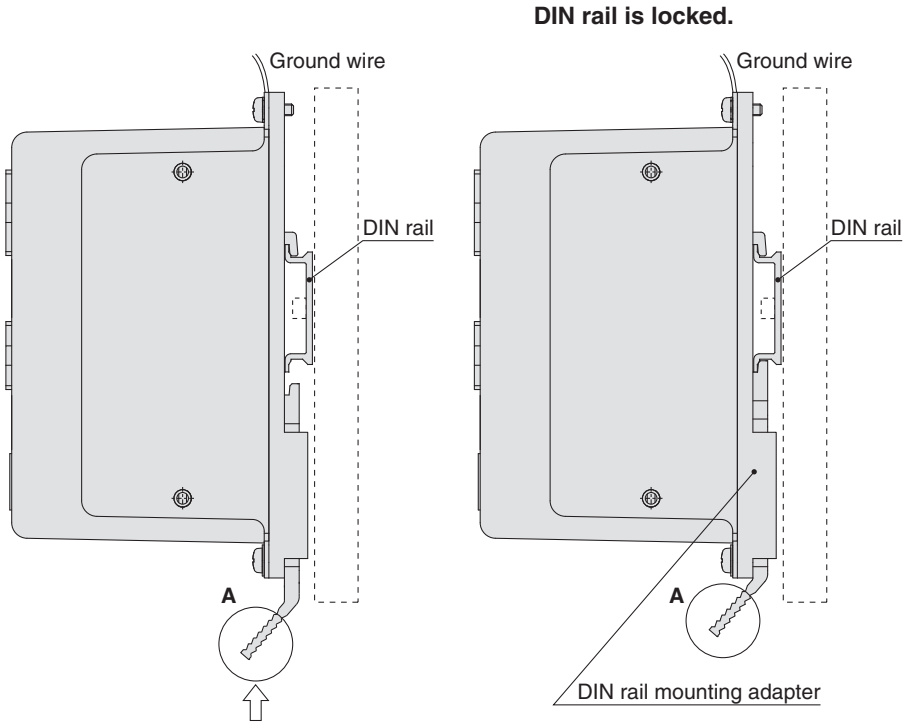

Hook the driver on the DIN rail and press the lever of section **A** in the arrow direction to lock it.

∗ The space between the drivers should be 10 mm or more.

DIN rail
AXT100-DR-□

∗ For □, enter a number from the No. line in the table below.
Refer to the dimension drawings on page 216 for the mounting dimensions.

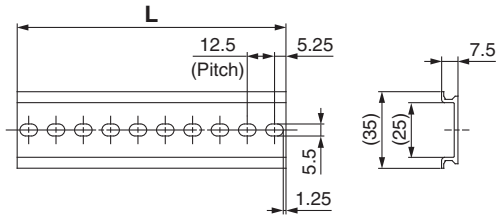

L Dimensions [mm]

No.	1	2	3	4	5	6	7	8	9	10	11	12	13	14	15	16	17	18	19	20
L	23	35.5	48	60.5	73	85.5	98	110.5	123	135.5	148	160.5	173	185.5	198	210.5	223	235.5	248	260.5
No.	21	22	23	24	25	26	27	28	29	30	31	32	33	34	35	36	37	38	39	40
L	273	285.5	298	310.5	323	335.5	348	360.5	373	385.5	398	410.5	423	435.5	448	460.5	473	485.5	498	510.5

DIN rail mounting adapter
LEC-2-D0 (with 2 mounting screws)

This should be used when the DIN rail mounting adapter is mounted onto a screw mounting type driver afterward.

Dimensions

a) Screw mounting (LECPA□□-□)

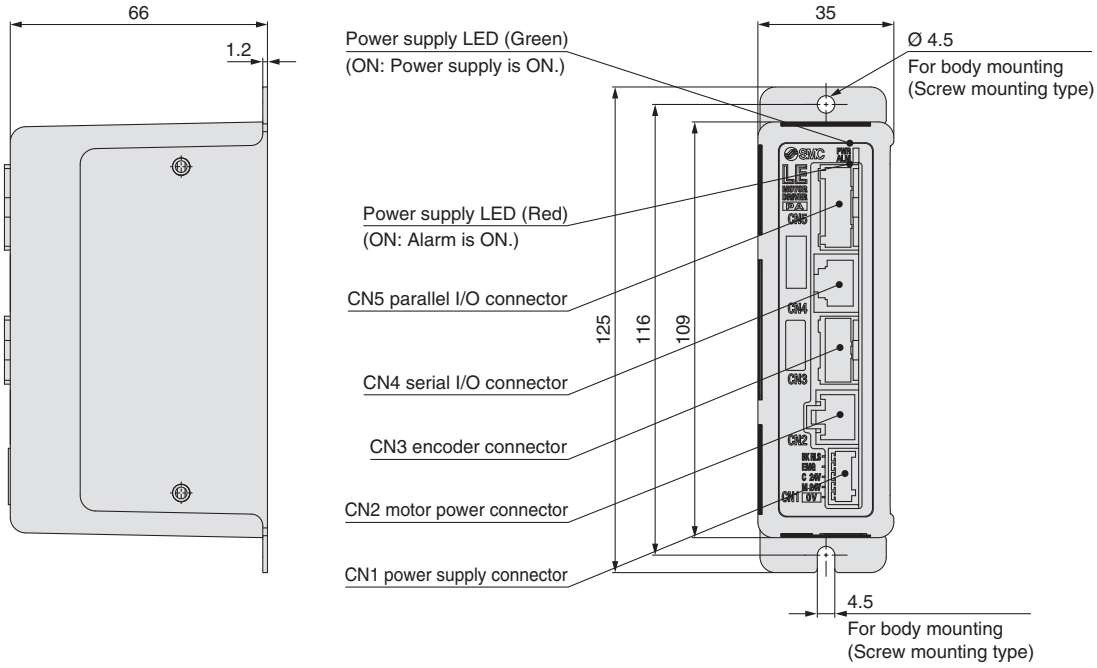

b) DIN rail mounting (LECPA□□D-□)

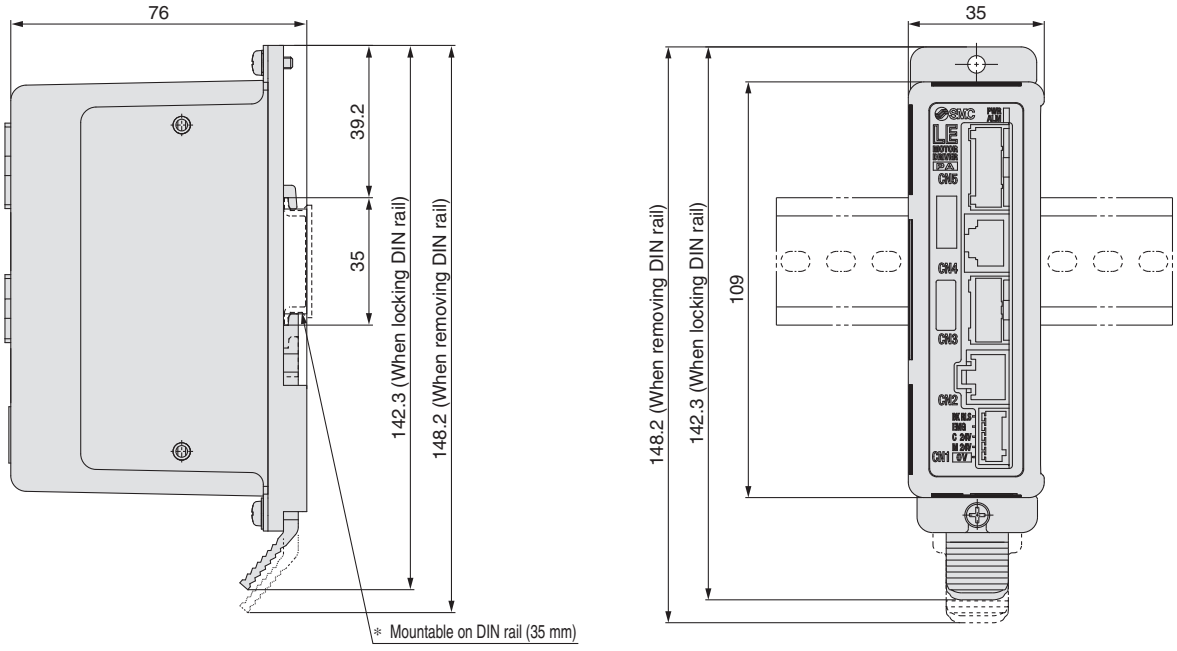

Wiring Example 1

Power Supply Connector: CN1

* The power supply plug is an accessory.
<Applicable cable size> AWG20 (0.5 mm^2), cover diameter 2.0 mm or less

CN1 Power Supply Connector Terminal for LECPA (PHOENIX CONTACT FK-MC0.5/5-ST-2.5)

Terminal name	Function	Details
0V	Common supply (–)	M 24V terminal/C 24V terminal/EMG terminal/BK RLS terminal are common (–).
M 24V	Motor power supply (+)	Motor power supply (+) supplied to the driver
C 24V	Control power supply (+)	Control power supply (+) supplied to the driver
EMG	Stop (+)	Input (+) for releasing the stop
BK RLS	Lock release (+)	Input (+) for releasing the lock

Power supply plug for LECPA: LEC-D-1-1

* Accessory

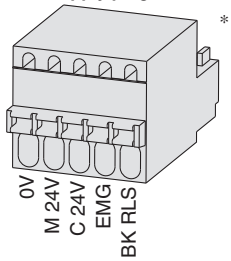

Wiring Example 2

Parallel I/O Connector: CN5

* When you connect a PLC to the CN5 parallel I/O connector, use the I/O cable (LEC-CL5-□).
* The wiring changes depending on the type of parallel I/O (NPN or PNP).

LECPAN□□-□ (NPN)

CN5		
Terminal name	Function	Pin no.
COM+	24 V	1
COM–	0 V	2
NP+	Pulse signal	3
NP–	Pulse signal	4
PP+	Pulse signal	5
PP–	Pulse signal	6
SETUP	Input	7
RESET	Input	8
SVON	Input	9
CLR	Input	10
TL	Input	11
TLOUT	Output	12
WAREA	Output	13
BUSY	Output	14
SETON	Output	15
INP	Output	16
SVRE	Output	17
*ESTOP*2	Output	18
*ALARM*2	Output	19
AREA	Output	20
FG	Round terminal 0.5-5	

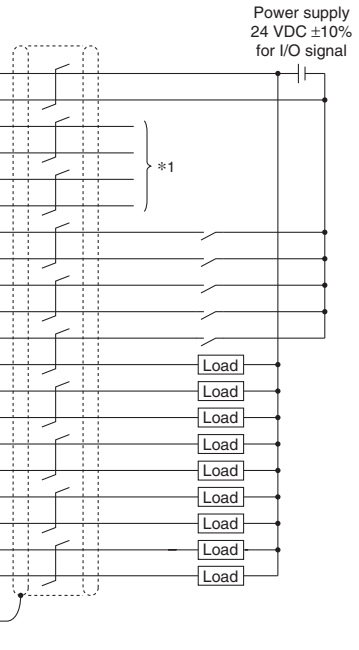

LECPAP□□-□ (PNP)

CN5		
Terminal name	Function	Pin no.
COM+	24 V	1
COM–	0 V	2
NP+	Pulse signal	3
NP–	Pulse signal	4
PP+	Pulse signal	5
PP–	Pulse signal	6
SETUP	Input	7
RESET	Input	8
SVON	Input	9
CLR	Input	10
TL	Input	11
TLOUT	Output	12
WAREA	Output	13
BUSY	Output	14
SETON	Output	15
INP	Output	16
SVRE	Output	17
*ESTOP*2	Output	18
*ALARM*2	Output	19
AREA	Output	20
FG	Round terminal 0.5-5	

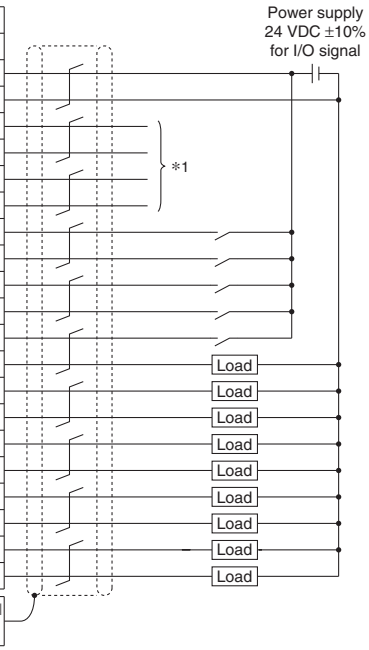

*1 For pulse signal wiring method, refer to "Pulse Signal Wiring Details".
*2 Output when the power supply of the driver is ON. (N.C.)

Input Signal

Name	Details
COM+	Connects the power supply 24 V for input/output signal
COM–	Connects the power supply 0 V for input/output signal
SETUP	Instruction to return to origin
RESET	Alarm reset
SVON	Servo ON instruction
CLR	Deviation reset
TL	Instruction to pushing operation

Output Signal

Name	Details
BUSY	Outputs when the actuator is operating
SETON	Outputs when returning to origin
INP	Outputs when target position is reached
SVRE	Outputs when servo is on
*ESTOP*3	Not output when EMG stop is instructed
*ALARM*3	Not output when alarm is generated
AREA	Outputs within the area output setting range
WAREA	Outputs within W-AREA output setting range
TLOUT	Outputs during pushing operation

*3 Signal of negative-logic circuit ON (N.C.)

Pulse Signal Wiring Details

•Pulse signal output of positioning unit is differential output

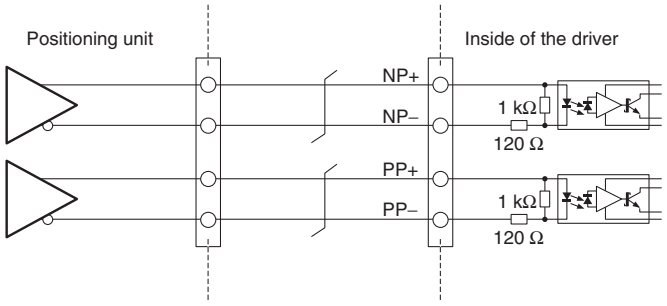

•Pulse signal output of positioning unit is open collector output

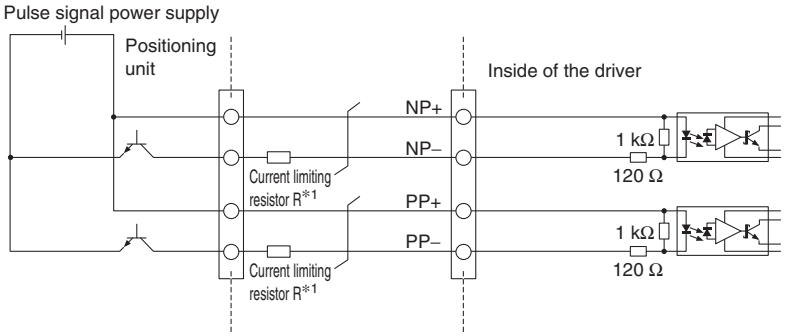

*1 Connect the current limiting resistor R in series to correspond to the pulse signal voltage.

Pulse signal power supply voltage	Current limiting resistor R specifications	Current limiting resistor part no.
24 VDC ±10 %	3.3 kΩ ±5 % (0.5 W or more)	LEC-PA-R-332
5 VDC ±5 %	390 Ω ±5 % (0.1 W or more)	LEC-PA-R-391

Signal Timing

Return to Origin

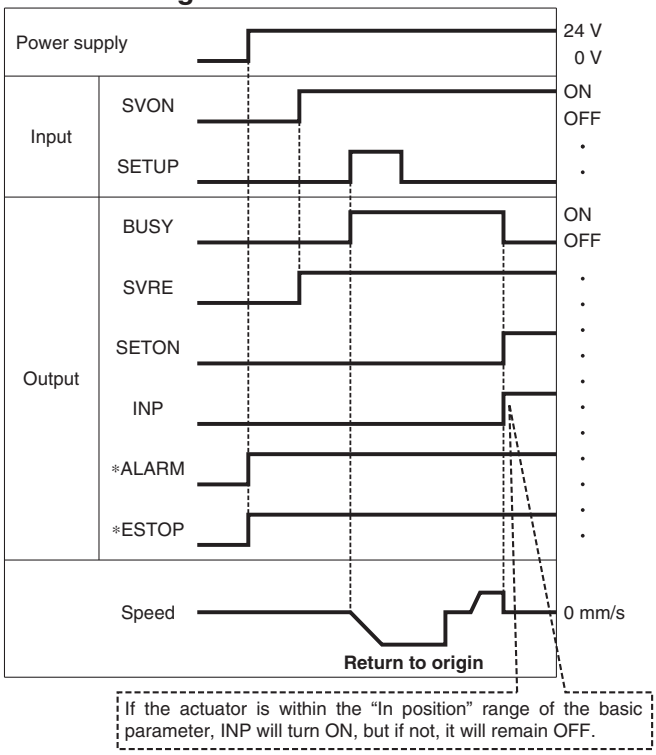

∗ "∗ALARM" and "∗ESTOP" are expressed as negative-logic circuits.

Positioning Operation

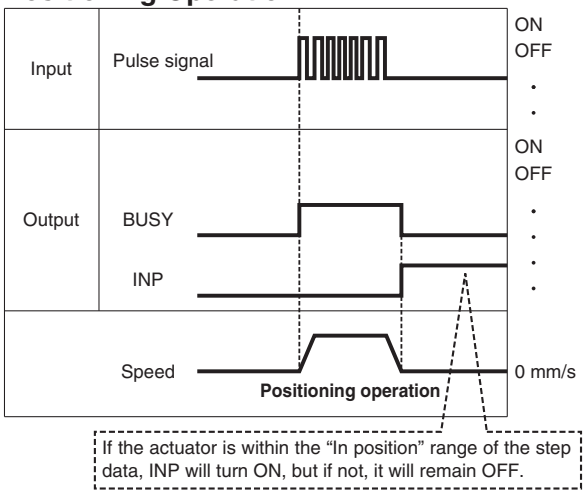

Pushing Operation

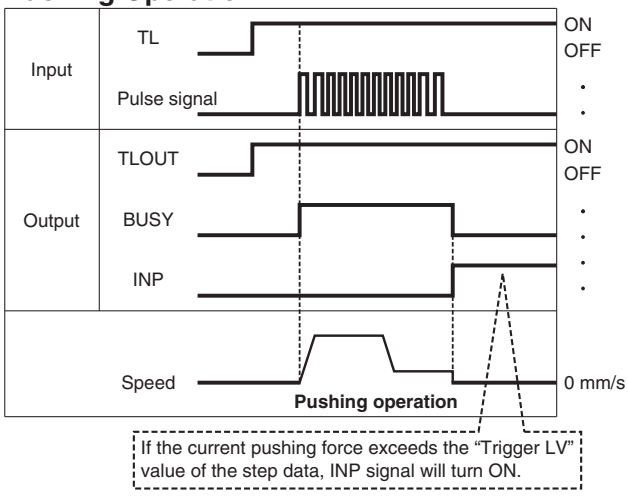

∗ If pushing operation is stopped when there is no pulse deviation, the moving part of the actuator may pulsate.

Alarm Reset

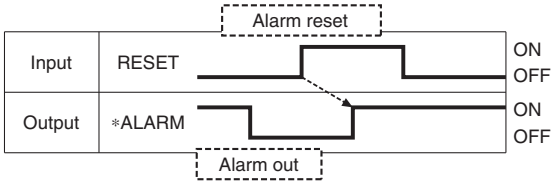

∗ "∗ALARM" is expressed as a negative-logic circuit.

Options: Actuator Cable

[Robotic cable, standard cable for step motor (Servo/24 VDC)]

LE – CP – 1 – ☐

Cable length (L) [m]

1	1.5
3	3
5	5
8	8*1
A	10*1
B	15*1
C	20*1

*1 Produced upon receipt of order (Robotic cable only)

Cable type

—	Robotic cable (Flexible cable)
S	Standard cable

LE-CP-1 3 5/Cable length: 1.5 m, 3 m, 5 m

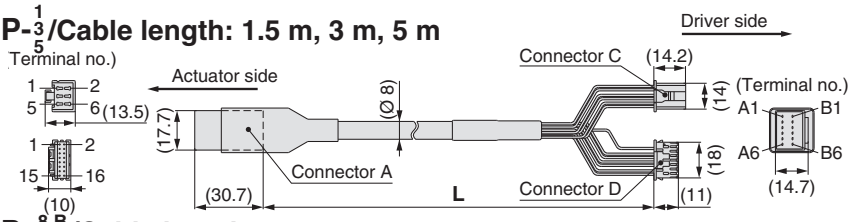

LE-CP-8 B A C/Cable length: 8 m, 10 m, 15 m, 20 m

(*1 Produced upon receipt of order)

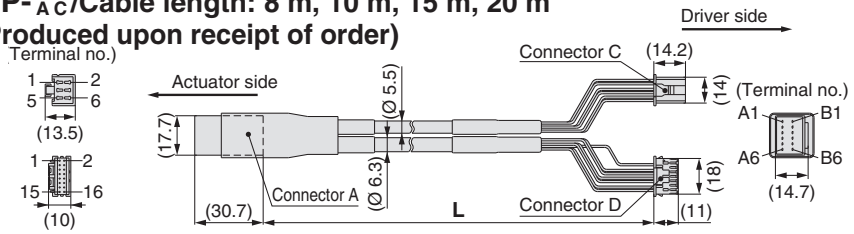

Weight

Product no.	Weight [g]	Note
LE-CP-1-S	190	Standard cable
LE-CP-3-S	280	
LE-CP-5-S	460	
LE-CP-1	140	Robotic cable
LE-CP-3	260	
LE-CP-5	420	
LE-CP-8	790	
LE-CP-A	980	
LE-CP-B	1460	
LE-CP-C	1940	

Signal	Connector A terminal no.
A	B-1
$\overline{A}$	A-1
B	B-2
$\overline{B}$	A-2
COM-A/COM	B-3
COM-B/—	A-3
Vcc	B-4
GND	A-4
$\overline{A}$	B-5
A	A-5
$\overline{B}$	B-6
B	A-6

Shield

Cable color	Connector C terminal no.
Brown	2
Red	1
Orange	6
Yellow	5
Green	3
Blue	4

Cable color	Connector D terminal no.
Brown	12
Black	13
Red	7
Black	6
Orange	9
Black	8
—	3

[Robotic cable, standard cable with lock and sensor for step motor (Servo/24 VDC)]

LE – CP – 1 – B – ☐

Cable length (L) [m]

1	1.5
3	3
5	5
8	8*1
A	10*1
B	15*1
C	20*1

*1 Produced upon receipt of order (Robotic cable only)

With lock and sensor

Cable type

—	Robotic cable (Flexible cable)
S	Standard cable

LE-CP-1 3 5/Cable length: 1.5 m, 3 m, 5 m

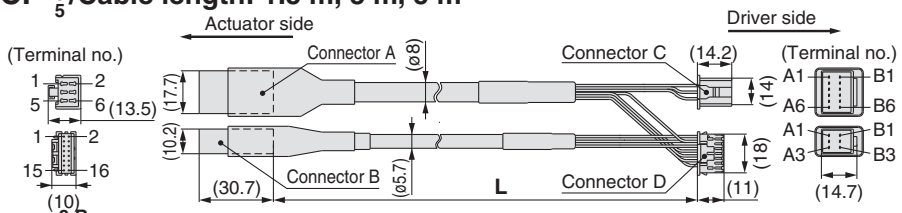

LE-CP-8 B A C/Cable length: 8 m, 10 m, 15 m, 20 m

(*1 Produced upon receipt of order)

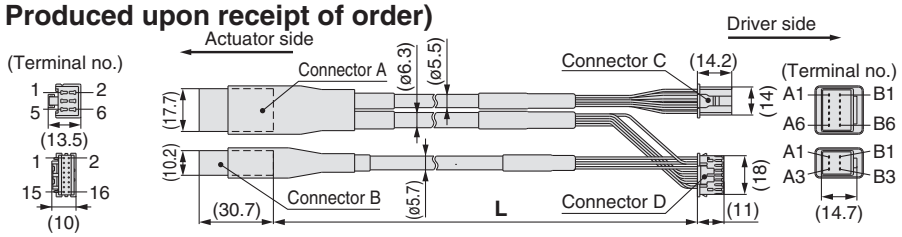

Weight

Product no.	Weight [g]	Note
LE-CP-1-B-S	240	Standard cable
LE-CP-3-B-S	380	
LE-CP-5-B-S	630	
LE-CP-1-B	190	Robotic cable
LE-CP-3-B	360	
LE-CP-5-B	590	
LE-CP-8-B	1060	
LE-CP-A-B	1320	
LE-CP-B-B	1920	
LE-CP-C-B	2620	

Signal	Connector A terminal no.
A	B-1
$\overline{A}$	A-1
B	B-2
$\overline{B}$	A-2
COM-A/COM	B-3
COM-B/—	A-3
Vcc	B-4
GND	A-4
$\overline{A}$	B-5
A	A-5
$\overline{B}$	B-6
B	A-6

Shield

Cable color	Connector C terminal no.
Brown	2
Red	1
Orange	6
Yellow	5
Green	3
Blue	4

Cable color	Connector D terminal no.
Brown	12
Black	13
Red	7
Black	6
Orange	9
Black	8
—	3

Signal	Connector B terminal no.
Lock (+)	B-1
Lock (–)	A-1
Sensor (+)	B-3
Sensor (–)	A-3

Red	4
Black	5
Brown	1
Blue	2

Options

[I/O cable]

LEC-C L5-1

I/O cable type

L5	For LECPA

I/O cable length (L)

1	1.5 m
3	3 m*1
5	5 m*1

*1 Pulse input usable only with differential. Only 1.5 m cables usable with open collector

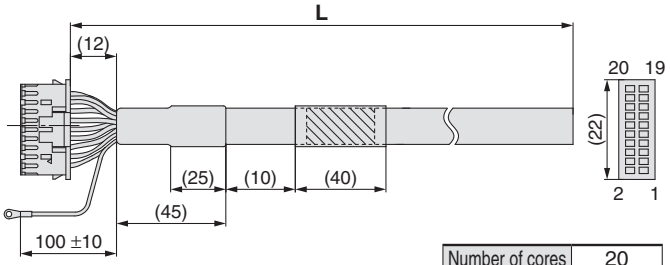

Number of cores	20
AWG size	24

Pin no.	Insulation colour	Dot mark	Dot colour
1	Light brown	■	Black
2	Light brown	■	Red
3	Yellow	■	Black
4	Yellow	■	Red
5	Light green	■	Black
6	Light green	■	Red
7	Gray	■	Black
8	Gray	■	Red
9	White	■	Black
10	White	■	Red
11	Light brown	■■	Black

Pin no.	Insulation colour	Dot mark	Dot colour
12	Light brown	■■	Red
13	Yellow	■■	Black
14	Yellow	■■	Red
15	Light green	■■	Black
16	Light green	■■	Red
17	Gray	■■	Black
18	Gray	■■	Red
19	White	■■	Black
20	White	■■	Red
Round terminal 0.5-5	Green		

Weight

Product no.	Weight [g]
LEC-CL5-1	190
LEC-CL5-3	370
LEC-CL5-5	610

[Noise filter set]
Step Motor Driver (Pulse Input Type)

LEC-NFA

Contents of the set: 2 noise filters
(Manufactured by WURTH ELEKTRONIK: 74271222)

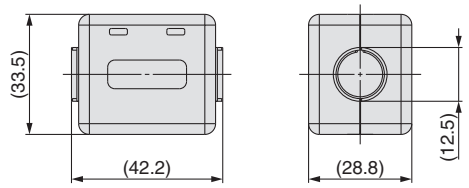

* Refer to the LECPA series Operation Manual for installation.

[Current limiting resistor]

This optional resistor (LEC-PA-R-□) is used when the pulse signal output of the positioning unit is open collector output.

LEC-PA-R-□

Current limiting resistor

Symbol	Resistance	Pulse signal power supply voltage
332	3.3 kΩ ±5 %	24 VDC ±10 %
391	390 Ω ±5 %	5 VDC ±5 %

* Select a current limiting resistor that corresponds to the pulse signal power supply voltage.
* For the LEC-PA-R-□, two pieces are shipped as a set.
* For pulse signal wiring details, refer to page 217.

LEC Series
Communication Cable for Controller Setting/LEC-W2A-□

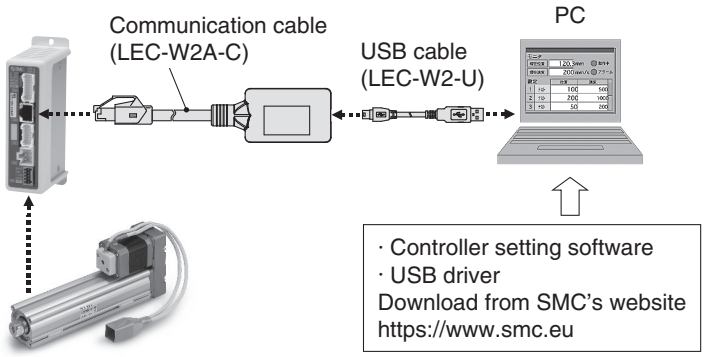

· Controller setting software
· USB driver
Download from SMC's website
https://www.smc.eu

How to Order

LEC-W2A-C
C: Communication cable

LEC-W2-U
U: USB cable

Compatible Controller/Driver

Step data input type	**PLECA6 Series**
Pulse input type	**LECPA Series**
PStep Motor Controller	**JXCE1/91/P1/D1/L1 Series**

∗ When connecting to a JXCE1/91/P1/D1/L1 series product, use a conversion cable (P5062-5) as a relay.

Hardware Requirements

OS	Windows®7, Windows®8.1, Windows®10
Communication interface	USB 1.1 or USB 2.0 ports
Display	1024 x 768 or more

∗ Windows®7, Windows®8.1 and Windows®10 are registered trademarks of Microsoft Corporation in the United States.

Screen Example

Easy mode screen example

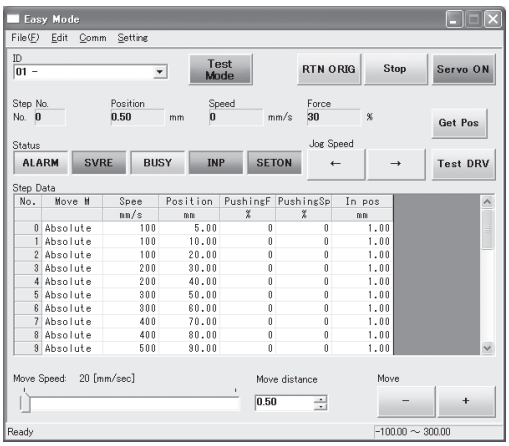

Easy operation and simple setting
- Allowing to set and display actuator step data such as position, speed, force, etc.
- Setting of step data and test drive can be performed on the same page.
- Can be used to jog and move at a constant rate

Normal mode screen example

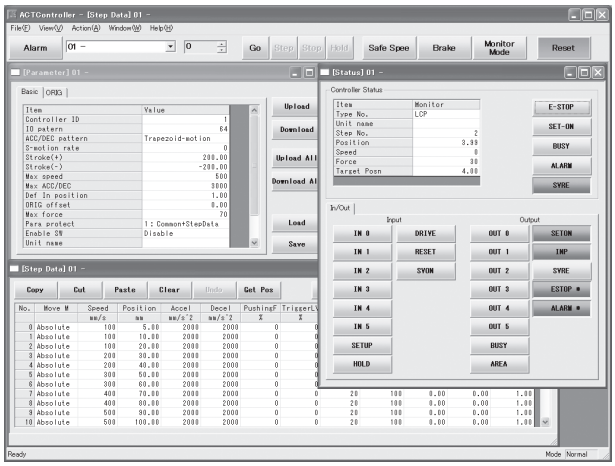

Detailed setting
- Step data can be set in detail.
- Signals and terminal status can be monitored.
- Parameters can be set.
- JOG and constant rate movement, return to origin, test drive and testing of forced output can be performed.

LEC Series
Teaching Box/LEC-T1

How to Order

LEC-T1-3EG

Teaching box

Cable length [m]

3	3

Initial language

J	Japanese
E	English

∗ The displayed language can be changed to English or Japanese.

Stop switch

G	Equipped with stop switch

Enable switch

—	None
S	Equipped with enable switch

∗ Interlock switch for jog and test function

Standard functions
- **Chinese character display**
- **Stop switch is provided.**

Option
- **Enable switch is provided.**

Specifications

Item	Description
Switch	Stop switch, Enable switch (Option)
Cable length [m]	3
Enclosure	IP64 (Except connector)
Operating temperature range [°C]	5 to 50
Operating humidity range [%RH]	90 or less (No condensation)
Weight [g]	350 (Except cable)

[CE-compliant products]
The EMC compliance of the teaching box was tested with a step motor controller (servo/24 VDC) and an applicable actuator.
[UL-compliant products]
When compliance with UL is required, the electric actuator and driver should be used with a UL1310 Class 2 power supply.

Easy Mode

Function	Details
Step data	• Setting of step data
Jog	• Jog operation • Return to origin
Test	• 1 step operation*1 • Return to origin
Monitor	• Display of axis and step data no. • Display of two items selected from Position, Speed, Force.
ALM	• Active alarm display • Alarm reset
TB setting	• Reconnection of axis (Ver. 1.∗∗) • Displayed language setting (Ver. 2.∗∗) • Setting of easy/normal mode • Setting step data and selection of items from easy mode monitor

Menu Operations Flowchart

Menu
- Data
- Monitor
- Jog
- Test
- ALM
- TB setting

Data
Step data no.
Setting of two items selected below
Ver. 1.∗∗:
Position, Speed, Force, Acceleration, Deceleration
Ver. 2.∗∗:
Position, Speed, Pushing force, Acceleration, Deceleration, Movement MOD, Trigger LV, Pushing speed, Moving force, Area 1, Area 2, In position

Monitor
Display of step no.
Display of two items selected below
(Position, Speed, Force)

Jog
Return to origin
Jog operation

Test*1
1 step operation

ALM
Active alarm display
Alarm reset

TB setting
Reconnect (Ver. 1.∗∗)
Japanese/English (Ver. 2.∗∗)
Easy/Normal
Set item

∗1 Not compatible with the LECPA

Normal Mode

Function	Details
Step data	• Step data setting
Parameter	• Parameters setting
Test	• Jog operation/Constant rate movement • Return to origin • Test drive*1 (Specify a maximum of 5 step data and operate.) • Forced output (Forced signal output, Forced terminal output)*2
Monitor	• Drive monitor • Output signal monitor*2 • Input signal monitor*2 • Output terminal monitor • Input terminal monitor
ALM	• Active alarm display (Alarm reset) • Alarm log record display
File	• Data saving Save the step data and parameters of the driver which is being used for communication (it is possible to save four files, with one set of step data and parameters defined as one file). • Load to driver Loads the data which is saved in the teaching box to the driver which is being used for communication. • Delete the saved data. • File protection (Ver. 2.**)
TB setting	• Display setting (Easy/Normal mode) • Language setting (Japanese/English) • Backlight setting • LCD contrast setting • Beep sound setting • Max. connection axis • Distance unit (mm/inch)
Reconnect	• Reconnection of axis

Menu Operations Flowchart

- **Menu**: Step data / Parameter / Monitor / Test / ALM / File / TB setting / Reconnect
- **Step data**: Step data no. / Movement MOD / Speed / Position / Acceleration / Deceleration / Pushing force / Trigger LV / Pushing speed / Moving force / Area 1, 2 / In position
- **Parameter**: Basic / ORIG
  - **Basic setting**
  - **ORIG setting**
- **Monitor**: Drive / Output signal*2 / Input signal*2 / Output terminal / Input terminal
  - **DRV monitor**: Position, Speed, Torque / Step no. / Last step no.
  - **Output signal monitor**
  - **Input signal monitor**
  - **Output terminal monitor**
  - **Input terminal monitor**
- **Test**: JOG/MOVE / Return to ORIG / Test drive*1 / Forced output*2
- **ALM**: Status / ALM Log record
  - **Status**: Active alarm display / Alarm reset
  - **ALM Log record display**: Log entry display
- **File**: Data saving / Load to driver / File deletion / File protection (Ver. 2.**)
- **TB setting**: Easy/Normal / Language / Backlight / LCD contrast / Beep / Max. connection axis / Password / Distance unit
- **Reconnect**

*1 Not compatible with the LECPA

*2 The following signals are compatible with LECPA with TB Ver. 2.10 or newer.
Input: CLR, TL
Output: TLOUT

Dimensions

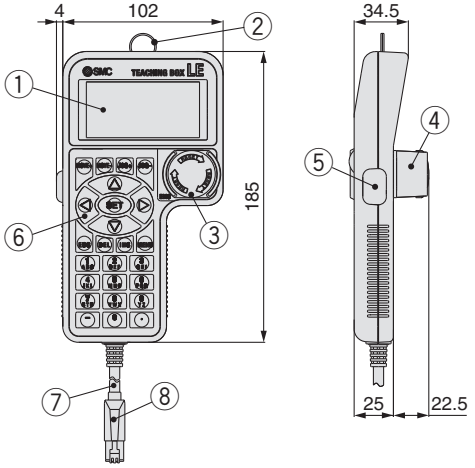

No.	Description	Function
1	**LCD**	A screen of liquid crystal display (with backlight)
2	**Ring**	A ring for hanging the teaching box
3	**Stop switch**	When switch is pushed in, the switch locks and stops. The lock is released when it is turned to the right.
4	**Stop switch guard**	A guard for the stop switch
5	**Enable switch (Option)**	Prevents unintentional operation (unexpected operation) of the jog test function. Other functions such as data change are not covered.
6	**Key switch**	Switch for each input
7	**Cable**	Length: 3 meters
8	**Connector**	A connector connected to CN4 of the driver

Step Motor Controller

JXCE1/91/P1/D1/L1 Series

How to Order

JXC D 1 7 T –

Communication protocol

E	EtherCAT®
9	EtherNet/IP™
P	PROFINET
D	DeviceNet™
L	IO-Link

For single axis

Mounting

7	Screw mounting
8*1	DIN rail

*1 The DIN rail is not included. It must be ordered separately. (Refer to page 229.)

Option

—	Without option
S	With straight type DeviceNet™ communication plug for JXCD1
T	With T-branch type DeviceNet™ communication plug for JXCD1

* Select "—" for anything other than JXCD1.

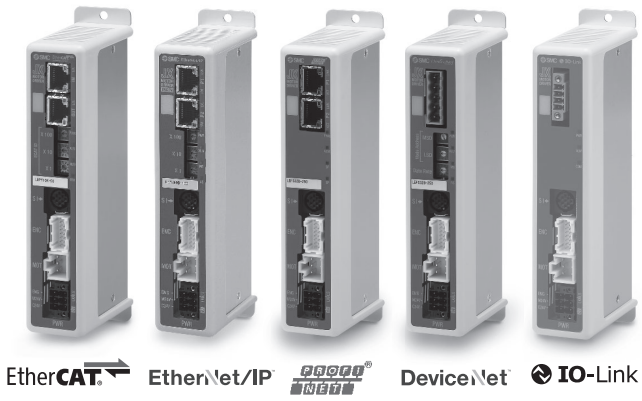

Actuator part number

Without cable specifications and actuator options Example: Enter "LEY16B-100" for the LEY16B-100B-R16N1.	
BC	Blank controller*1

*1 Requires dedicated software (JXC-BCW)

The controller is sold as single unit after the compatible actuator is set.

Confirm that the combination of the controller and actuator is correct.

① Check the actuator label for the model number. This number should match that of the controller.

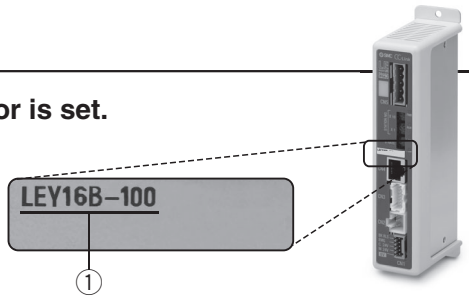

* Refer to the operation manual for using the products. Please download it via our website, https://www.smc.eu

Precautions for blank controllers (JXC□1□□-BC)

A blank controller is a controller to which the customer can write the data of the actuator it is to be combined and used with. Use the dedicated software (JXC-BCW) for data writing.

- Please download the dedicated software (JXC-BCW) via our website.
- Order the controller setting kit (JXC-W2) separately to use this software.

SMC website: https://www.smc.eu

Specifications

Model			JXCE1	JXC91	JXCP1	JXCD1	JXCL1
Network			EtherCAT®	EtherNet/IP™	PROFINET	DeviceNet™	IO-Link
Compatible motor			Step motor (Servo/24 VDC)				
Power supply			Power voltage: 24 VDC ±10 %				
Current consumption (Controller)			200 mA or less	130 mA or less	200 mA or less	100 mA or less	100 mA or less
Compatible encoder			Incremental A/B phase (800 pulse/rotation)				
Communication specifications	Applicable system	Protocol	EtherCAT®*2	EtherNet/IP™*2	PROFINET*2	DeviceNet™	IO-Link
		Version*1	Conformance Test Record V.1.2.6	Volume 1 (Edition 3.14) Volume 2 (Edition 1.15)	Specification Version 2.32	Volume 1 (Edition 3.14) Volume 3 (Edition 1.13)	Version 1.1 Port Class A
	Communication speed		100 Mbps*2	10/100 Mbps*2 (Automatic negotiation)	100 Mbps*2	125/250/500 kbps	230.4 kbps (COM3)
	Configuration file*3		ESI file	EDS file	GSDML file	EDS file	IODD file
	I/O occupation area		Input 20 bytes Output 36 bytes	Input 36 bytes Output 36 bytes	Input 36 bytes Output 36 bytes	Input 4, 10, 20 bytes Output 4, 12, 20, 36 bytes	Input 14 bytes Output 22 bytes
	Terminating resistor		Not included				
Memory			EEPROM				
LED indicator			PWR, RUN, ALM, ERR	PWR, ALM, MS, NS	PWR, ALM, SF, BF	PWR, ALM, MS, NS	PWR, ALM, COM
Cable length [m]			Actuator cable: 20 or less				
Cooling system			Natural air cooling				
Operating temperature range [°C]			0 to 40 (No freezing)				
Operating humidity range [%RH]			90 or less (No condensation)				
Insulation resistance [MΩ]			Between all external terminals and the case: 50 (500 VDC)				
Weight [g]			220 (Screw mounting) 240 (DIN rail mounting)	210 (Screw mounting) 230 (DIN rail mounting)	220 (Screw mounting) 240 (DIN rail mounting)	210 (Screw mounting) 230 (DIN rail mounting)	190 (Screw mounting) 210 (DIN rail mounting)

*1 Please note that versions are subject to change.
*2 Use a shielded communication cable with CAT5 or higher for the PROFINET, EtherNet/IP™, and EtherCAT®.
*3 The files can be downloaded from the SMC website.

■Trademark
EtherNet/IP™ is a trademark of ODVA.
DeviceNet™ is a trademark of ODVA.
EtherCAT® is registered trademark and patented technology, licensed by Beckhoff Automation GmbH, Germany.

Example of Operation Command

In addition to the step data input of 64 points maximum in each communication protocol, the changing of each parameter can be performed in real time via numerical data defined operation.
* Numerical values other than “Moving force,” “Area 1,” and “Area 2” can be used to perform operation under numerical instructions from JXCL1.

<Application example> Movement between 2 points

No.	Movement mode	Speed	Position	Acceleration	Deceleration	Pushing force	Trigger LV	Pushing speed	Moving force	Area 1	Area 2	In position
0	1: Absolute	100	10	3000	3000	0	0	0	100	0	0	0.50
1	1: Absolute	100	100	3000	3000	0	0	0	100	0	0	0.50

<Step no. defined operation>
Sequence 1: Servo ON instruction
Sequence 2: Instruction to return to origin
Sequence 3: Specify step data No. 0 to input the DRIVE signal.
Sequence 4: Specify step data No. 1 after the DRIVE signal has been temporarily turned OFF to input the DRIVE signal.

<Numerical data defined operation>
Sequence 1: Servo ON instruction
Sequence 2: Instruction to return to origin
Sequence 3: Specify step data No. 0 and turn ON the input instruction flag (position). Input 10 in the target position. Subsequently the start flag turns ON.
Sequence 4: Turn ON step data No. 0 and the input instruction flag (position) to change the target position to 100 while the start flag is ON.

The same operation can be performed with any operation command.

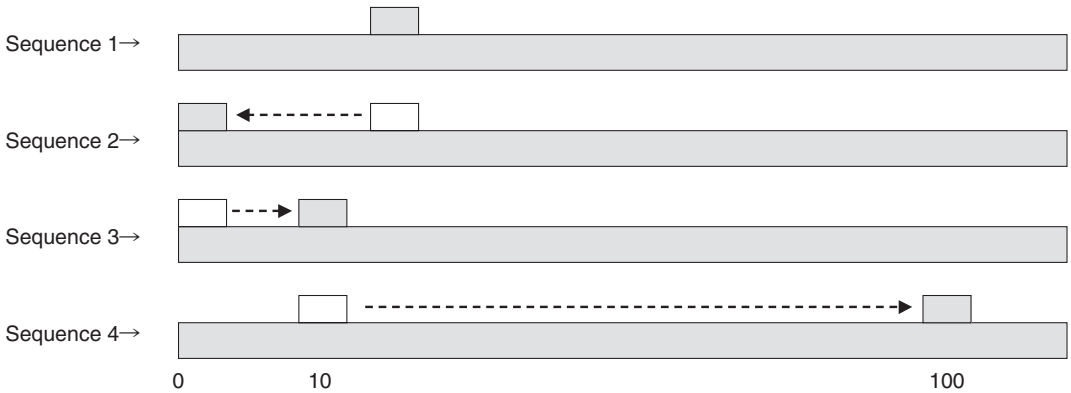

Dimensions

JXCE1/JXC91

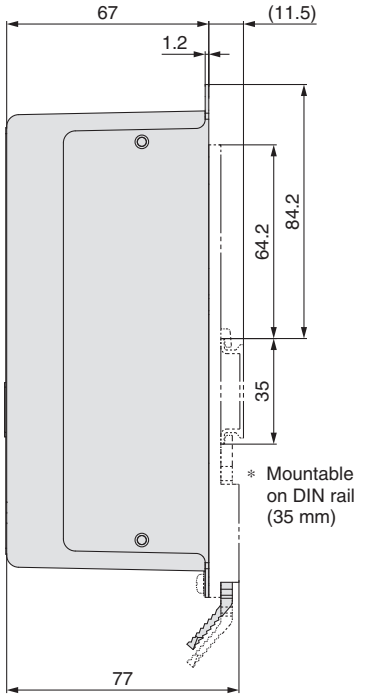

JXCE1

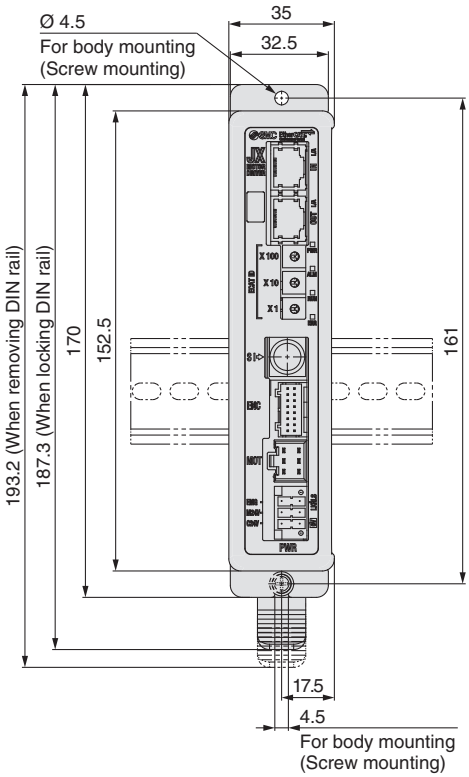

JXC91

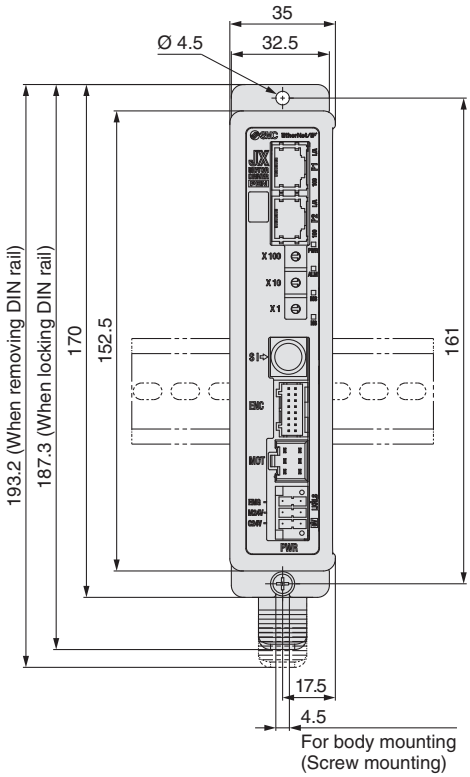

JXCP1/JXCD1

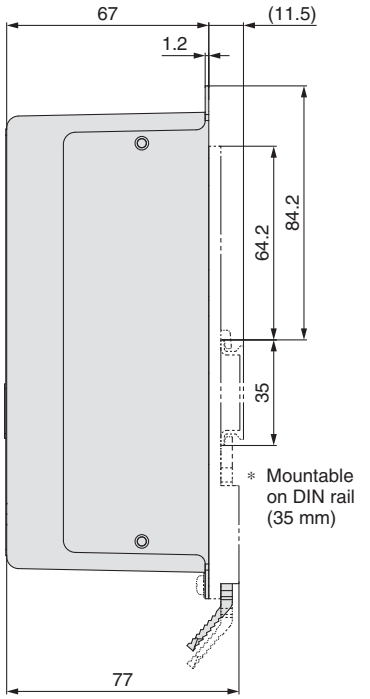

JXCP1

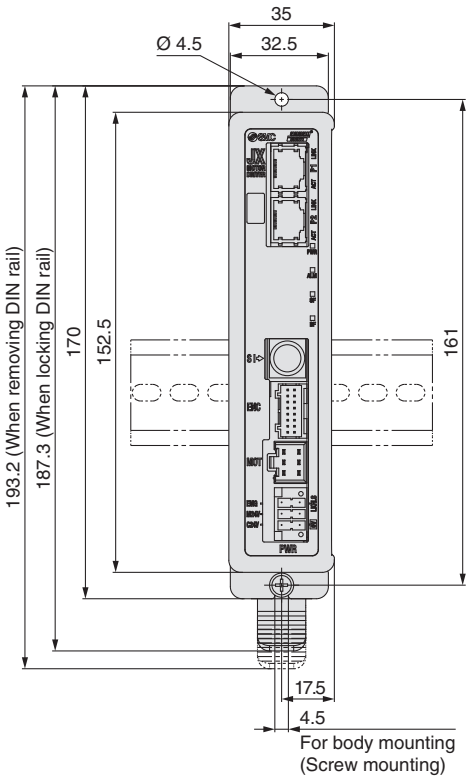

JXCD1

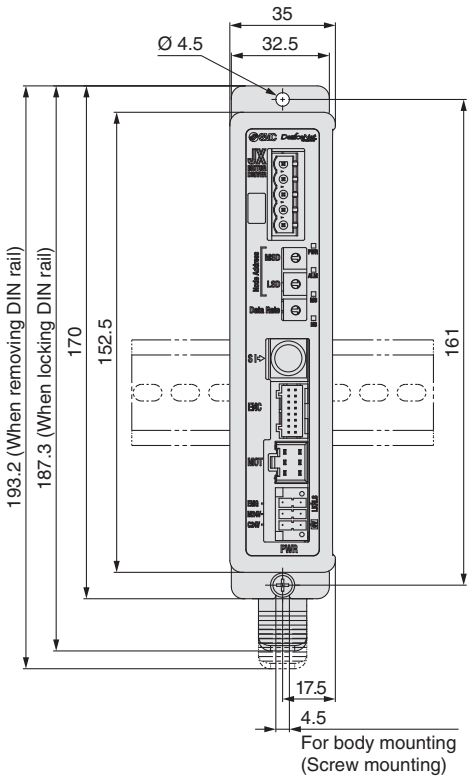

Dimensions

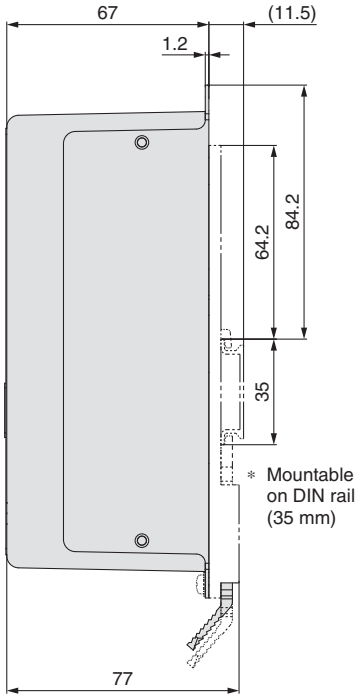

JXCL1

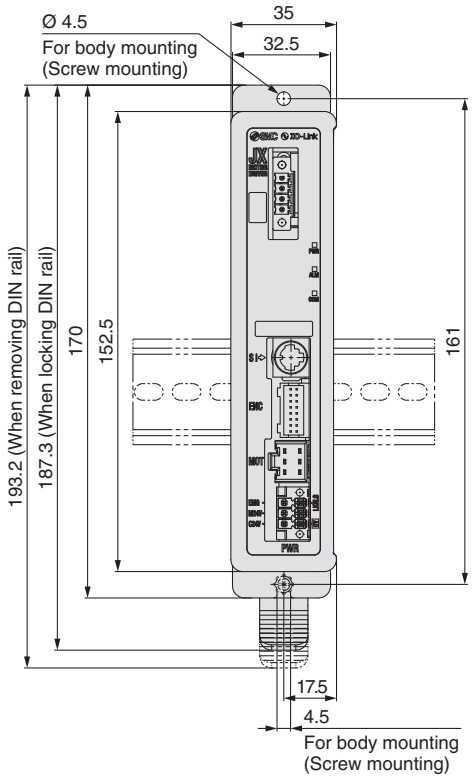

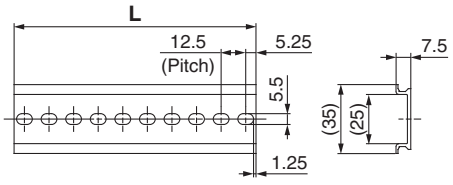

L Dimensions [mm]

No.	1	2	3	4	5	6	7	8	9	10	11	12	13	14	15	16	17	18	19	20
L	23	35.5	48	60.5	73	85.5	98	110.5	123	135.5	148	160.5	173	185.5	198	210.5	223	235.5	248	260.5

No.	21	22	23	24	25	26	27	28	29	30	31	32	33	34	35	36	37	38	39	40
L	273	285.5	298	310.5	323	335.5	348	360.5	373	385.5	398	410.5	423	435.5	448	460.5	473	485.5	498	510.5

Options: Actuator Cable

[Robotic cable, standard cable for step motor (Servo/24 VDC)]

LE – CP – 1 – ☐

Cable length (L) [m]

1	1.5
3	3
5	5
8	8*1
A	10*1
B	15*1
C	20*1

*1 Produced upon receipt of order (Robotic cable only)

Cable type

—	Robotic cable (Flexible cable)
S	Standard cable

LE-CP-$^{1}_{3}$$_{5}$/Cable length: 1.5 m, 3 m, 5 m

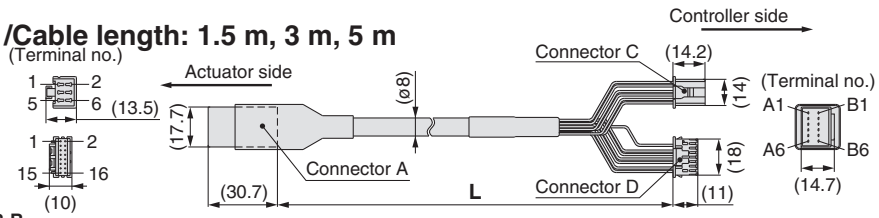

LE-CP-$^{8}_{A}$$^{B}_{C}$/Cable length: 8 m, 10 m, 15 m, 20 m
(*1 Produced upon receipt of order)

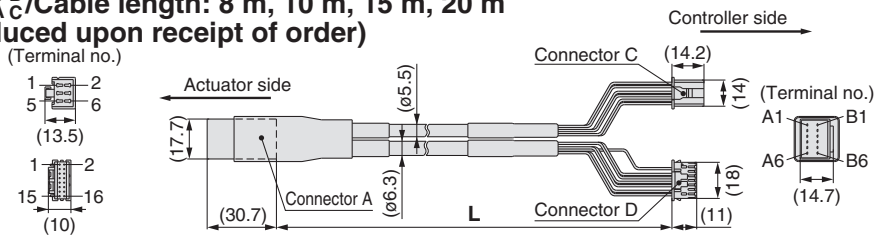

Product no.	Weight [g]	Note
LE-CP-1-S	190	Standard cable
LE-CP-3-S	280	
LE-CP-5-S	460	
LE-CP-1	140	Robotic cable
LE-CP-3	260	
LE-CP-5	420	
LE-CP-8	790	
LE-CP-A	980	
LE-CP-B	1460	
LE-CP-C	1940	

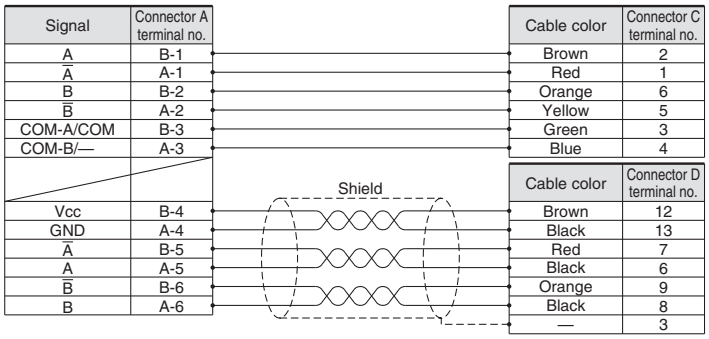

[Robotic cable, standard cable with lock and sensor for step motor (Servo/24 VDC)]

LE – CP – 1 – B – ☐

Cable length (L) [m]

1	1.5
3	3
5	5
8	8*1
A	10*1
B	15*1
C	20*1

*1 Produced upon receipt of order (Robotic cable only)

With lock and sensor

Cable type

—	Robotic cable (Flexible cable)
S	Standard cable

LE-CP-$^{1}_{3}$$_{5}$/Cable length: 1.5 m, 3 m, 5 m

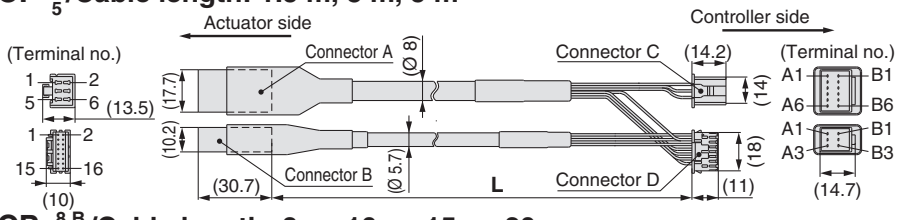

LE-CP-$^{8}_{A}$$^{B}_{C}$/Cable length: 8 m, 10 m, 15 m, 20 m
(*1 Produced upon receipt of order)

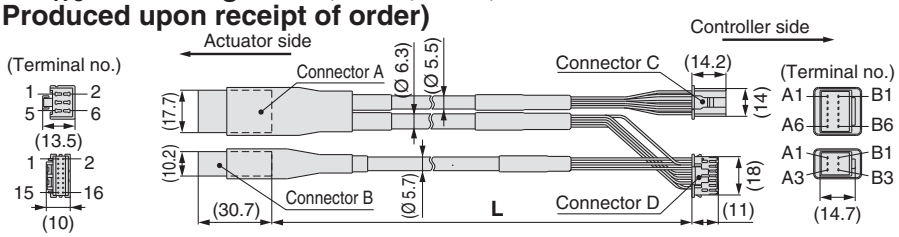

Product no.	Weight [g]	Note
LE-CP-1-B-S	240	Standard cable
LE-CP-3-B-S	380	
LE-CP-5-B-S	630	
LE-CP-1-B	190	Robotic cable
LE-CP-3-B	360	
LE-CP-5-B	590	
LE-CP-8-B	1060	
LE-CP-A-B	1320	
LE-CP-B-B	1920	
LE-CP-C-B	2620	

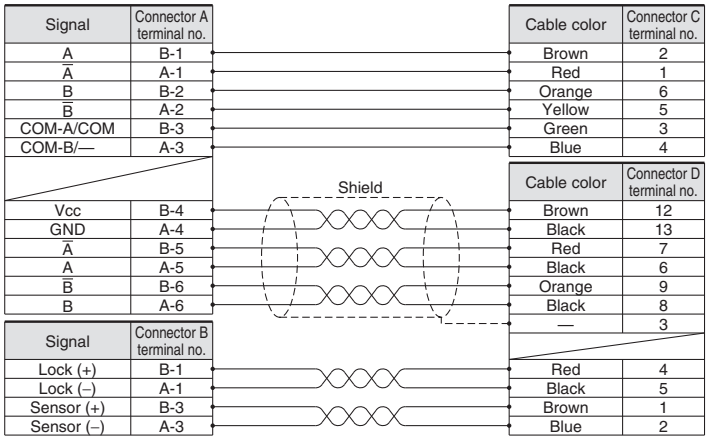

Options

■ Controller setting kit JXC-W2

[Contents]
① Communication cable
② USB cable
③ Controller setting software
∗ A conversion cable (P5062-5) is not required.

JXC − W2 − □

Contents

—	A kit includes: Communication cable, USB cable, Controller setting software
C	Communication cable
U	USB cable
S	Controller setting software (CD-ROM)

① Communication cable JXC-W2-C

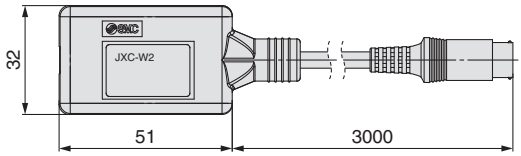

∗ It can be connected to the controller directly.

② USB cable JXC-W2-U

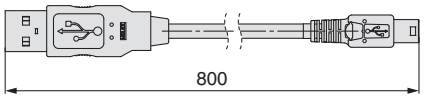

③ Controller setting software (CD-ROM) JXC-W2-S

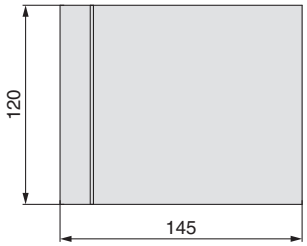

■ DIN rail mounting adapter LEC-3-D0

∗ With 2 mounting screws

This should be used when the DIN rail mounting adapter is mounted onto a screw mounting type controller afterward.

■ DIN rail AXT100-DR-□

∗ For □, enter a number from the No. line in the table on page 227. Refer to the dimension drawings on pages 226 and 227 for the mounting dimensions.

■ Power supply plug JXC-CPW

∗ The power supply plug is an accessory.

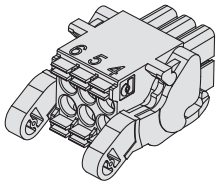

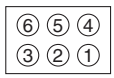

① C24V ④ 0V
② M24V ⑤ N.C.
③ EMG ⑥ LK RLS

Power supply plug

Terminal name	Function	Details
0V	Common supply (–)	M24V terminal/C24V terminal/EMG terminal/ LK RLS terminal are common (–).
M24V	Motor power supply (+)	Motor power supply (+) of the controller
C24V	Control power supply (+)	Control power supply (+) of the controller
EMG	Stop (+)	Connection terminal of the external stop circuit
LK RLS	Lock release (+)	Connection terminal of the lock release switch

■ Communication plug connector

For DeviceNet™

Straight type JXC-CD-S

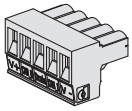

T-branch type JXC-CD-T

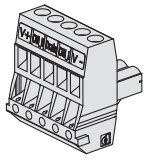

Communication plug connector for DeviceNet™

Terminal name	Details
V+	Power supply (+) for DeviceNet™
CAN_H	Communication wire (High)
Drain	Grounding wire/Shielded wire
CAN_L	Communication wire (Low)
V–	Power supply (–) for DeviceNet™

For IO-Link

Straight type JXC-CL-S

∗ The communication plug connector for IO-Link is an accessory.

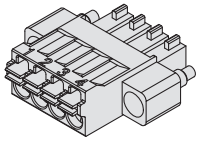

Communication plug connector for IO-Link

Terminal no.	Terminal name	Details
1	L+	+24 V
2	NC	N/A
3	L–	0 V
4	C/Q	IO-Link signal

■ Conversion cable P5062-5 (Cable length: 300 mm)

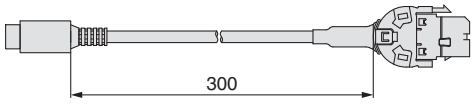

∗ To connect the teaching box (LEC-T1-3□G□) or controller setting kit (LEC-W2) to the controller, a conversion cable is required.

JXCE1/91/P1/D1/L1 Series
Precautions Related to Differences in Controller Versions

As the controller version of the JXC series differs, the internal parameters are not compatible.

■ If using the JXC□1□-BC, please use the latest version of the JXC-BCW (parameter writing tool).

■ There are currently 3 versions available: version 1 products (V1.□ or S1.□), version 2 products (V2.□ or S2.□), and version 3 products (V3.□ or S3.□). Keep in mind that in order to write a backup file (.bkp) to another controller with the JXC-BCW, it needs to be the same version as the controller that created the file. (For example, a backup file created by a version 1 product can only be written to another version 1 product, and so on.)

Identifying Version Symbols

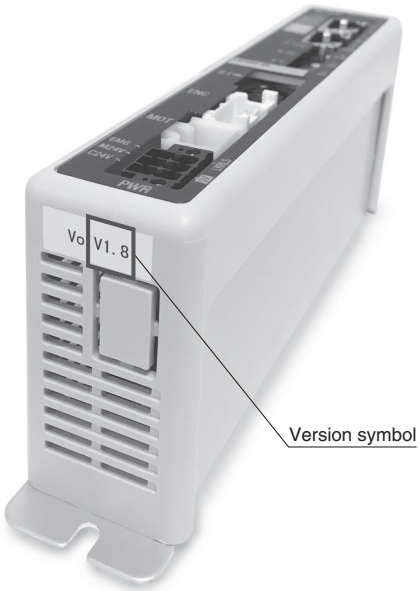

JXC□1 Series Version V3.□ or S3.□ Products

XR V3.0

Applicable models

JXC91□ Series

XR S3.0 T1.0

Applicable models

JXCD1□ Series
JXCE1□ Series
JXCP1□ Series
JXCL1□ Series

JXC□1 Series Version V2.□ or S2.□ Products

WP V2.1

Applicable models

JXC91□ Series

WP S2.2 T1.1

Applicable models

JXCD1□ Series
JXCE1□ Series
JXCP1□ Series
JXCL1□ Series

JXC□1 Series Version V1.□ or S1.□ Products

XR V1.0

Applicable models

JXC91□ Series

XR S1.0 T1.0

Applicable models

JXCD1□ Series
JXCE1□ Series
JXCP1□ Series
JXCL1□ Series

LEC Series
Teaching Box/LEC-T1

How to Order

LEC-T1-3EG□

Teaching box

Cable length [m]

3	3

Initial language

J	Japanese
E	English

∗ The displayed language can be changed to English or Japanese.

Stop switch

G	Equipped with stop switch

Enable switch

—	None
S	Equipped with enable switch

∗ Interlock switch for jog and test function

Standard functions
- **Chinese character display**
- **Stop switch is provided.**

Option
- **Enable switch is provided.**

Specifications

Item	Description
Switch	Stop switch, Enable switch (Option)
Cable length [m]	3
Enclosure	IP64 (Except connector)
Operating temperature range [°C]	5 to 50
Operating humidity range [%RH]	90 or less (No condensation)
Weight [g]	350 (Except cable)

[CE-compliant products]
The EMC compliance of the teaching box was tested with a step motor controller (servo/24 VDC) and an applicable actuator.
[UL-compliant products]
When compliance with UL is required, the electric actuator and controller should be used with a UL1310 Class 2 power supply.

Easy Mode

Function	Details
Step data	• Setting of step data
Jog	• Jog operation • Return to origin
Test	• 1 step operation • Return to origin
Monitor	• Display of axis and step data no. • Display of two items selected from Position, Speed, Force.
ALM	• Active alarm display • Alarm reset
TB setting	• Reconnection of axis (Ver. 1.∗∗) • Displayed language setting (Ver. 2.∗∗) • Setting of easy/normal mode • Setting step data and selection of items from easy mode monitor

Menu Operations Flowchart

Menu
- Data
- Monitor
- Jog
- Test
- ALM
- TB setting

Data
Step data no.
Setting of two items selected below
Ver. 1.∗∗:
Position, Speed, Force, Acceleration, Deceleration
Ver. 2.∗∗:
Position, Speed, Pushing force, Acceleration, Deceleration, Movement MOD, Trigger LV, Pushing speed, Moving force, Area 1, Area 2, In position

Monitor
Display of step no.
Display of two items selected below
(Position, Speed, Force)

Jog
Return to origin
Jog operation

Test
1 step operation

ALM
Active alarm display
Alarm reset

TB setting
Reconnect (Ver. 1.∗∗)
Japanese/English (Ver. 2.∗∗)
Easy/Normal
Set item

Normal Mode

Function	Details
Step data	• Step data setting
Parameter	• Parameters setting
Test	• Jog operation/Constant rate movement • Return to origin • Test drive (Specify a maximum of 5 step data and operate.) • Forced output (Forced signal output, Forced terminal output)
Monitor	• Drive monitor • Output signal monitor • Input signal monitor • Output terminal monitor • Input terminal monitor
ALM	• Active alarm display (Alarm reset) • Alarm log record display
File	• Data saving Save the step data and parameters of the controller which is being used for communication (it is possible to save four files, with one set of step data and parameters defined as one file). • Load to controller Loads the data which is saved in the teaching box to the controller which is being used for communication. • Delete the saved data. • File protection (Ver. 2.**)
TB setting	• Display setting (Easy/Normal mode) • Language setting (Japanese/English) • Backlight setting • LCD contrast setting • Beep sound setting • Max. connection axis • Distance unit (mm/inch)
Reconnect	• Reconnection of axis

Menu Operations Flowchart

- **Menu**: Step data, Parameter, Monitor, Test, ALM, File, TB setting, Reconnect
- **Step data**: Step data no., Movement MOD, Speed, Position, Acceleration, Deceleration, Pushing force, Trigger LV, Pushing speed, Moving force, Area 1, 2, In position
- **Parameter**: Basic, ORIG
  - **Basic setting**
  - **ORIG setting**
- **Monitor**: Drive, Output signal, Input signal, Output terminal, Input terminal
  - **DRV monitor**: Position, Speed, Torque, Step no., Last step no.
  - **Output signal monitor**
  - **Input signal monitor**
  - **Output terminal monitor**
  - **Input terminal monitor**
- **Test**: JOG/MOVE, Return to ORIG, Test drive, Forced output
- **ALM**: Status, ALM Log record
  - **Status**: Active alarm display, Alarm reset
  - **ALM Log record display**: Log entry display
- **File**: Data saving, Load to controller, File deletion, File protection (Ver. 2.**)
- **TB setting**: Easy/Normal, Language, Backlight, LCD contrast, Beep, Max. connection axis, Password, Distance unit
- **Reconnect**

Dimensions

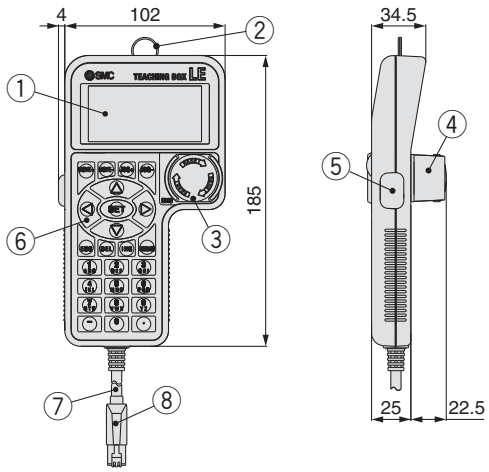

No.	Description	Function
1	**LCD**	A screen of liquid crystal display (with backlight)
2	**Ring**	A ring for hanging the teaching box
3	**Stop switch**	When switch is pushed in, the switch locks and stops. The lock is released when it is turned to the right.
4	**Stop switch guard**	A guard for the stop switch
5	**Enable switch (Option)**	Prevents unintentional operation (unexpected operation) of the jog test function. Other functions such as data change are not covered.
6	**Key switch**	Switch for each input
7	**Cable**	Length: 3 meters
8	**Connector**	A connector connected to CN4 of the controller

3-Axis Step Motor Controller
(EtherNet/IP™ Type)
JXC92 Series

How to Order

■ EtherNet/IP™ Type (JXC92)

Controller

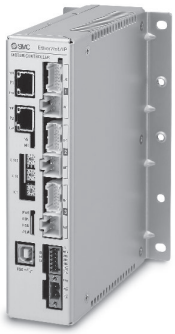

JXC 9 2 7

EtherNet/IP™ type

3-axis type

Mounting

Symbol	Mounting
7	Screw mounting
8	DIN rail

∗ Order the actuator separately, including the actuator cable.
(Example: LEY16B-100-S1)
∗ For the “Speed–Work Load” graph of the actuator, refer to page 38.

Specifications

For the setting of functions and operation methods, refer to the operation manual on the SMC website. (Documents/Download --> Instruction Manuals)

EtherNet/IP™ Type (JXC92)

Item		Specifications
Number of axes		Max. 3 axes
Compatible motor		Step motor (Servo/24 VDC)
Compatible encoder		Incremental A/B phase (Encoder resolution: 800 pulse/rotation)
Power supply∗1		Control power supply Power voltage: 24 VDC ±10 % Max. current consumption: 500 mA Motor power supply Power voltage: 24 VDC ±10 % Max. current consumption: Based on the connected actuator∗2
Communication	**Protocol**	EtherNet/IP™∗3
	Communication speed	10 Mbps/100 Mbps (automatic negotiation)
	Communication method	Full duplex/Half duplex (automatic negotiation)
	Configuration file	EDS file
	Occupied area	Input 16 bytes/Output 16 bytes
	IP address setting range	Manual setting by switches: From 192.168.1.1 to 254, Via DHCP server: Arbitrary address
	Vendor ID	7 h (SMC Corporation)
	Product type	2 Bh (Generic Device)
	Product code	DEh
Serial communication		USB2.0 (Full Speed 12 Mbps)
Memory		Flash-ROM
LED indicator		PWR, RUN, USB, ALM, NS, MS, L/A, 100
Lock control		Forced-lock release terminal∗4
Cable length		Actuator cable: 20 m or less
Cooling system		Natural air cooling
Operating temperature range		0 °C to 40 °C (No freezing)
Operating humidity range		90 % RH or less (No condensation)
Storage temperature range		–10 °C to 60 °C (No freezing)
Storage humidity range		90 % RH or less (No condensation)
Insulation resistance		Between all external terminals and the case: 50 MΩ (500 VDC)
Weight		600 g (Screw mounting), 650 g (DIN rail mounting)

∗1 Do not use a power supply with inrush current protection for the motor drive power supply.
∗2 Power consumption depends on the actuator connected. Refer to the actuator specifications for further details.
∗3 EtherNet/IP™ is a trademark of ODVA.
∗4 Applicable to non-magnetising locks

Dimensions

EtherNet/IP™ Type JXC92

Screw mounting

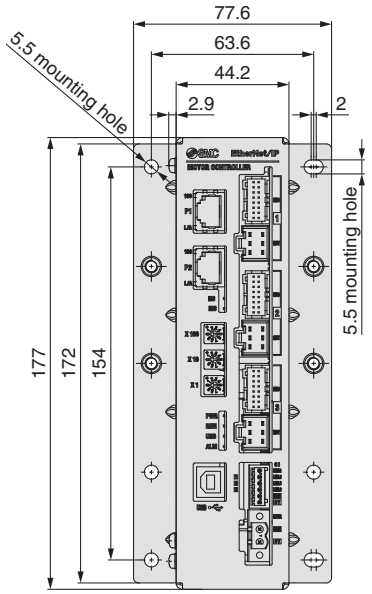

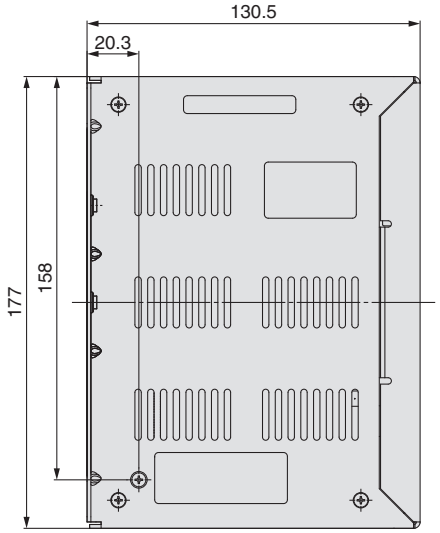

DIN rail mounting

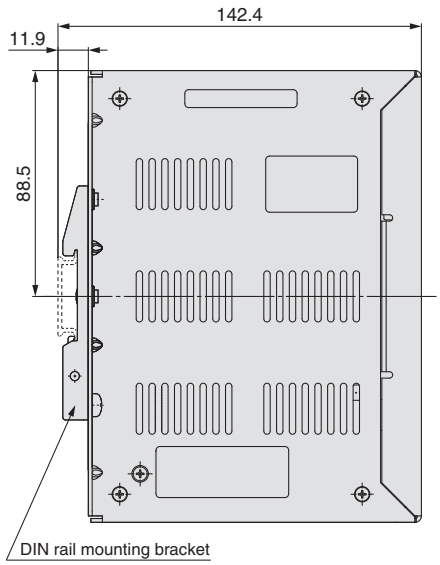

Controller Details

EtherNet/IP™ Type JXC92

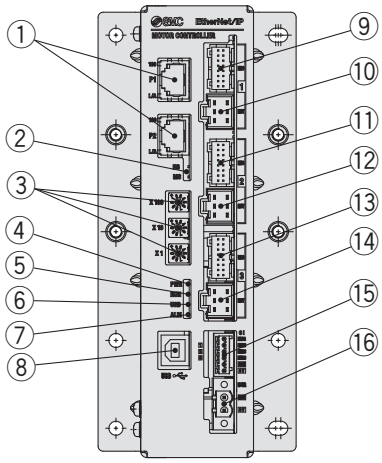

No.	Name	Description	Details
①	**P1, P2**	EtherNet/IP™ communication connector	Connect Ethernet cable.
②	**NS, MS**	Communication status LED	Displays the status of the EtherNet/IP™ communication
③	**X100** **X10** **X1**	IP address setting switches	Switch to set the 4th byte of the IP address by X1, X10 and X100.
④	**PWR**	Power supply LED (Green)	Power supply ON: Green turns on Power supply OFF: Green turns off
⑤	**RUN**	Operation LED (Green)	Running in EtherNet/IP™: Green turns on Running via USB communication: Green flashes Stopped: Green turns off
⑥	**USB**	USB connection LED (Green)	USB connected: Green turns on USB not connected: Green turns off
⑦	**ALM**	Alarm LED (Red)	With alarm: Red turns on Without alarm: Red turns off
⑧	**USB**	Serial communication connector	Connect to a PC via the USB cable.
⑨	**ENC** 1	Encoder connector (16 pins)	Axis 1: Connect the actuator cable.
⑩	**MOT** 1	Motor power connector (6 pins)	
⑪	**ENC** 2	Encoder connector (16 pins)	Axis 2: Connect the actuator cable.
⑫	**MOT** 2	Motor power connector (6 pins)	
⑬	**ENC** 3	Encoder connector (16 pins)	Axis 3: Connect the actuator cable.
⑭	**MOT** 3	Motor power connector (6 pins)	
⑮	**CI**	Control power supply connector∗1	Control power supply (+), All axes stop (+), Axis 1 lock release (+), Axis 2 lock release (+), Axis 3 lock release (+), Common (–)
⑯	**M PWR**	Motor power supply connector∗1	Motor power supply (+), Motor power supply (–)

∗1 Connectors are included. (Refer to page 239.)

4-Axis Step Motor Controller
(Parallel I/O/EtherNet/IP™ Type)
JXC73/83/93 Series

CE RoHS

How to Order

■ **Parallel I/O (JXC73/83)**

Controller

JXC 8 3 2

I/O type

Symbol	I/O type
7	NPN
8	PNP

4-axis type

I/O cable, mounting

Symbol	I/O cable	Mounting
1	1.5 m	Screw mounting
2	1.5 m	DIN rail
3	3 m	Screw mounting
4	3 m	DIN rail
5	5 m	Screw mounting
6	5 m	DIN rail
7	None	Screw mounting
8	None	DIN rail

∗ Two I/O cables are included.

■ **EtherNet/IP™ Type (JXC93)**

Controller

JXC 9 3 7

EtherNet/IP™ type

4-axis type

Mounting

Symbol	Mounting
7	Screw mounting
8	DIN rail

∗ Order the actuator separately, including the actuator cable.
(Example: LEY16B-100-S1)
∗ For the “Speed–Work Load” graph of the actuator, refer to page 38.

Specifications

For the setting of functions and operation methods, refer to the operation manual on the SMC website. (Documents/Download --> Instruction Manuals)

Parallel I/O (JXC73/83)

Item	Specifications
Number of axes	Max. 4 axes
Compatible motor	Step motor (Servo/24 VDC)
Compatible encoder	Incremental A/B phase (Encoder resolution: 800 pulse/rotation)
Power supply∗1	Main control power supply Power voltage: 24 VDC ±10 % Max. current consumption: 300 mA Motor power supply, Motor control power supply (Common) Power voltage: 24 VDC ±10 % Max. current consumption: Based on the connected actuator∗2
Parallel input	16 inputs (Photo-coupler isolation)
Parallel output	32 outputs (Photo-coupler isolation)
Serial communication	USB2.0 (Full Speed 12 Mbps)
Memory	Flash-ROM/EEPROM
LED indicator	PWR, RUN, USB, ALM
Lock control	Forced-lock release terminal∗3
Cable length	I/O cable: 5 m or less, Actuator cable: 20 m or less
Cooling system	Natural air cooling
Operating temperature range	0 °C to 40 °C (No freezing)
Operating humidity range	90 % RH or less (No condensation)
Storage temperature range	–10 °C to 60 °C (No freezing)
Storage humidity range	90 % RH or less (No condensation)
Insulation resistance	Between all external terminals and the case: 50 MΩ (500 VDC)
Weight	1050 g (Screw mounting), 1100 g (DIN rail mounting)

∗1 Do not use a power supply with inrush current protection for the motor drive power and motor control power supply.
∗2 Power consumption depends on the actuator connected. Refer to the actuator specifications for further details.
∗3 Applicable to non-magnetising locks

For the setting of functions and operation methods, refer to the operation manual on the SMC website. (Documents/Download --> Instruction Manuals)

EtherNet/IP™ Type (JXC93)

Item		Specifications
Number of axes		Max. 4 axes
Compatible motor		Step motor (Servo/24 VDC)
Compatible encoder		Incremental A/B phase (Encoder resolution: 800 pulse/rotation)
Power supply∗1		Main control power supply Power voltage: 24 VDC ±10 % Max. current consumption: 350 mA Motor power supply, Motor control power supply (Common) Power voltage: 24 VDC ±10 % Max. current consumption: Based on the connected actuator∗2
Communication	**Protocol**	EtherNet/IP™∗4
	Communication speed	10 Mbps/100 Mbps (automatic negotiation)
	Communication method	Full duplex/Half duplex (automatic negotiation)
	Configuration file	EDS file
	Occupied area	Input 16 bytes/Output 16 bytes
	IP address setting range	Manual setting by switches: From 192.168.1.1 to 254, Via DHCP server: Arbitrary address
	Vendor ID	7 h (SMC Corporation)
	Product type	2 Bh (Generic Device)
	Product code	DCh
Serial communication		USB2.0 (Full Speed 12 Mbps)
Memory		Flash-ROM/EEPROM
LED indicator		PWR, RUN, USB, ALM, NS, MS, L/A, 100
Lock control		Forced-lock release terminal∗3
Cable length		Actuator cable: 20 m or less
Cooling system		Natural air cooling
Operating temperature range		0 °C to 40 °C (No freezing)
Operating humidity range		90 % RH or less (No condensation)
Storage temperature range		–10 °C to 60 °C (No freezing)
Storage humidity range		90 % RH or less (No condensation)
Insulation resistance		Between all external terminals and the case: 50 MΩ (500 VDC)
Weight		1050 g (Screw mounting), 1100 g (DIN rail mounting)

∗1 Do not use a power supply with inrush current protection for the motor drive power and motor control power supply.
∗2 Power consumption depends on the actuator connected. Refer to the actuator specifications for further details.
∗3 Applicable to non-magnetising locks
∗4 EtherNet/IP™ is a trademark of ODVA.

Dimensions

Parallel I/O JXC73/83

Screw mounting

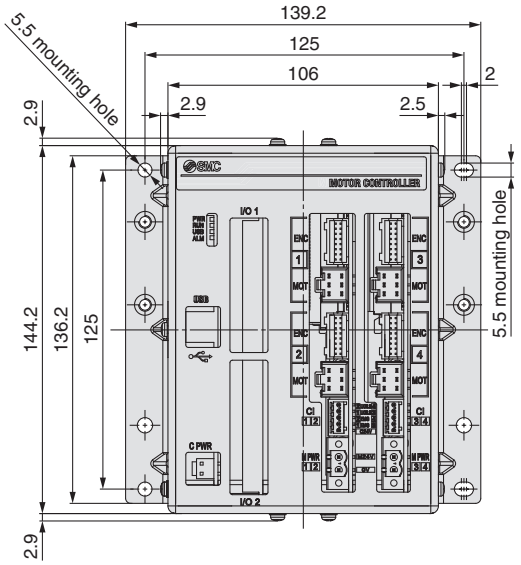

DIN rail mounting

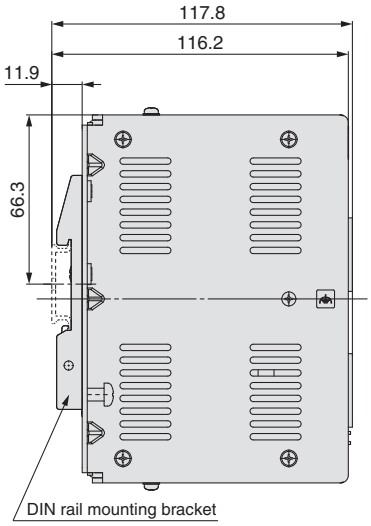

EtherNet/IP™ Type JXC93

Screw mounting

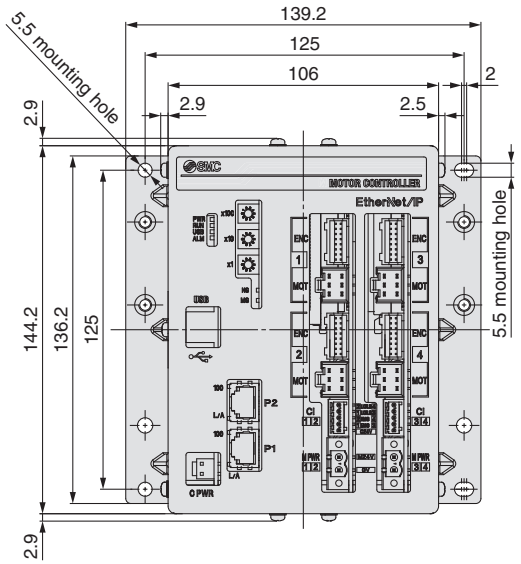

DIN rail mounting

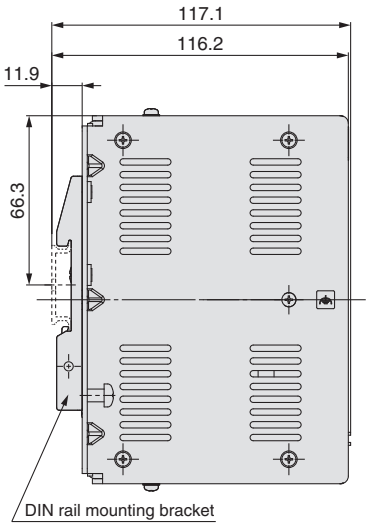

Controller Details

Parallel I/O JXC73/83

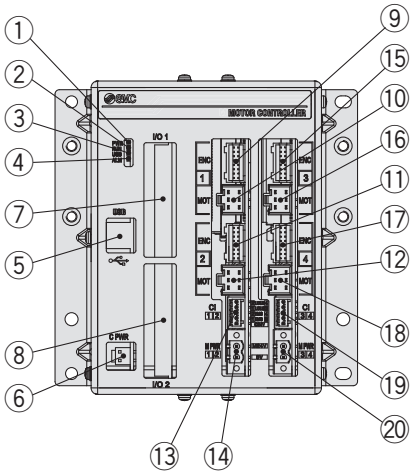

No.	Name	Description	Details
①	**PWR**	Power supply LED (Green)	Power supply ON: Green turns on Power supply OFF: Green turns off
②	**RUN**	Operation LED (Green)	Running in parallel I/O: Green turns on Running via USB communication: Green flashes Stopped: Green turns off
③	**USB**	USB connection LED (Green)	USB connected: Green turns on USB not connected: Green turns off
④	**ALM**	Alarm LED (Red)	With alarm: Red turns on Without alarm: Red turns off
⑤	**USB**	Serial communication	Connect to a PC via the USB cable.
⑥	**C PWR**	Main control power supply connector (2 pins)*1	Main control power supply (+) (–)
⑦	**I/O 1**	Parallel I/O connector (40 pins)	Connect to a PLC via the I/O cable.
⑧	**I/O 2**	Parallel I/O connector (40 pins)	Connect to a PLC via the I/O cable.
⑨	**ENC** 1	Encoder connector (16 pins)	Axis 1: Connect the actuator cable.
⑩	**MOT** 1	Motor power connector (6 pins)	
⑪	**ENC** 2	Encoder connector (16 pins)	Axis 2: Connect the actuator cable.
⑫	**MOT** 2	Motor power connector (6 pins)	
⑬	**CI** 1 2	Motor control power supply connector*1	Motor control power supply (+), Axis 1 stop (+), Axis 1 lock release (+), Axis 2 stop (+), Axis 2 lock release (+)
⑭	**M PWR** 1 2	Motor power supply connector*1	For Axis 1, 2. Motor power supply (+), Common (–)
⑮	**ENC** 3	Encoder connector (16 pins)	Axis 3: Connect the actuator cable.
⑯	**MOT** 3	Motor power connector (6 pins)	
⑰	**ENC** 4	Encoder connector (16 pins)	Axis 4: Connect the actuator cable.
⑱	**MOT** 4	Motor power connector (6 pins)	
⑲	**CI** 3 4	Motor control power supply connector*1	Motor control power supply (+), Axis 3 stop (+), Axis 3 lock release (+), Axis 4 stop (+), Axis 4 lock release (+)
⑳	**M PWR** 3 4	Motor power supply connector*1	For Axis 3, 4. Motor power supply (+), Common (–)

*1 Connectors are included. (Refer to page 239.)

EtherNet/IP™ Type JXC93

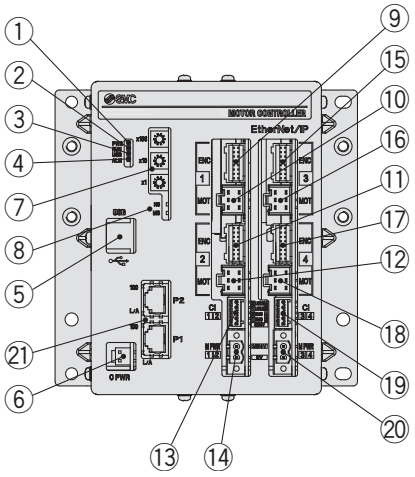

No.	Name	Description	Details
①	**PWR**	Power supply LED (Green)	Power supply ON: Green turns on Power supply OFF: Green turns off
②	**RUN**	Operation LED (Green)	Running in EtherNet/IP™: Green turns on Running via USB communication: Green flashes Stopped: Green turns off
③	**USB**	USB connection LED (Green)	USB connected: Green turns on USB not connected: Green turns off
④	**ALM**	Alarm LED (Red)	With alarm: Red turns on Without alarm: Red turns off
⑤	**USB**	Serial communication	Connect to a PC via the USB cable.
⑥	**C PWR**	Main control power supply connector (2 pins)*1	Main control power supply (+) (–)
⑦	**x100** **x10** **x1**	IP address setting switches	Switch to set the 4th byte of the IP address by X1, X10 and X100.
⑧	**MS, NS**	Communication status LED	Displays the status of the EtherNet/IP™ communication
⑨	**ENC** 1	Encoder connector (16 pins)	Axis 1: Connect the actuator cable.
⑩	**MOT** 1	Motor power connector (6 pins)	
⑪	**ENC** 2	Encoder connector (16 pins)	Axis 2: Connect the actuator cable.
⑫	**MOT** 2	Motor power connector (6 pins)	
⑬	**CI** 1 2	Motor control power supply connector*1	Motor control power supply (+), Axis 1 stop (+), Axis 1 lock release (+), Axis 2 stop (+), Axis 2 lock release (+)
⑭	**M PWR** 1 2	Motor power supply connector*1	For Axis 1, 2. Motor power supply (+), Common (–)
⑮	**ENC** 3	Encoder connector (16 pins)	Axis 3: Connect the actuator cable.
⑯	**MOT** 3	Motor power connector (6 pins)	
⑰	**ENC** 4	Encoder connector (16 pins)	Axis 4: Connect the actuator cable.
⑱	**MOT** 4	Motor power connector (6 pins)	
⑲	**CI** 3 4	Motor control power supply connector*1	Motor control power supply (+), Axis 3 stop (+), Axis 3 lock release (+), Axis 4 stop (+), Axis 4 lock release (+)
⑳	**M PWR** 3 4	Motor power supply connector*1	For Axis 3, 4. Motor power supply (+), Common (–)
㉑	**P1, P2**	EtherNet/IP™ communication connector	Connect Ethernet cable.

*1 Connectors are included. (Refer to page 239.)

Wiring Example 1

Cable with Main Control Power Supply Connector (For 4 Axes)*1: C PWR 1 pc.

For 4 Axes: JXC73/83/93

Terminal name	Function	Details
+24V	Main control power supply (+)	Power supply (+) supplied to the main control
24–0V	Main control power supply (–)	Power supply (–) supplied to the main control

*1 Part no.: JXC-C1 (Cable length: 1.5 m)

Cable with main control power supply connector

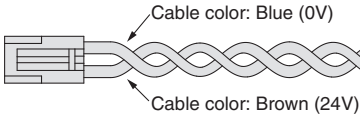

Motor Power Supply Connector (For 3/4 Axes)*2: M PWR 2 pcs.*3

For 3 Axes: JXC92 / For 4 Axes: JXC73/83/93

Terminal name	Function	Details	Note
0V	Motor power supply (–)	Power supply (–) supplied to the motor power	For 3 axes JXC92
		The M 24V terminal, C 24V terminal, EMG terminal, and LKRLS terminal are common (–).	For 4 axes JXC73/83/93
M 24V	Motor power supply (+)	Power supply (+) supplied to the motor power	

*2 Manufactured by PHOENIX CONTACT (Part no.: MSTB2, 5/2-STF-5, 08)
*3 1 pc. for 3 axes (JXC92)

Motor power supply connector

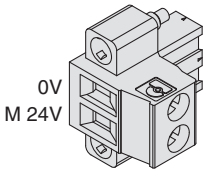

Motor Control Power Supply Connector (For 4 Axes)*4: CI 2 pcs.

For 4 Axes: JXC73/83/93

Terminal name	Function	Details
C 24V	Motor control power supply (+)	Power supply (+) supplied to the motor control
EMG1/EMG3	Stop (+)	Axis 1/Axis 3: Input (+) for releasing the stop
EMG2/EMG4	Stop (+)	Axis 2/Axis 4: Input (+) for releasing the stop
LKRLS1/LKRLS3	Lock release (+)	Axis 1/Axis 3: Input (+) for releasing the lock
LKRLS2/LKRLS4	Lock release (+)	Axis 2/Axis 4: Input (+) for releasing the lock

*4 Manufactured by PHOENIX CONTACT (Part no.: FK-MC0, 5/5-ST-2, 5)

Motor control power supply connector

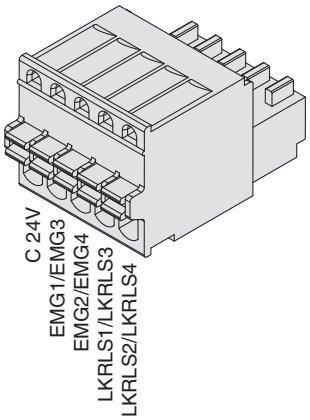

Control Power Supply Connector (For 3 Axes)*5: CI 1 pc.

For 3 Axes: JXC92

Terminal name	Function	Details
0V	Control power supply (–)	The C 24V terminal, LKRLS terminal, and EMG terminal are common (–).
C 24V	Control power supply (+)	Power supply (+) supplied to the control
LKRLS3	Lock release (+)	Axis 3: Input (+) for releasing the lock
LKRLS2	Lock release (+)	Axis 2: Input (+) for releasing the lock
LKRLS1	Lock release (+)	Axis 1: Input (+) for releasing the lock
EMG	Stop (+)	All axes: Input (+) for releasing the stop

*5 Manufactured by PHOENIX CONTACT (Part no.: FK-MC0, 5/6-ST-2, 5)

Control power supply connector

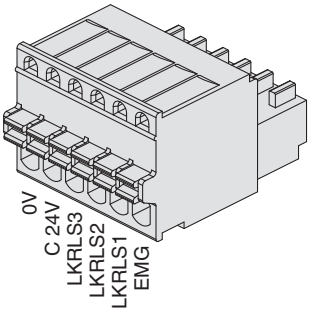

Wiring Example 2

Parallel I/O Connector

* When you connect a PLC to the I/O 1 or I/O 2 parallel I/O connector, use the I/O cable (JXC-C2-□).
* The wiring changes depending on the type of parallel I/O (NPN or PNP).

I/O 1 Wiring example

NPN JXC73

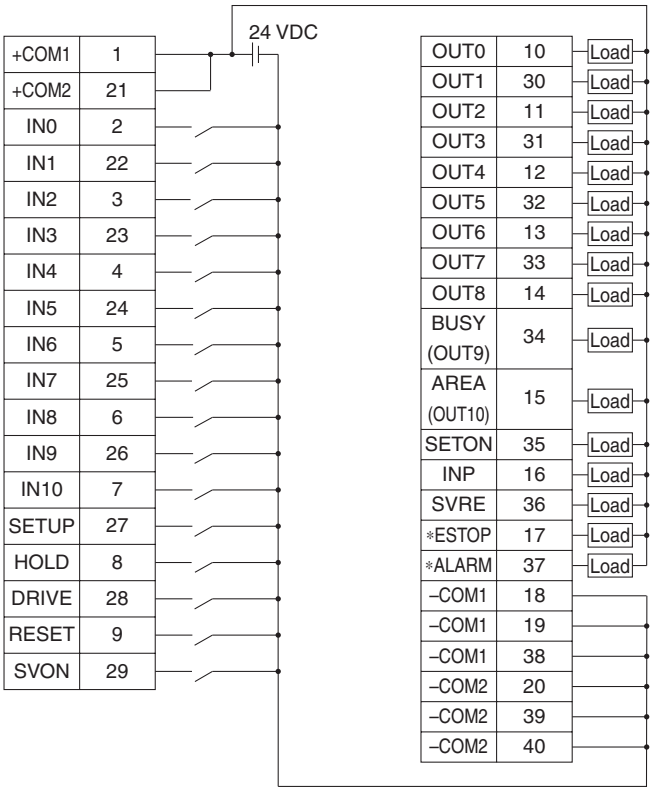

PNP JXC83

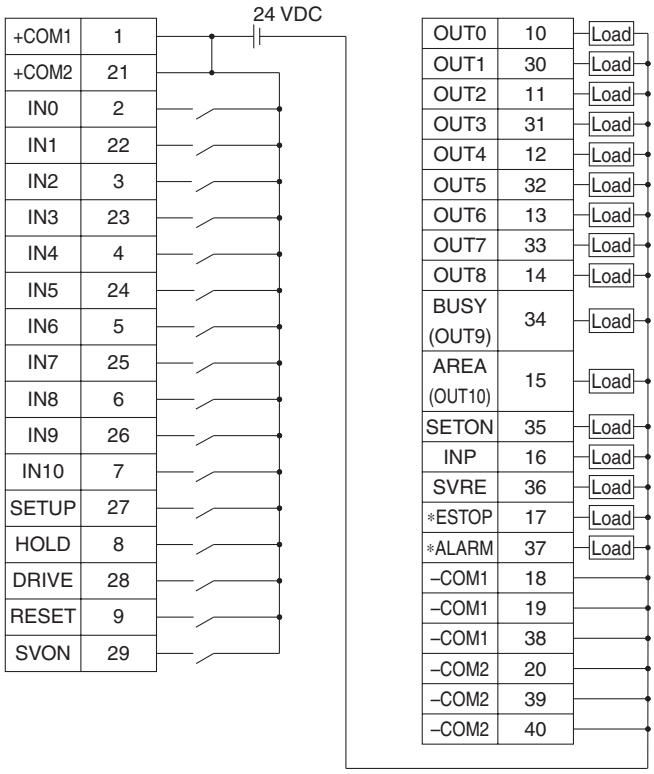

I/O 1 Input Signal

Name	Details
+COM1 +COM2	Connects the power supply 24 V for input/output signal
IN0 to IN8	Step data specified bit no. (Standard: When 512 points are used)
IN9 IN10	Step data specified extension bit no. (Extension: When 2048 points are used)
SETUP	Instruction to return to origin
HOLD	Temporarily stops operation
DRIVE	Instruction to drive
RESET	Resets alarm and interrupts operation
SVON	Servo ON instruction

I/O 1 Output Signal

Name	Details
OUT0 to OUT8	Outputs the step data no. during operation
BUSY (OUT9)	Outputs when the operation of the actuator is in progress
AREA (OUT10)	Outputs when all actuators are within the area output range
SETON	Outputs when the return to origin of all actuators is completed
INP	Outputs when the positioning or pushing of all actuators is completed
SVRE	Outputs when servo is ON
∗ESTOP∗1	OFF when EMG stop is instructed
∗ALARM∗1	OFF when alarm is generated
–COM1 –COM2	Connects the power supply 0 V for input/output signal

∗1 Negative-logic circuit signal

Wiring Example 2

Parallel I/O Connector

* When you connect a PLC to the I/O 1 or I/O 2 parallel I/O connector, use the I/O cable (JXC-C2-□).
* The wiring changes depending on the type of parallel I/O (NPN or PNP).

I/O 2 Wiring example

NPN JXC73

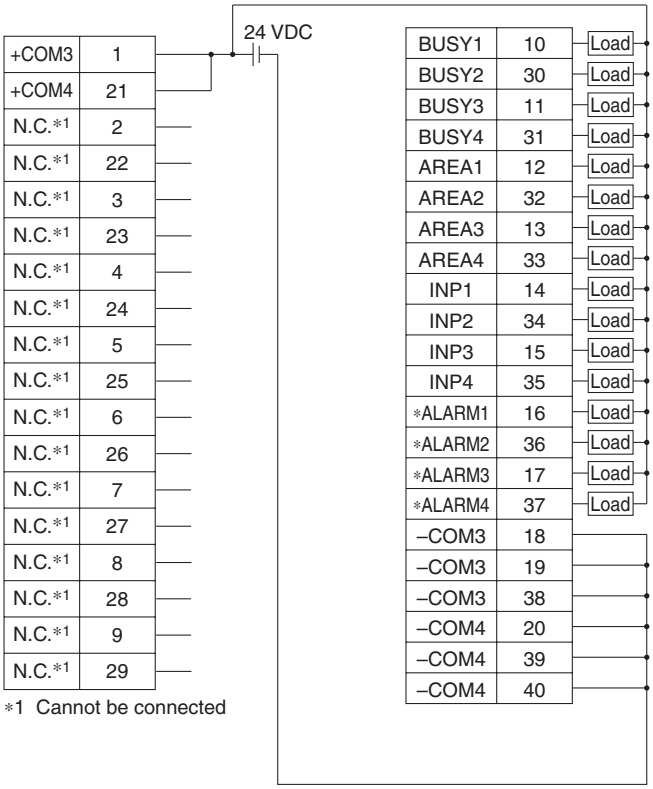

*1 Cannot be connected

PNP JXC83

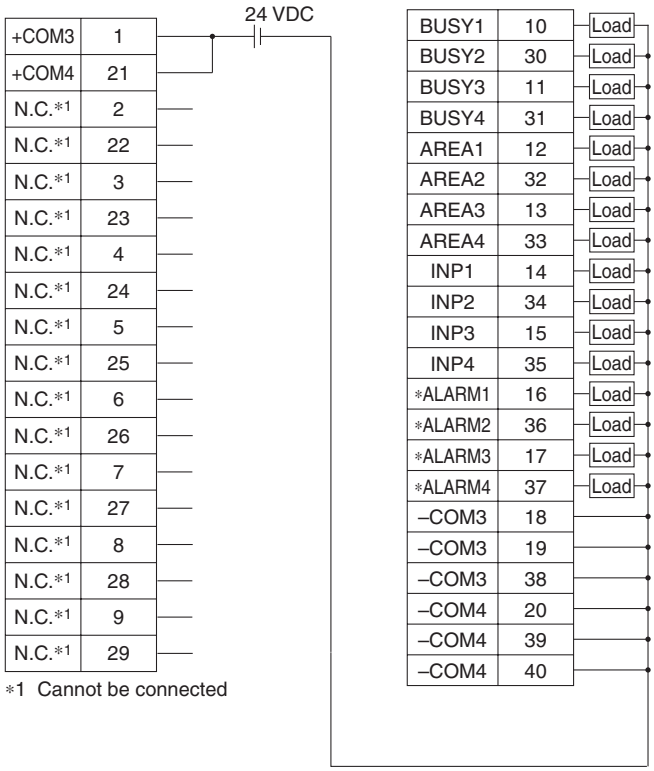

*1 Cannot be connected

I/O 2 Input Signal

Name	Details
+COM3 +COM4	Connects the power supply 24 V for input/output signal
N.C.	Cannot be connected

I/O 2 Output Signal

Name	Details
BUSY1	Busy signal for axis 1
BUSY2	Busy signal for axis 2
BUSY3	Busy signal for axis 3
BUSY4	Busy signal for axis 4
AREA1	Area signal for axis 1
AREA2	Area signal for axis 2
AREA3	Area signal for axis 3
AREA4	Area signal for axis 4
INP1	Positioning or pushing completion signal for axis 1
INP2	Positioning or pushing completion signal for axis 2
INP3	Positioning or pushing completion signal for axis 3
INP4	Positioning or pushing completion signal for axis 4
*ALARM1*2	Alarm signal for axis 1
*ALARM2*2	Alarm signal for axis 2
*ALARM3*2	Alarm signal for axis 3
*ALARM4*2	Alarm signal for axis 4
–COM3 –COM4	Connects the power supply 0 V for input/output signal

*2 Negative-logic circuit signal

Options

Cable with main control power supply connector

For 4 Axes
JXC73/83/93

JXC − C1

Cable length: 1.5 m (Accessory)

Number of cores	2
AWG size	AWG20

I/O cable (1 pc.)

For 4 Axes
JXC73/83

JXC − C2 − □

Cable length (L) [m]

1	1.5
3	3
5	5

Number of cores	40
AWG size	AWG28

Weight

Product no.	Weight [g]
JXC-C2-1	160
JXC-C2-3	300
JXC-C2-5	480

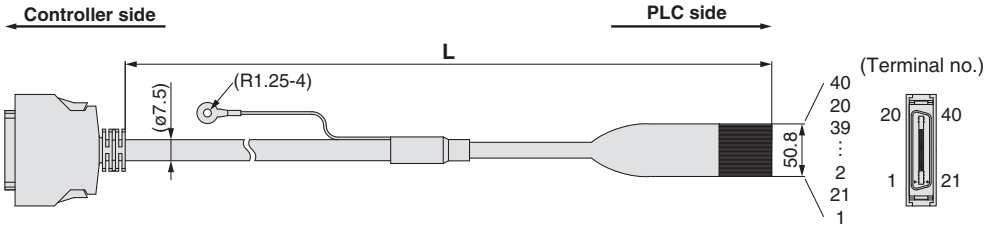

Pin no.	Wire colour	Pin no.	Wire colour	Pin no.	Wire colour	Pin no.	Wire colour
1	Orange (Black 1)	6	Orange (Black 2)	11	Orange (Black 3)	16	Orange (Black 4)
21	Orange (Red 1)	26	Orange (Red 2)	31	Orange (Red 3)	36	Orange (Red 4)
2	Gray (Black 1)	7	Gray (Black 2)	12	Gray (Black 3)	17	Gray (Black 4)
22	Gray (Red 1)	27	Gray (Red 2)	32	Gray (Red 3)	37	Gray (Red 4)
3	White (Black 1)	8	White (Black 2)	13	White (Black 3)	18	White (Black 4)
23	White (Red 1)	28	White (Red 2)	33	White (Red 3)	38	White (Red 4)
4	Yellow (Black 1)	9	Yellow (Black 2)	14	Yellow (Black 3)	19	Yellow (Black 4)
24	Yellow (Red 1)	29	Yellow (Red 2)	34	Yellow (Red 3)	39	Yellow (Red 4)
5	Pink (Black 1)	10	Pink (Black 2)	15	Pink (Black 3)	20	Pink (Black 4)
25	Pink (Red 1)	30	Pink (Red 2)	35	Pink (Red 3)	40	Pink (Red 4)

DIN rail

For 3 Axes | For 4 Axes
JXC92 | JXC73/83/93

AXT100 − DR − □

∗ For □, enter a number from the No. line in the table below. Refer to the dimension drawings on pages 234 and 237 for the mounting dimensions.

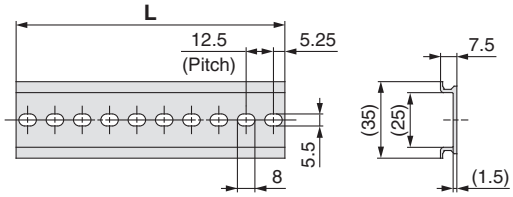

L Dimensions

No.	1	2	3	4	5	6	7	8	9	10	11	12	13	14	15	16	17	18	19	20
L	23	35.5	48	60.5	73	85.5	98	110.5	123	135.5	148	160.5	173	185.5	198	210.5	223	235.5	248	260.5

No.	21	22	23	24	25	26	27	28	29	30	31	32	33	34	35	36	37	38	39	40
L	273	285.5	298	310.5	323	335.5	348	360.5	373	385.5	398	410.5	423	435.5	448	460.5	473	485.5	498	510.5

DIN rail mounting bracket (with 6 mounting screws)

For 3 Axes | For 4 Axes
JXC92 | JXC73/83/93

JXC − Z1

This should be used when the DIN rail mounting bracket is mounted onto a screw mounting type controller afterward.

Options

Controller setting kit

For 4 Axes
JXC73/83/93

JXC – W1

Controller setting kit
(Japanese and English are available.)

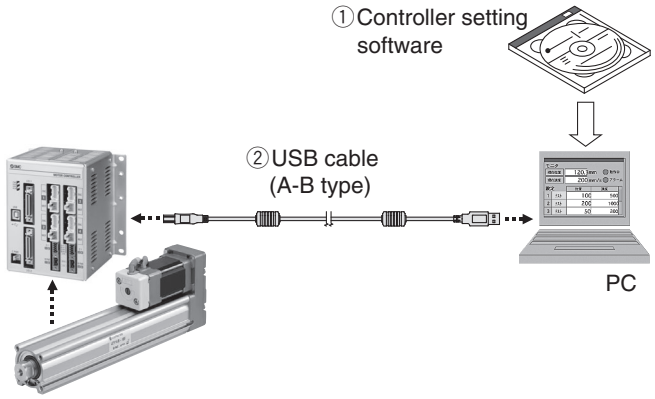

Contents

①Controller setting software (CD-ROM)
②USB cable (Cable length: 3 m)

Description		Model
①	Controller setting software	JXC-W1-1
②	USB cable	JXC-W1-2 (The same cable as the JXC-MA1-2)

∗ Can be ordered separately

Hardware Requirements

PC/AT compatible machine with Windows 7 or Windows 8.1 and USB1.1 or USB2.0 port

∗ Windows® is a registered trademark of Microsoft Corporation in the United States.

Controller setting kit

For 3 Axes
JXC92

JXC – MA1∗1

Controller setting kit
(Japanese and English are available.)

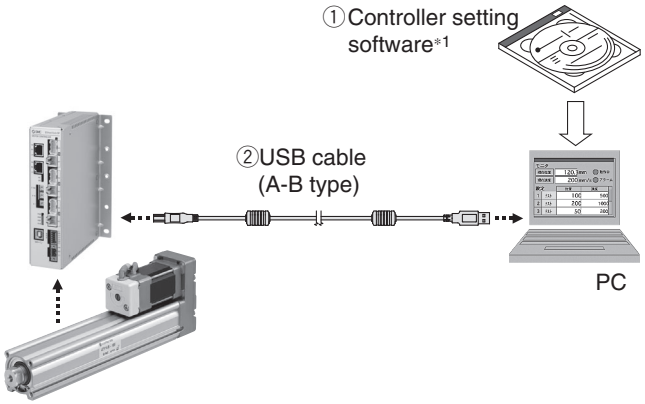

Contents

①Controller setting software (CD-ROM)∗1
②USB cable (Cable length: 3 m)

Description		Model
①	Controller setting software	JXC-MA1-1
②	USB cable	JXC-MA1-2 (The same cable as the JXC-W1-2)

∗ Can be ordered separately

Hardware Requirements

PC/AT compatible machine with Windows 7 or Windows 8.1 and USB1.1 or USB2.0 port

∗1 The controller setting software also includes software dedicated for 4 axes.
∗ Windows® is a registered trademark of Microsoft Corporation in the United States.

Options: Actuator Cable

[Robotic cable, standard cable for step motor (Servo/24 VDC)]

For 3 Axes	For 4 Axes
JXC92	JXC73/83/93

LE − CP − 1 − □

Cable length (L) [m]

1	1.5
3	3
5	5
8	8*1
A	10*1
B	15*1
C	20*1

*1 Produced upon receipt of order (Robotic cable only)

Cable type

—	Robotic cable (Flexible cable)
S	Standard cable

LE-CP-1 3 5/Cable length: 1.5 m, 3 m, 5 m

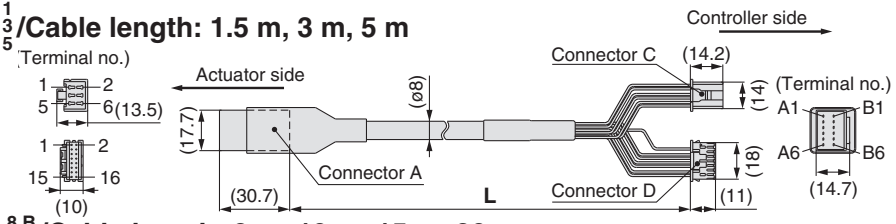

LE-CP-8 A B C/Cable length: 8 m, 10 m, 15 m, 20 m

(*1 Produced upon receipt of order)

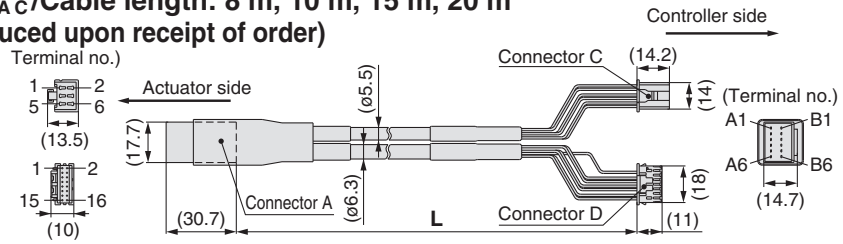

Weight

Product no.	Weight [g]	Note
LE-CP-1-S	190	Standard cable
LE-CP-3-S	280	
LE-CP-5-S	460	
LE-CP-1	140	Robotic cable
LE-CP-3	260	
LE-CP-5	420	
LE-CP-8	790	
LE-CP-A	980	
LE-CP-B	1460	
LE-CP-C	1940	

Signal	Connector A terminal no.	Cable colour	Connector C terminal no.
A	B-1	Brown	2
$\overline{A}$	A-1	Red	1
B	B-2	Orange	6
$\overline{B}$	A-2	Yellow	5
COM-A/COM	B-3	Green	3
COM-B/—	A-3	Blue	4
		Shield	
Vcc	B-4	Brown	12
GND	A-4	Black	13
$\overline{A}$	B-5	Red	7
A	A-5	Black	6
$\overline{B}$	B-6	Orange	9
B	A-6	Black	8
		—	3

Cable colour	Connector D terminal no.
Brown	12
Black	13
Red	7
Black	6
Orange	9
Black	8
—	3

[Robotic cable, standard cable with lock and sensor for step motor (Servo/24 VDC)]

For 3 Axes	For 4 Axes
JXC92	JXC73/83/93

LE − CP − 1 − B − □

Cable length (L) [m]

1	1.5
3	3
5	5
8	8*1
A	10*1
B	15*1
C	20*1

*1 Produced upon receipt of order (Robotic cable only)

With lock and sensor

Cable type

—	Robotic cable (Flexible cable)
S	Standard cable

LE-CP-1 3 5/Cable length: 1.5 m, 3 m, 5 m

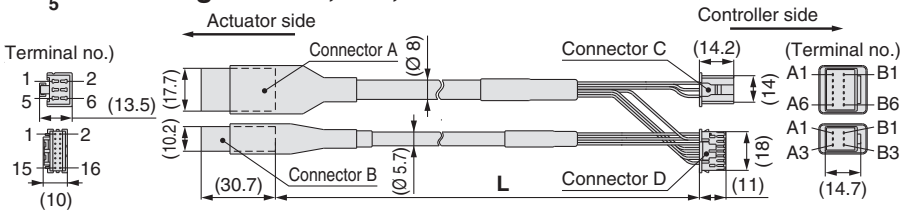

LE-CP-8 A B C/Cable length: 8 m, 10 m, 15 m, 20 m

(*1 Produced upon receipt of order)

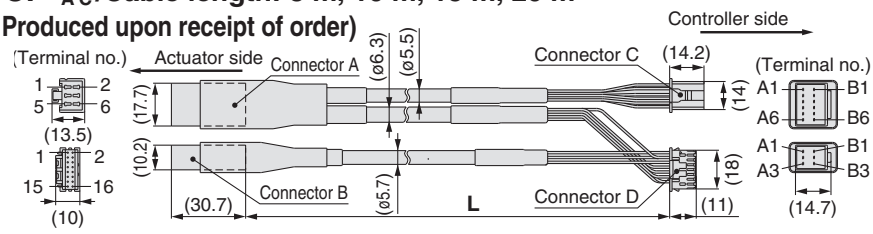

Weight

Product no.	Weight [g]	Note
LE-CP-1-B-S	240	Standard cable
LE-CP-3-B-S	380	
LE-CP-5-B-S	630	
LE-CP-1-B	190	Robotic cable
LE-CP-3-B	360	
LE-CP-5-B	590	
LE-CP-8-B	1060	
LE-CP-A-B	1320	
LE-CP-B-B	1920	
LE-CP-C-B	2620	

Signal	Connector A terminal no.	Cable colour	Connector C terminal no.
A	B-1	Brown	2
$\overline{A}$	A-1	Red	1
B	B-2	Orange	6
$\overline{B}$	A-2	Yellow	5
COM-A/COM	B-3	Green	3
COM-B/—	A-3	Blue	4
		Shield	
Vcc	B-4	Brown	12
GND	A-4	Black	13
$\overline{A}$	B-5	Red	7
A	A-5	Black	6
$\overline{B}$	B-6	Orange	9
B	A-6	Black	8
		—	3

Cable colour	Connector D terminal no.
Brown	12
Black	13
Red	7
Black	6
Orange	9
Black	8
—	3

Signal	Connector B terminal no.	Cable colour	Connector C terminal no.
Lock (+)	B-1	Red	4
Lock (–)	A-1	Black	5
Sensor (+)	B-3	Brown	1
Sensor (–)	A-3	Blue	2

AC Servo Motor Driver
LECS□/LECY□ Series

Pulse Input Type/Positioning Type

Incremental Type
LECSA Series

Pulse Input Type

Absolute Type
LECSB Series

CC-Link Direct Input Type

Absolute Type
LECSC Series

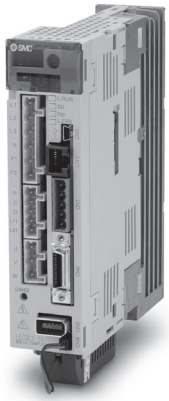

SSCNET Ⅲ Type

Absolute Type
LECSS Series

SSCNET Ⅲ/H Type

Absolute Type
LECSS-T Series

MECHATROLINK-Ⅱ Type

Absolute Type
LECYM Series

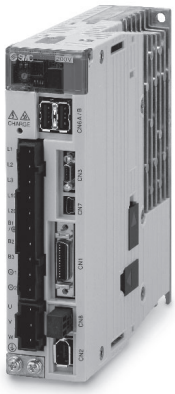

MECHATROLINK-Ⅲ Type

Absolute Type
LECYU Series

AC Servo Motor Driver

LECS□ Series

Power supply voltage	**100 to 120 VAC 200 to 230 VAC**
Motor capacity	**100/200/400 W**

Incremental Type

LECSA Series (Pulse input type/Positioning type)

- **Up to 7 positioning points by point table**
- **Input type:** Pulse input
- **Control encoder:** Incremental 17-bit encoder (Resolution: 131072 p/rev)
- **Parallel input:** 6 inputs
  output: 4 outputs

Absolute Type

LECSB Series (Pulse input type)

- **Input type:** Pulse input
- **Control encoder:** Absolute 18-bit encoder (Resolution: 262144 p/rev)
- **Parallel input:** 10 inputs
  output: 6 outputs

LECSC Series (CC-Link direct input type)

CC-Link

- **Position data/speed data setting and operation start/stop**
- **Positioning by up to 255 point tables (when 2 stations are occupied)**
- **Up to 32 drivers can be connected (when 2 stations are occupied) with CC-Link communication.**
- **Applicable Fieldbus protocol:** CC-Link (Ver. 1.10, Max. communication speed: 10 Mbps)
- **Control encoder:** Absolute 18-bit encoder (Resolution: 262144 p/rev)

LECSS Series (SSCNET Ⅲ type)

SSCNET III
SERVO SYSTEM CONTROLLER NETWORK

- **Compatible with Mitsubishi Electric's servo system controller network**
- **Reduced wiring and SSCNET Ⅲ optical cable for one-touch connection**
- **The SSCNET Ⅲ optical cable provides enhanced noise resistance.**
- **Up to 16 drivers can be connected with SSCNET Ⅲ communication.**
- **Applicable Fieldbus protocol:** SSCNET Ⅲ
  (High-speed optical communication, Max. bidirectional communication speed: 50 Mbps)
- **Control encoder:** Absolute 18-bit encoder (Resolution: 262144 p/rev)

AC Servo Motor Driver
LECSS-T Series

Power supply voltage	200 to 230 VAC
Motor capacity	100/200/400 W

SSCNET Ⅲ/H Compatible *LECSS-T Series*

- **Applicable Fieldbus protocol:** SSCNET Ⅲ/H (High-speed optical communication, max. bidirectional communication speed: 150 Mbps)
- **Bidirectional communication speed: 3 times**

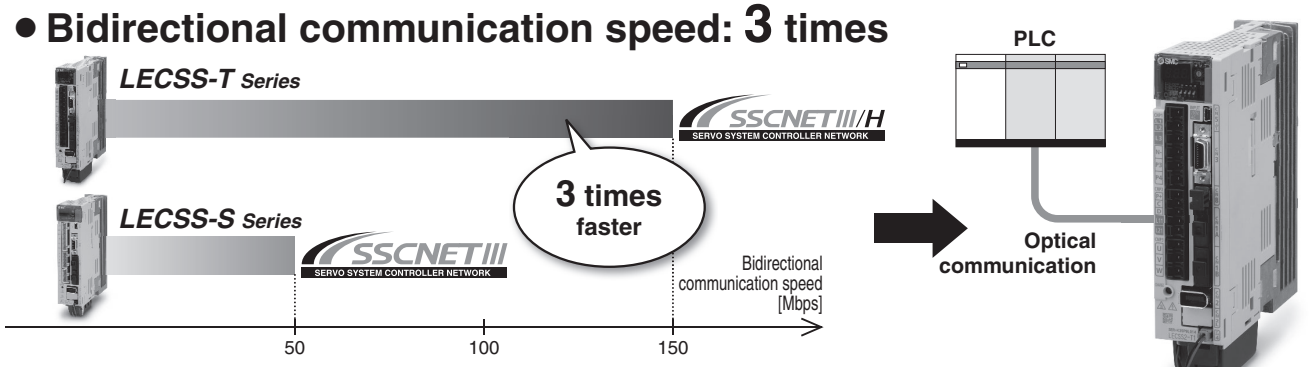

- **SSCNET Ⅲ/H and SSCNET Ⅲ products are compatible.**

SSCNET Ⅲ/H compatible products can be added to existing SSCNET Ⅲ systems for system expansion.
Reassembly of the system (new installation of master PLC) is not required.

* Note that the communication speed is that of SSCNET Ⅲ (50 Mbps).

■Communication speed: 50 Mbps

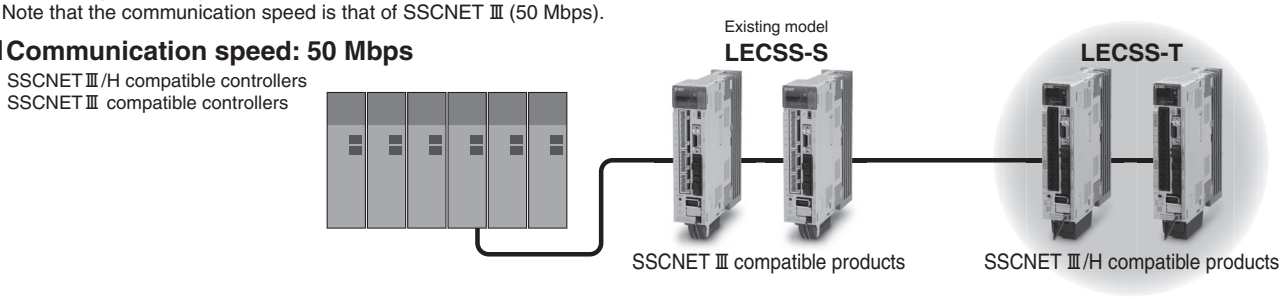

- **Improved noise resistance**
- **STO (Safe Torque Off) safety function available**
- **Control encoder: Absolute 22-bit encoder (Resolution: 4194304 p/rev)**

Absolute Type

LECSS-T Series (SSCNET Ⅲ/H type)

SSCNET Ⅲ/H SERVO SYSTEM CONTROLLER NETWORK

- **Applicable Fieldbus protocol**: SSCNET Ⅲ/H (High-speed optical communication, max. bidirectional communication speed: 150 Mbps)
- **Bidirectional communication speed**: 3 times
- **SSCNET Ⅲ/H and SSCNET Ⅲ products are compatible.**
- **Improved noise resistance**
- **STO (Safe Torque Off) safety function available**
- **Control encoder**: Absolute 22-bit encoder (Resolution: 4194304 p/rev)

AC Servo Motor Driver

LECY□ Series

Power supply voltage	200 to 230 VAC
Motor capacity	100/200/400 W

Absolute Type

LECYM Series (MECHATROLINK-Ⅱ type)

MECHATROLINK-Ⅱ

- **Applicable Fieldbus protocol**: MECHATROLINK-Ⅱ
- **Number of connectable drivers**: 30 units (Transmission distance: Max. 50 m in total)
- **Max. transmission speed**: 10 Mbps
- **Min. transmission cycle**: 250 μs
- **Control encoder**: Absolute 20-bit encoder (Resolution: 1048576 p/rev)
- **STO (Safe Torque Off) safety function available**
- **Compliant with the SEMI F47 Standard (Torque limit for low DC power supply voltage for main circuit)**

LECYU Series (MECHATROLINK-Ⅲ type)

MECHATROLINK-Ⅲ

- **Applicable Fieldbus protocol**: MECHATROLINK-Ⅲ
- **Number of connectable drivers**: 62 units (Transmission distance: Max. 75 m between stations)
- **Max. transmission speed**: 100 Mbps
- **Min. transmission cycle**: 125 μs
- **Control encoder**: Absolute 20-bit encoder (Resolution: 1048576 p/rev)
- **STO (Safe Torque Off) safety function available**
- **Compliant with the SEMI F47 Standard (Torque limit for low DC power supply voltage for main circuit)**

AC Servo Motor Driver
Incremental Type
LECSA Series **(Pulse Input Type/Positioning Type)**
Absolute Type
LECSB **(Pulse Input Type)** ***/LECSC*** **(CC-Link Direct Input Type)**
LECSS **(SSCNET Ⅲ Type)** ***/LECSS-T*** **(SSCNET Ⅲ/H Type)** ***Series***

LECSA LECSB LECSC LECSS LECSS-T

CE c UL us LISTED ＊ LECSS-T only RoHS

How to Order

LECSA/LECSB/LECSC/LECSS

LECS A 1 – S1

Driver type

A	Pulse input type/Positioning type (For incremental encoder)
B	Pulse input type (For absolute encoder)
C	CC-Link direct input type (For absolute encoder)
S	SSCNET Ⅲ type (For absolute encoder)

Power supply voltage

1	100 to 120 VAC, 50/60 Hz
2	200 to 230 VAC, 50/60 Hz

Compatible motor type

Symbol	Type	Capacity	Encoder
S1	AC servo motor (S2*1)	100 W	Incremental
S3	AC servo motor (S3*1)	200 W	
S4	AC servo motor (S4*1)*2	400 W	
S5	AC servo motor (S6*1)	100 W	Absolute
S7	AC servo motor (S7*1)	200 W	
S8	AC servo motor (S8*1)*2	400 W	

∗1 The symbol shows the motor type (actuator).
∗2 Only available for power supply voltage "200 to 230 VAC"

＊ **If an I/O connector (CN1) is required, order the part number "LE-CSN□" separately.**
＊ **If an I/O cable (CN1) is required, order the part number "LEC-CSN□-1" separately.**
(Since the electric actuator will not operate without emergency stop (EMG) wiring for the LECSB, an I/O connector or an I/O cable is required.)

LECSS-T

LECS S 2 – T5

Driver type

S	SSCNET Ⅲ/H type (For absolute encoder)

Power supply voltage

2	200 to 240 VAC, 50/60 Hz

Compatible motor type

Symbol	Type	Capacity	Encoder
T5	AC servo motor (T6*1)	100 W	Absolute
T7	AC servo motor (T7*1)	200 W	
T8	AC servo motor (T8*1)	400 W	

∗1 The symbol shows the motor type (actuator).

＊ **If an I/O connector (CN1) is required, order the part number "LE-CSNS" separately.**
＊ **If an I/O cable (CN1) is required, order the part number "LEC-CSNS-1" separately.**

Dimensions

LECSA□

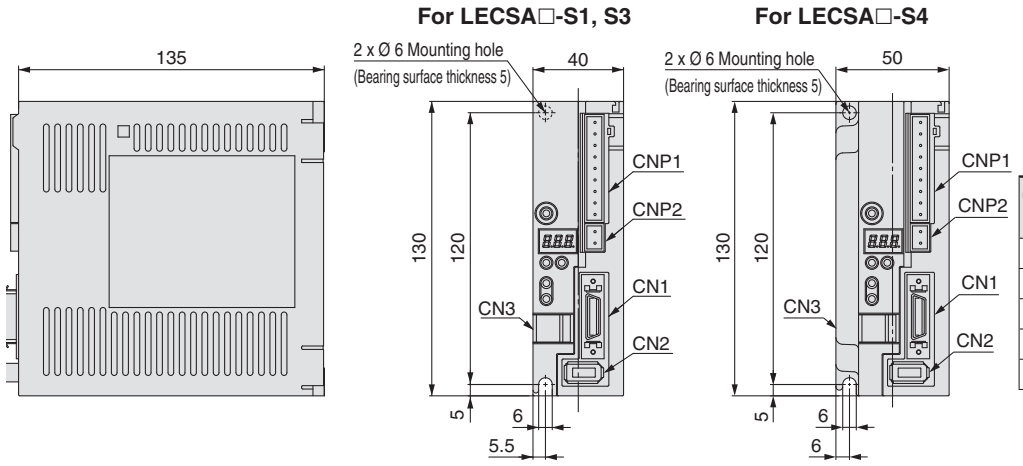

Connector name	Description
CN1	I/O signal connector
CN2	Encoder connector
CN3	USB communication connector
CNP1	Main circuit power supply connector
CNP2	Control circuit power supply connector

LECSB□

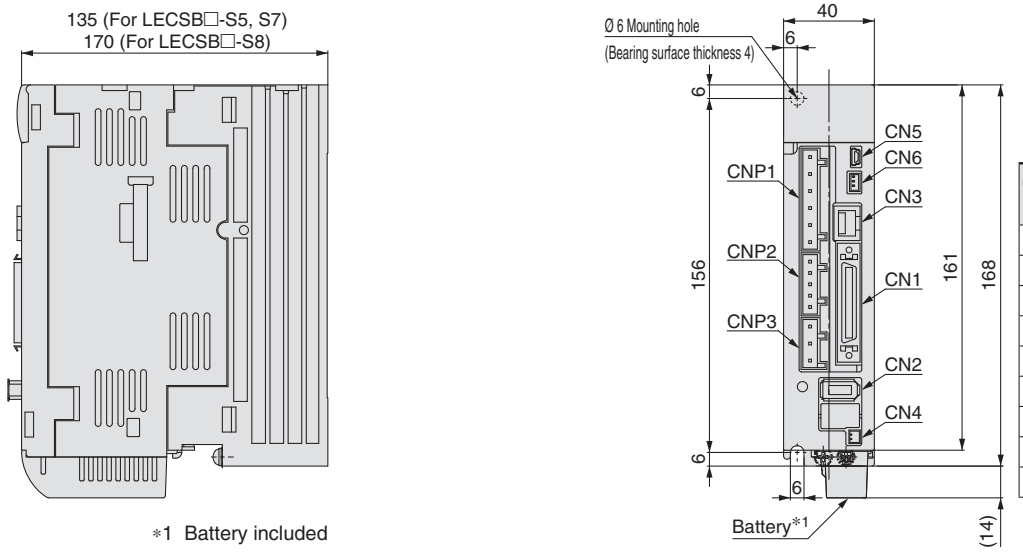

*1 Battery included

Connector name	Description
CN1	I/O signal connector
CN2	Encoder connector
CN3	RS-422 communication connector
CN4	Battery connector
CN5	USB communication connector
CN6	Analogueue monitor connector
CNP1	Main circuit power supply connector
CNP2	Control circuit power supply connector
CNP3	Servo motor power connector

Dimensions

LECSC□

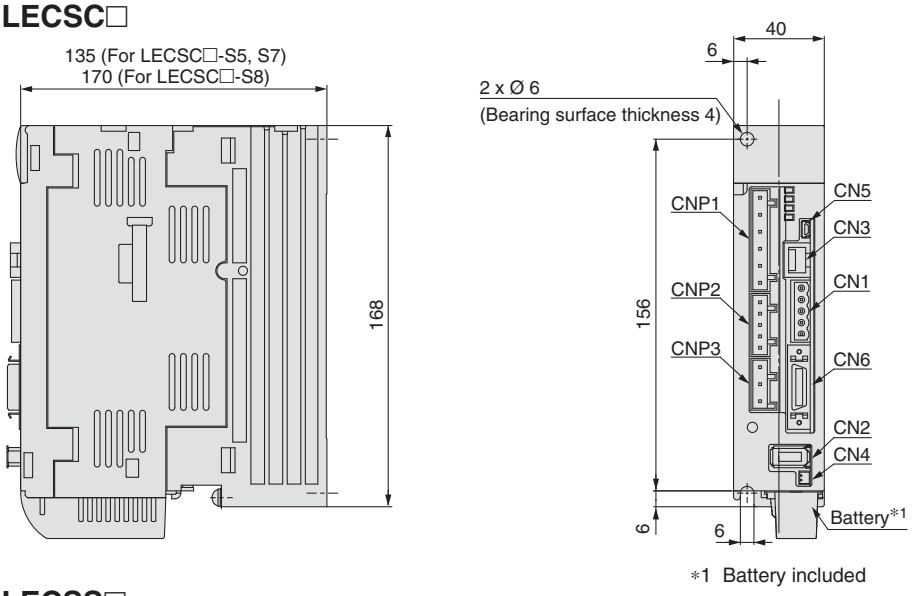

*1 Battery included

Connector name	Description
CN1	CC-Link connector
CN2	Encoder connector
CN3	RS-422 communication connector
CN4	Battery connector
CN5	USB communication connector
CN6	I/O signal connector
CNP1	Main circuit power supply connector
CNP2	Control circuit power supply connector
CNP3	Servo motor power connector

LECSS□

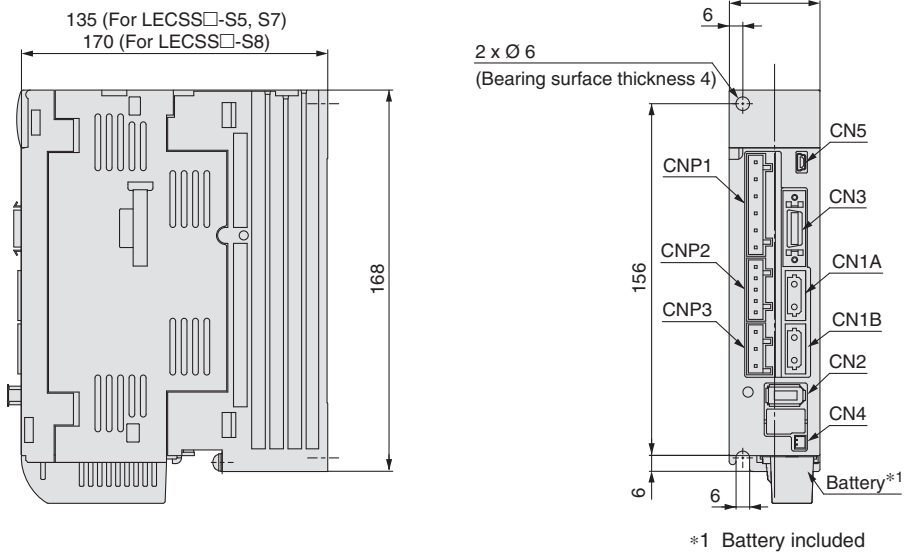

*1 Battery included

Connector name	Description
CN1A	Front axis connector for SSCNET Ⅲ optical cable
CN1B	Rear axis connector for SSCNET Ⅲ optical cable
CN2	Encoder connector
CN3	I/O signal connector
CN4	Battery connector
CN5	USB communication connector
CNP1	Main circuit power supply connector
CNP2	Control circuit power supply connector
CNP3	Servo motor power connector

LECSS2-T□

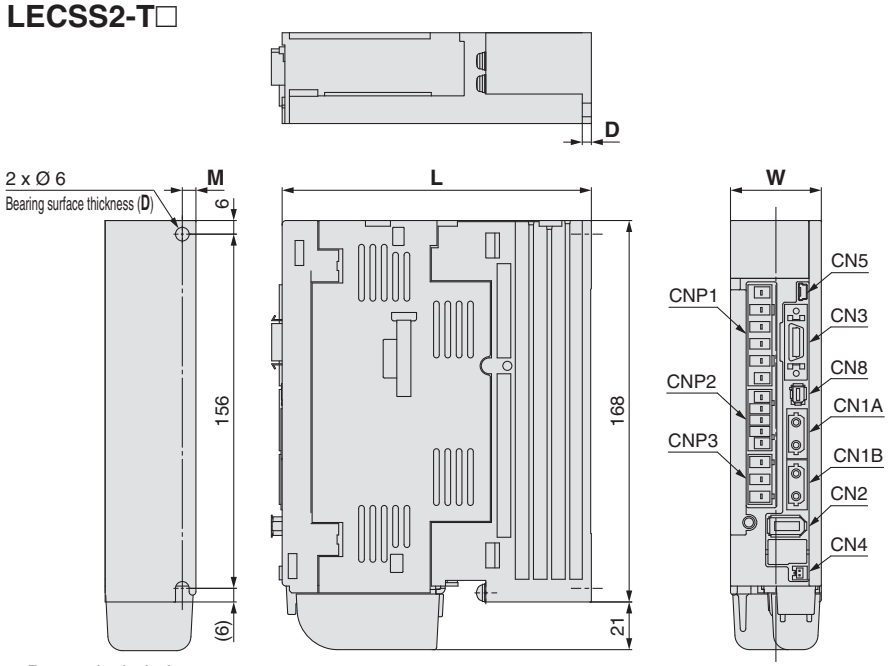

∗ Battery included

Connector name	Description
CN1A	Front axis connector for SSCNET Ⅲ/H
CN1B	Rear axis connector for SSCNET Ⅲ/H
CN2	Encoder connector
CN3	I/O signal connector
CN4	Battery connector
CN5	USB communication connector
CN8	STO input signal connector
CNP1	Main circuit power supply connector
CNP2	Control circuit power supply connector
CNP3	Servo motor power connector

Dimensions [mm]

Model	W	L	D	M
LECSS2-T5	40	135	4	6
LECSS2-T7				
LECSS2-T8		170	5	

Specifications

LECSA Series

Model		LECSA1-S1	LECSA1-S3	LECSA2-S1	LECSA2-S3	LECSA2-S4
Compatible motor capacity [W]		100	200	100	200	400
Compatible encoder		Incremental 17-bit encoder (Resolution: 131072 p/rev)				
Main power supply	Power voltage [V]	Single phase 100 to 120 VAC (50/60 Hz)		Single phase 200 to 230 VAC (50/60 Hz)		
	Allowable voltage fluctuation [V]	Single phase 85 to 132 VAC		Single phase 170 to 253 VAC		
	Rated current [A]	3.0	5.0	1.5	2.4	4.5
Control power supply	Control power supply voltage [V]	24 VDC				
	Allowable voltage fluctuation [V]	21.6 to 26.4 VDC				
	Rated current [A]	0.5				
Parallel input		6 inputs				
Parallel output		4 outputs				
Max. input pulse frequency [pps]		1 M (for differential receiver), 200 k (for open collector)*2				
Function	In-position range setting [pulse]	0 to ±65535 (Command pulse unit)				
	Error excessive	±3 rotations				
	Torque limit	Parameter setting				
	Communication	USB communication				
Operating temperature range [°C]		0 to 55 (No freezing)				
Operating humidity range [%RH]		90 or less (No condensation)				
Storage temperature range [°C]		–20 to 65 (No freezing)				
Storage humidity range [%RH]		90 or less (No condensation)				
Insulation resistance [MΩ]		Between the housing and SG: 10 (500 VDC)				
Weight [g]		600				700

LECSB Series

Model		LECSB1-S5	LECSB1-S7	LECSB2-S5	LECSB2-S7	LECSB2-S8
Compatible motor capacity [W]		100	200	100	200	400
Compatible encoder		Absolute 18-bit encoder (Resolution: 262144 p/rev)				
Main power supply	Power voltage [V]	Single phase 100 to 120 VAC (50/60 Hz)		Three phase 200 to 230 VAC (50/60 Hz) Single phase 200 to 230 VAC (50/60 Hz)		
	Allowable voltage fluctuation [V]	Single phase 85 to 132 VAC		Three phase 170 to 253 VAC Single phase 170 to 253 VAC		
	Rated current [A]	3.0	5.0	0.9	1.5	2.6
Control power supply	Control power supply voltage [V]	Single phase 100 to 120 VAC (50/60 Hz)		Single phase 200 to 230 VAC (50/60 Hz)		
	Allowable voltage fluctuation [V]	Single phase 85 to 132 VAC		Single phase 170 to 253 VAC		
	Rated current [A]	0.4		0.2		
Parallel input		10 inputs				
Parallel output		6 outputs				
Max. input pulse frequency [pps]		1 M (for differential receiver), 200 k (for open collector)*2				
Function	In-position range setting [pulse]	0 to ±10000 (Command pulse unit)				
	Error excessive	±3 rotations				
	Torque limit	Parameter setting or external analogue input setting (0 to 10 VDC)				
	Communication	USB communication, RS422 communication*1				
Operating temperature range [°C]		0 to 55 (No freezing)				
Operating humidity range [%RH]		90 or less (No condensation)				
Storage temperature range [°C]		–20 to 65 (No freezing)				
Storage humidity range [%RH]		90 or less (No condensation)				
Insulation resistance [MΩ]		Between the housing and SG: 10 (500 VDC)				
Weight [g]		800				1000

*1 USB communication and RS422 communication cannot be performed at the same time.
*2 If the command pulse input is open collector method, it supports only the sink (NPN) type interface. It does not correspond to the source (PNP) type interface.

Specifications

LECSC Series

Model			LECSC1-S5	LECSC1-S7	LECSC2-S5	LECSC2-S7	LECSC2-S8
Compatible motor capacity [W]			100	200	100	200	400
Compatible encoder			Absolute 18-bit encoder (Resolution: 262144 p/rev)				
Main power supply	**Power voltage [V]**		Single phase 100 to 120 VAC (50/60 Hz)		Three phase 200 to 230 VAC (50/60 Hz) Single phase 200 to 230 VAC (50/60 Hz)		
	Allowable voltage fluctuation [V]		Single phase 85 to 132 VAC		Three phase 170 to 253 VAC Single phase 170 to 253 VAC		
	Rated current [A]		3.0	5.0	0.9	1.5	2.6
Control power supply	**Control power supply voltage [V]**		Single phase 100 to 120 VAC (50/60 Hz)		Single phase 200 to 230 VAC (50/60 Hz)		
	Allowable voltage fluctuation [V]		Single phase 85 to 132 VAC		Single phase 170 to 253 VAC		
	Rated current [A]		0.4		0.2		
Communication specifications	**Applicable Fieldbus protocol (Version)**		CC-Link communication (Ver. 1.10)				
	Connection cable		CC-Link Ver. 1.10 compliant cable (Shielded 3-core twisted pair cable)*1				
	Remote station number		1 to 64				
	Cable length	**Communication speed [bps]**	16 k	625 k	2.5 M	5 M	10 M
		Maximum overall cable length [m]	1200	900	400	160	100
		Cable length between stations [m]	0.2 or more				
	I/O occupation area (Inputs/Outputs)		1 station occupied (Remote I/O 32 points/32 points)/(Remote register 4 words/4 words) 2 stations occupied (Remote I/O 64 points/64 points)/(Remote register 8 words/8 words)				
	Number of connectable drivers		Up to 42 (when 1 station is occupied by 1 driver), Up to 32 (when 2 stations are occupied by 1 driver), when there are only remote device stations.				
Command method	**Remote register input**		Available with CC-Link communication (2 stations occupied)				
	Point table No. input		Available with CC-Link communication, RS422 communication CC-Link communication (1 station occupied): 31 points CC-Link communication (2 stations occupied): 255 points RS422 communication: 255 points				
	Indexer positioning input		Available with CC-Link communication CC-Link communication (1 station occupied): 31 points CC-Link communication (2 stations occupied): 255 points				
Communication function			USB communication, RS-422 communication*2				
Operating temperature range [°C]			0 to 55 (No freezing)				
Operating humidity range [%RH]			90 or less (No condensation)				
Storage temperature range [°C]			–20 to 65 (No freezing)				
Storage humidity range [%RH]			90 or less (No condensation)				
Insulation resistance [MΩ]			Between the housing and SG: 10 (500 VDC)				
Weight [g]			800				1000

*1 If the system comprises of both CC-Link Ver. 1.00 and Ver. 1.10 compliant cables, Ver. 1.00 specifications are applied to the overall cable length and the cable length between stations.
*2 USB communication and RS422 communication cannot be performed at the same time.

LECSS Series

Model		LECSS1-S5	LECSS1-S7	LECSS2-S5	LECSS2-S7	LECSS2-S8
Compatible motor capacity [W]		100	200	100	200	400
Compatible encoder		Absolute 18-bit encoder (Resolution: 262144 p/rev)				
Main power supply	**Power voltage [V]**	Single phase 100 to 120 VAC (50/60 Hz)		Three phase 200 to 230 VAC (50/60 Hz) Single phase 200 to 230 VAC (50/60 Hz)		
	Allowable voltage fluctuation [V]	Single phase 85 to 132 VAC		Three phase 170 to 253 VAC Single phase 170 to 253 VAC		
	Rated current [A]	3.0	5.0	0.9	1.5	2.6
Control power supply	**Control power supply voltage [V]**	Single phase 100 to 120 VAC (50/60 Hz)		Single phase 200 to 230 VAC (50/60 Hz)		
	Allowable voltage fluctuation [V]	Single phase 85 to 132 VAC		Single phase 170 to 253 VAC		
	Rated current [A]	0.4		0.2		
Applicable Fieldbus protocol		SSCNET Ⅲ (High-speed optical communication)				
Communication function		USB communication				
Operating temperature range [°C]		0 to 55 (No freezing)				
Operating humidity range [%RH]		90 or less (No condensation)				
Storage temperature range [°C]		–20 to 65 (No freezing)				
Storage humidity range [%RH]		90 or less (No condensation)				
Insulation resistance [MΩ]		Between the housing and SG: 10 (500 VDC)				
Weight [g]		800				1000

Specifications

LECSS-T Series

Model		LECSS2-T5	LECSS2-T7	LECSS2-T8
Compatible motor capacity [W]		100	200	400
Compatible encoder		Absolute 22-bit encoder (Resolution: 4194304 p/rev)		
Main power supply	Power voltage [V]	Three phase 200 to 240 VAC (50/60 Hz), Single phase 200 to 240 VAC (50/60 Hz)		
	Allowable voltage fluctuation [V]	Three phase 170 to 264 VAC (50/60 Hz), Single phase 170 to 264 VAC (50/60 Hz)		
	Rated current [A]	0.9	1.5	2.6
Control power supply	Control power supply voltage [V]	Single phase 200 to 240 VAC (50/60 Hz)		
	Allowable voltage fluctuation [V]	Single phase 170 to 264 VAC		
	Rated current [A]	0.2		
Applicable Fieldbus protocol		SSCNET Ⅲ/H (High-speed optical communication)		
Communication function		USB communication		
Operating temperature range [°C]		0 to 55 (No freezing)		
Operating humidity range [%RH]		90 or less (No condensation)		
Storage temperature range [°C]		–20 to 65 (No freezing)		
Storage humidity range [%RH]		90 or less (No condensation)		
Insulation resistance [MΩ]		Between the housing and SG: 10 (500 VDC)		
Weight [g]		800		1000

Power Supply Wiring Example: LECSA

LECSA□-□

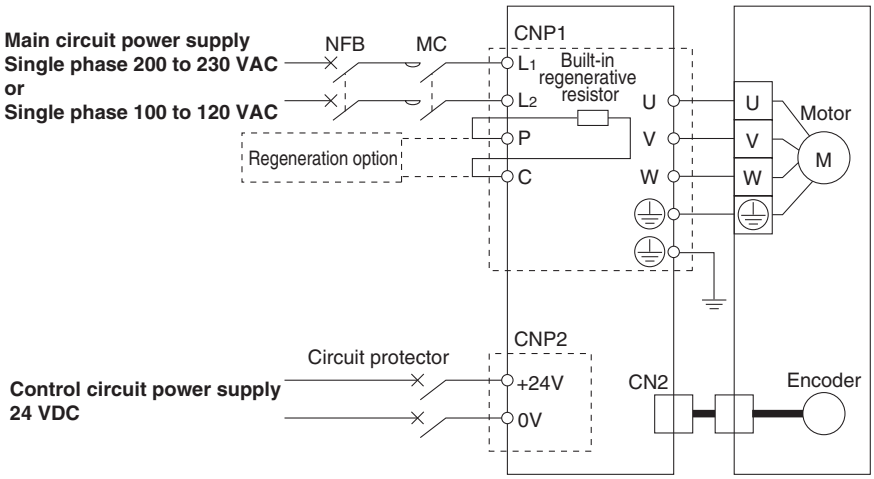

Main Circuit Power Supply Connector: CNP1

∗ Accessory

Terminal name	Function	Details
⏚	Protective earth (PE)	Should be grounded by connecting the servo motor's earth terminal and the control panel's protective earth (PE)
L_1	Main circuit power supply	Connect the main circuit power supply. LECSA1: Single phase 100 to 120 VAC, 50/60 Hz LECSA2: Single phase 200 to 230 VAC, 50/60 Hz
L_2		
P	Regeneration option	Terminal to connect regeneration option LECSA□-S1: Not connected at time of shipping LECSA□-S3, S4: Connected at time of shipping ∗ If regeneration option is required for "Model Selection," connect to this terminal.
C		
U	Servo motor power (U)	Connect to motor cable (U, V, W).
V	Servo motor power (V)	
W	Servo motor power (W)	

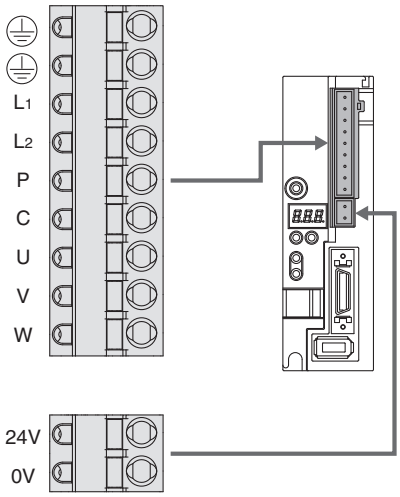

Control Circuit Power Supply Connector: CNP2

∗ Accessory

Terminal name	Function	Details
24V	Control circuit power supply (24 V)	24 V side of the control circuit power supply (24 VDC) supplied to the driver
0V	Control circuit power supply (0 V)	0 V side of the control circuit power supply (24 VDC) supplied to the driver

Power Supply Wiring Example: LECSB, LECSC, LECSS

LECSB1-□
LECSC1-□
LECSS1-□

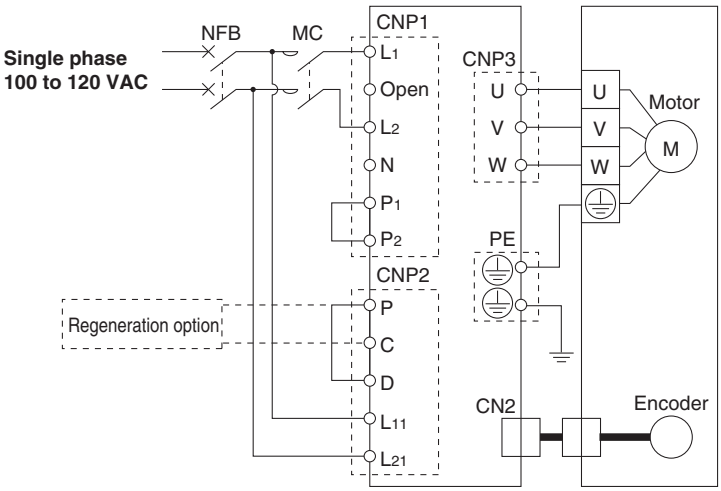

LECSB2-□
LECSC2-□
LECSS2-□

For single phase 200 VAC

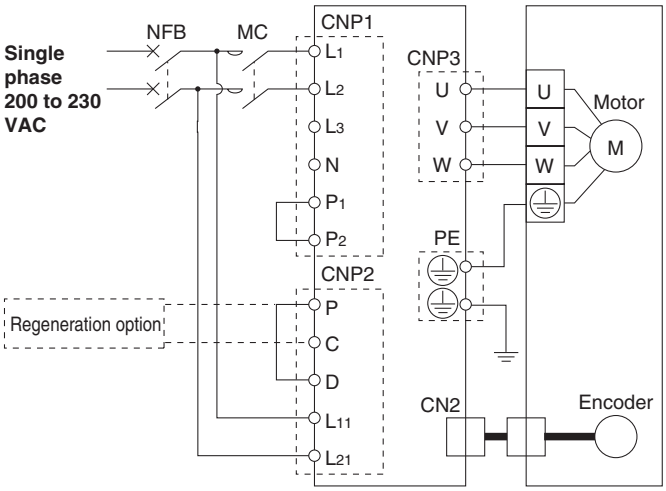

For three phase 200 VAC

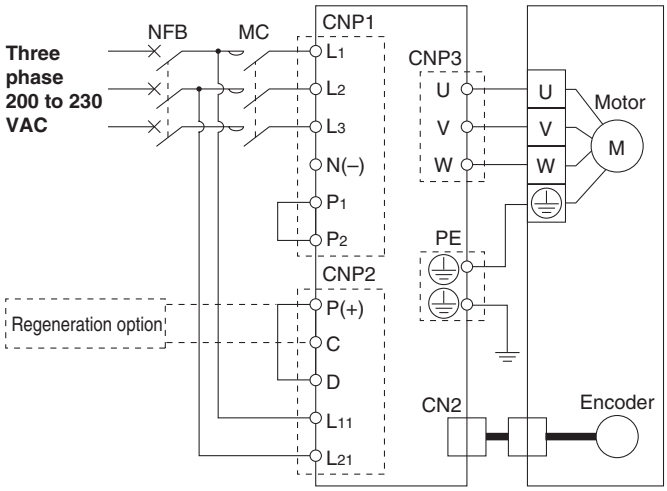

∗ For single phase 200 to 230 VAC, power supply should be connected to L_1 and L_2 terminals, with nothing connected to L_3.

Main Circuit Power Supply Connector: CNP1 ∗ Accessory

Terminal name	Function	Details
L_1	Main circuit power supply	Connect the main circuit power supply. LECSB1/LECSC1/LECSS1: Single phase 100 to 120 VAC, 50/60 Hz Connection terminal: L_1, L_2 LECSB2/LECSC2/LECSS2: Single phase 200 to 230 VAC, 50/60 Hz Connection terminal: L_1, L_2 Three phase 200 to 230 VAC, 50/60 Hz Connection terminal: L_1, L_2, L_3
L_2		
L_3		
N	Do not connect.	
P_1	Connect between P_1 and P_2. (Connected at time of shipping)	
P_2		

Control Circuit Power Supply Connector: CNP2 ∗ Accessory

Terminal name	Function	Details
P	Regeneration option	Connect between P and D. (Connected at time of shipping) ∗ If regeneration option is required for "Model Selection," connect to this terminal.
C		
D		
L_{11}	Control circuit power supply	Connect the control circuit power supply. LECSB1/LECSC1/LECSS1: Single phase 100 to 120 VAC, 50/60 Hz Connection terminal: L_{11}, L_{21} LECSB2/LECSC2/LECSS2: Single phase 200 to 230 VAC, 50/60 Hz Connection terminal: L_{11}, L_{21} Three phase 200 to 230 VAC, 50/60 Hz Connection terminal: L_{11}, L_{21}
L_{21}		

Motor Connector: CNP3 ∗ Accessory

Terminal name	Function	Details
U	Servo motor power (U)	Connect to motor cable (U, V, W).
V	Servo motor power (V)	
W	Servo motor power (W)	

LECSB Front view example

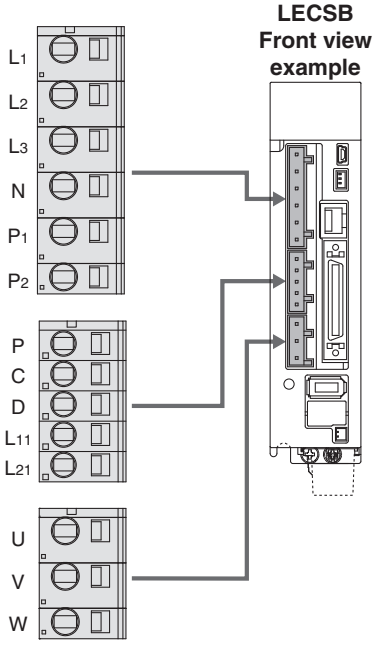

Power Supply Wiring Example: LECSS2-T□

For single phase 200 VAC

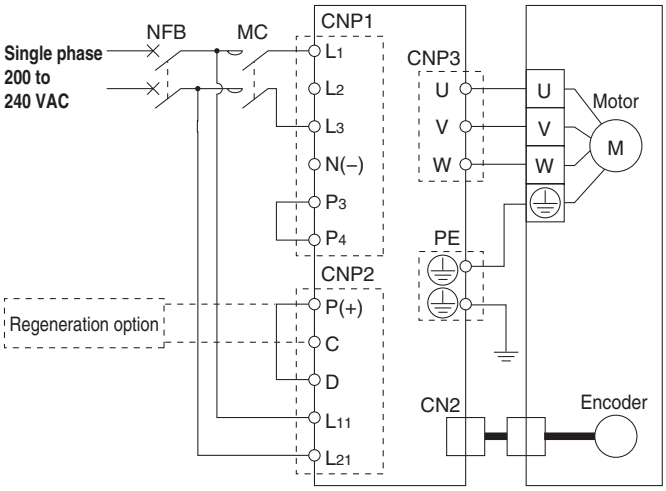

For three phase 200 VAC

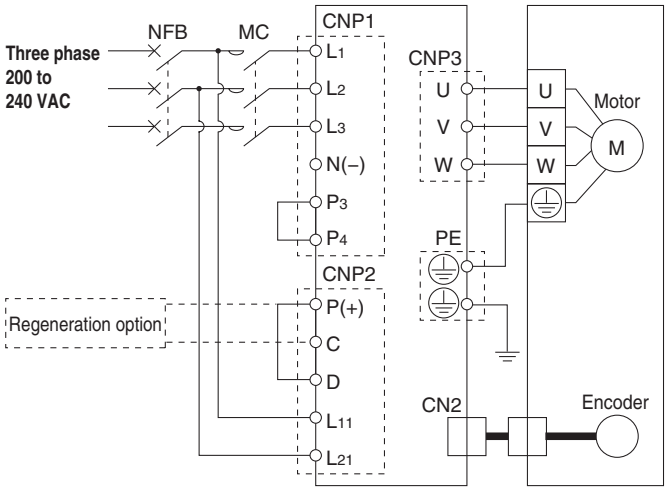

∗ For single phase 200 to 240 VAC, power supply should be connected to L_1 and L_3 terminals, with nothing connected to L_2. Please note that the wiring locations differ from the LECS□.

Main Circuit Power Supply Connector: CNP1 ∗ Accessory

Terminal name	Function	Details
L_1	Main circuit power supply	Connect the main circuit power supply. LECSS2: Single phase 200 to 240 VAC, 50/60 Hz Connection terminal: L_1, L_3 Three phase 200 to 240 VAC, 50/60 Hz Connection terminal: L_1, L_2, L_3
L_2		
L_3		
N(–)	Do not connect.	
P_3	Connect between P_3 and P_4. (Connected at time of shipping)	
P_4		

Control Circuit Power Supply Connector: CNP2 ∗ Accessory

Terminal name	Function	Details
P(+)	Regeneration option	Connect between P(+) and D. (Connected at time of shipping) ∗ If regeneration option is required for "Model Selection," connect to this terminal.
C		
D		
L_{11}	Control circuit power supply	Connect the control circuit power supply. LECSS2: Single phase 200 to 240 VAC, 50/60 Hz Connection terminal: L_{11}, L_{21} Three phase 200 to 240 VAC, 50/60 Hz Connection terminal: L_{11}, L_{21}
L_{21}		

Motor Connector: CNP3 ∗ Accessory

Terminal name	Function	Details
U	Servo motor power (U)	Connect to motor cable (U, V, W).
V	Servo motor power (V)	
W	Servo motor power (W)	

LECSS2-T□ Front view example

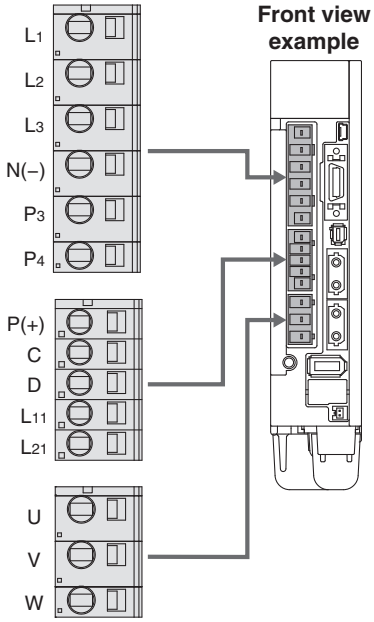

Control Signal Wiring Example: LECSA

LECSA□-□

This wiring example shows connection with a PLC (FX3U-□□MT/ES) manufactured by Mitsubishi Electric Corporation as when used in position control mode. Refer to the LECSA series Operation Manual and any technical literature or operation manuals for your PLC and positioning unit before connecting to another PLC or positioning unit.

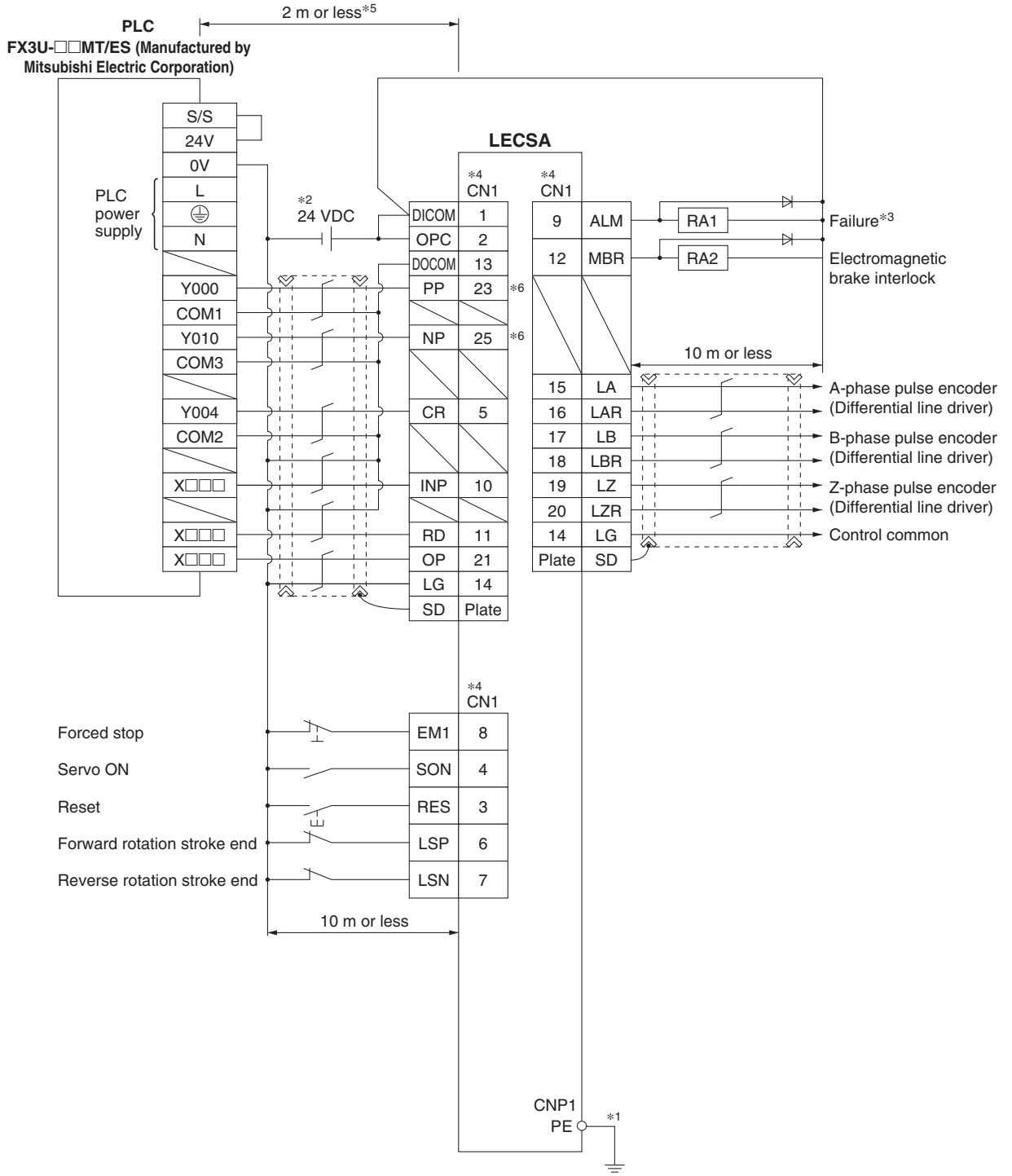

*1 For preventing electric shock, be sure to connect the driver main circuit power supply connector (CNP1)'s protective earth (PE) terminal (marked ⏚) to the control panel's protective earth (PE).
*2 For interface use, supply 24 VDC ±10 % 200 mA using an external source. 200 mA is the value when all I/O command signals are being used. In addition, reducing the number of inputs/outputs can decrease the current capacity. Refer to the Operation Manual for required current for interface.
*3 The failure (ALM) is normally ON. When it is OFF (alarm occurs), stop the PLC signal using the sequence program.
*4 Signals of the same name are connected inside the driver.
*5 For command pulse input with an open collector method. When a positioning unit loaded with a differential line driver method is used, it is 10 m or less.
*6 If the command pulse input is open collector method, it supports only the sink (NPN) type interface. It does not correspond to the source (PNP) type interface.

Control Signal Wiring Example: LECSB

This wiring example shows connection with a positioning unit (QD75D) manufactured by Mitsubishi Electric Corporation as when used in position control mode. Refer to the LECSB series Operation Manual and any technical literature or operation manuals for your PLC and positioning unit before connecting to another PLC or positioning unit.

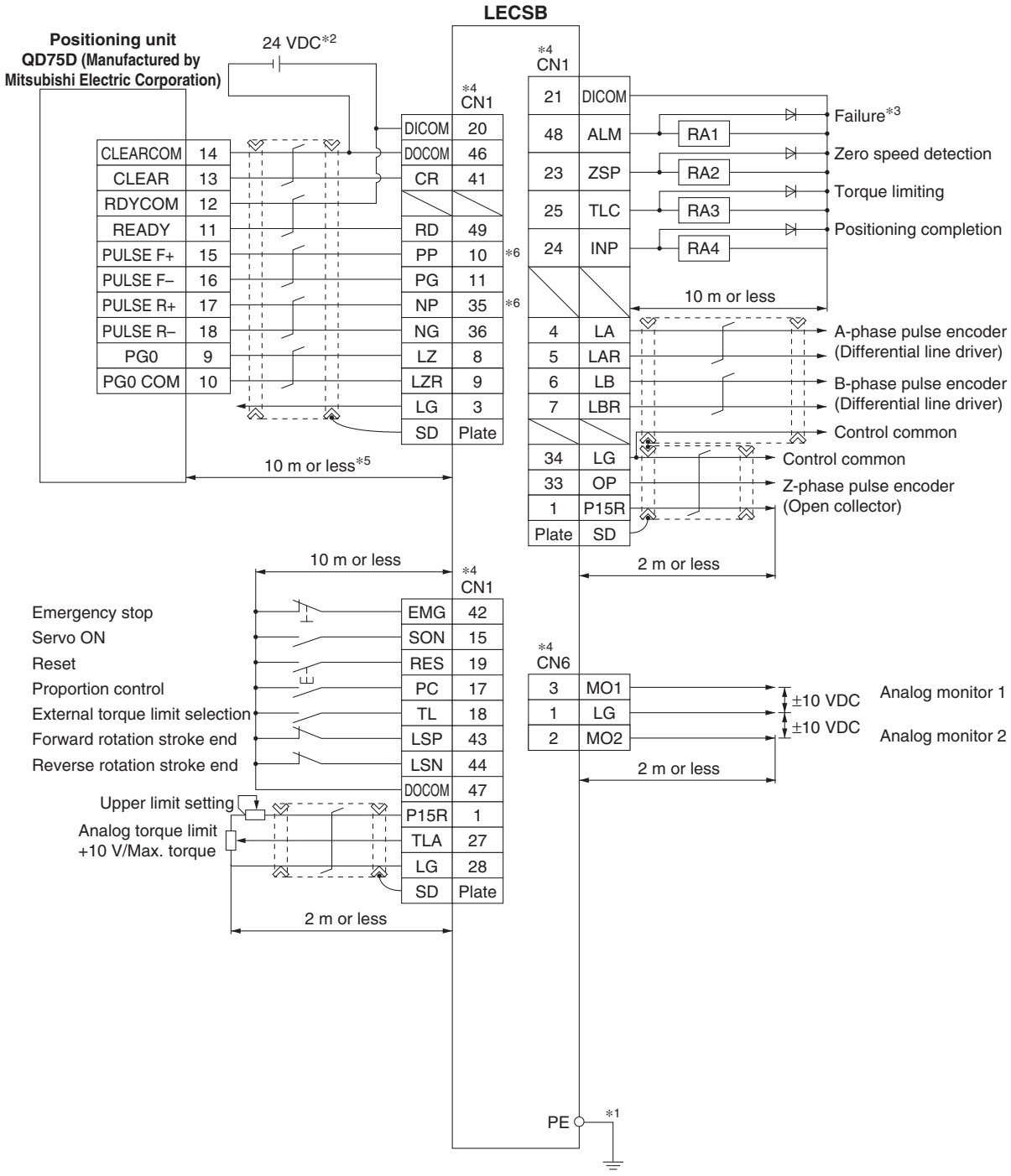

*1 For preventing electric shock, be sure to connect the driver's protective earth (PE) terminal (marked ⏚) to the control panel's protective earth (PE).
*2 For interface use, supply 24 VDC ±10 % 300 mA using an external source.
*3 The failure (ALM) is normally ON. When it is OFF (alarm occurs), stop the PLC signal using the sequence program.
*4 Signals of the same name are connected inside the driver.
*5 For command pulse input with a differential line driver method. For open collector method, it is 2 m or less.
*6 If the command pulse input is open collector method, it supports only the sink (NPN) type interface. It does not correspond to the source (PNP) type interface.

Control Signal Wiring Example: LECSC

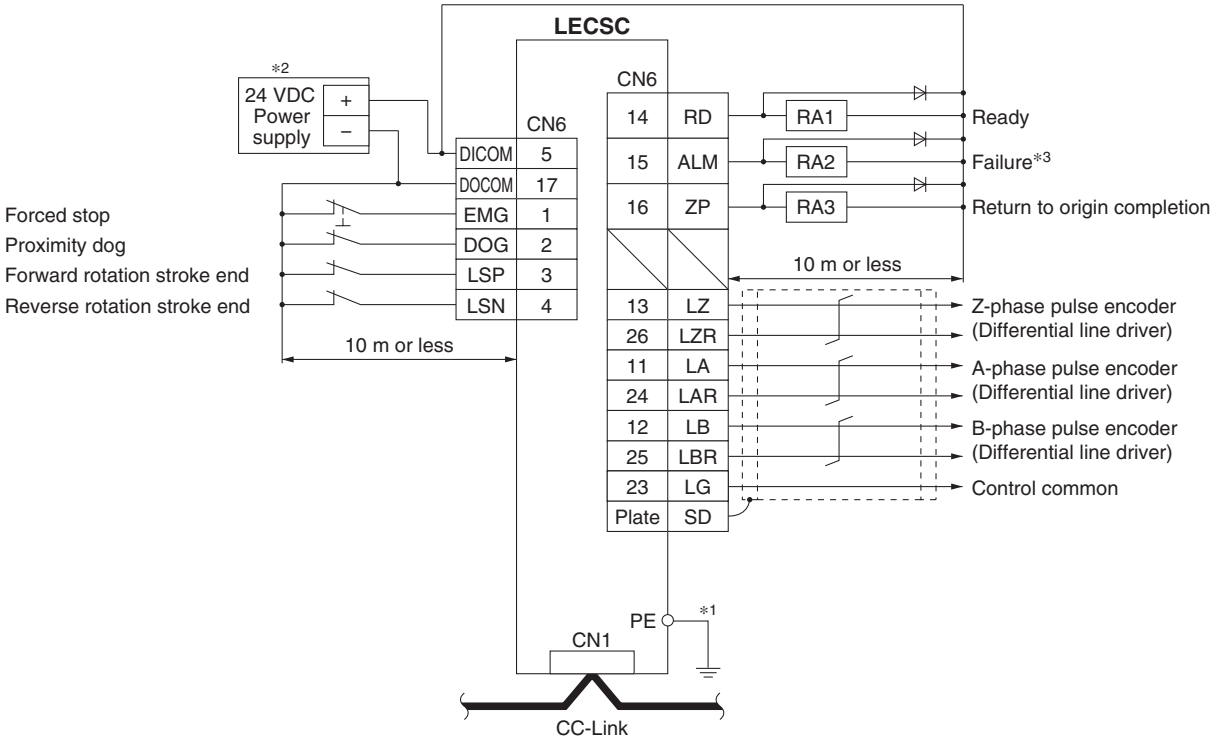

*1 For preventing electric shock, be sure to connect the driver's protective earth (PE) terminal (marked ⏚) to the control panel's protective earth (PE).
*2 For interface use, supply 24 VDC ±10 % 150 mA using an external source.
*3 The failure (ALM) is normally ON. When it is OFF (alarm occurs), stop the PLC signal using the sequence program.

Control Signal Wiring Example: LECSS

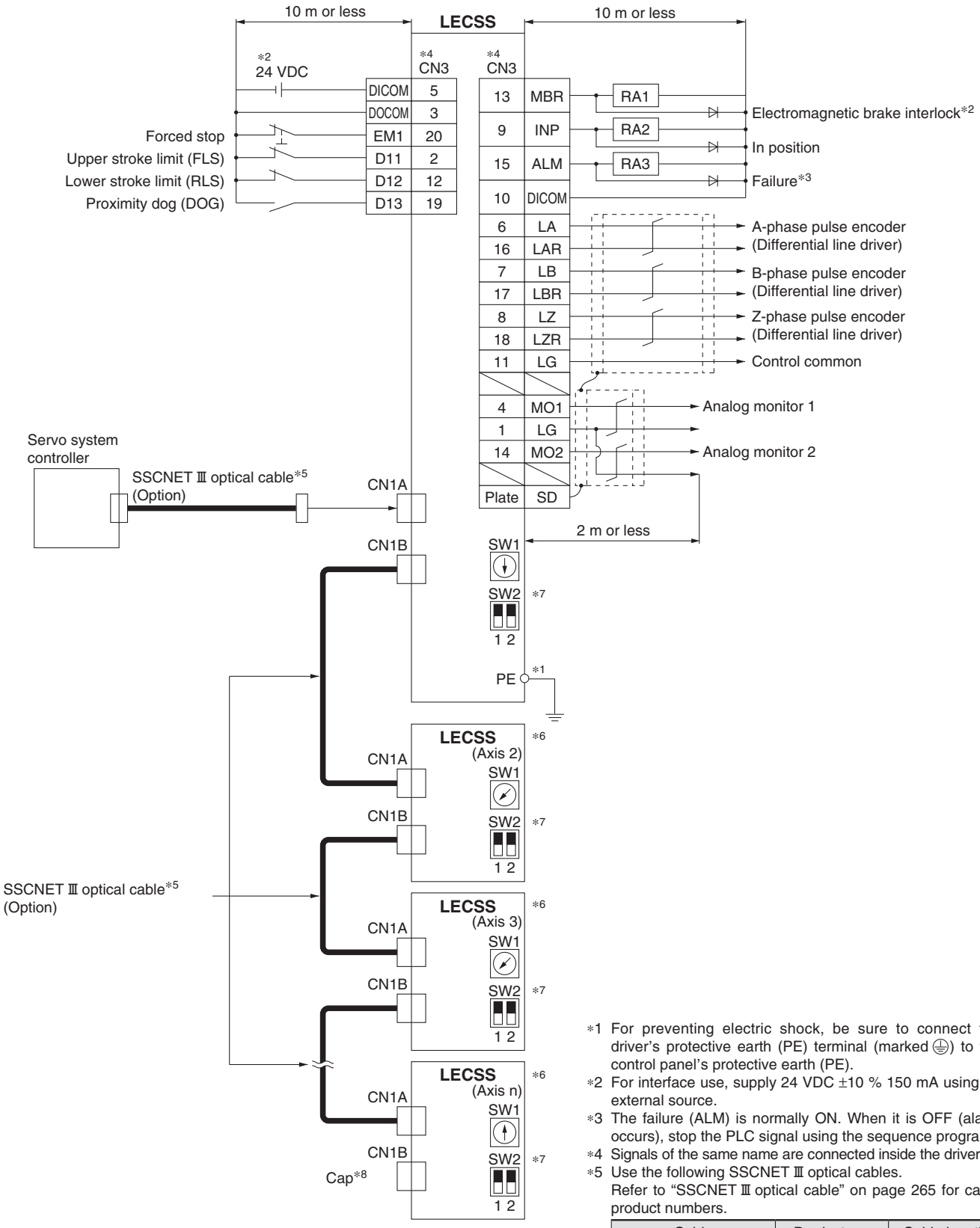

*1 For preventing electric shock, be sure to connect the driver's protective earth (PE) terminal (marked ⏚) to the control panel's protective earth (PE).
*2 For interface use, supply 24 VDC ±10 % 150 mA using an external source.
*3 The failure (ALM) is normally ON. When it is OFF (alarm occurs), stop the PLC signal using the sequence program.
*4 Signals of the same name are connected inside the driver.
*5 Use the following SSCNET Ⅲ optical cables.
Refer to "SSCNET Ⅲ optical cable" on page 265 for cable product numbers.

Cable	Product no.	Cable length
SSCNET Ⅲ optical cable	**LE-CSS-□**	0.15 m to 3 m

*6 Connections from Axis 2 onward are omitted.
*7 Up to 16 axes can be set.
*8 Be sure to place a cap on unused CN1A/CN1B.

Control Signal Wiring Example: LECSS2-T□

For sink (NPN) I/O interface

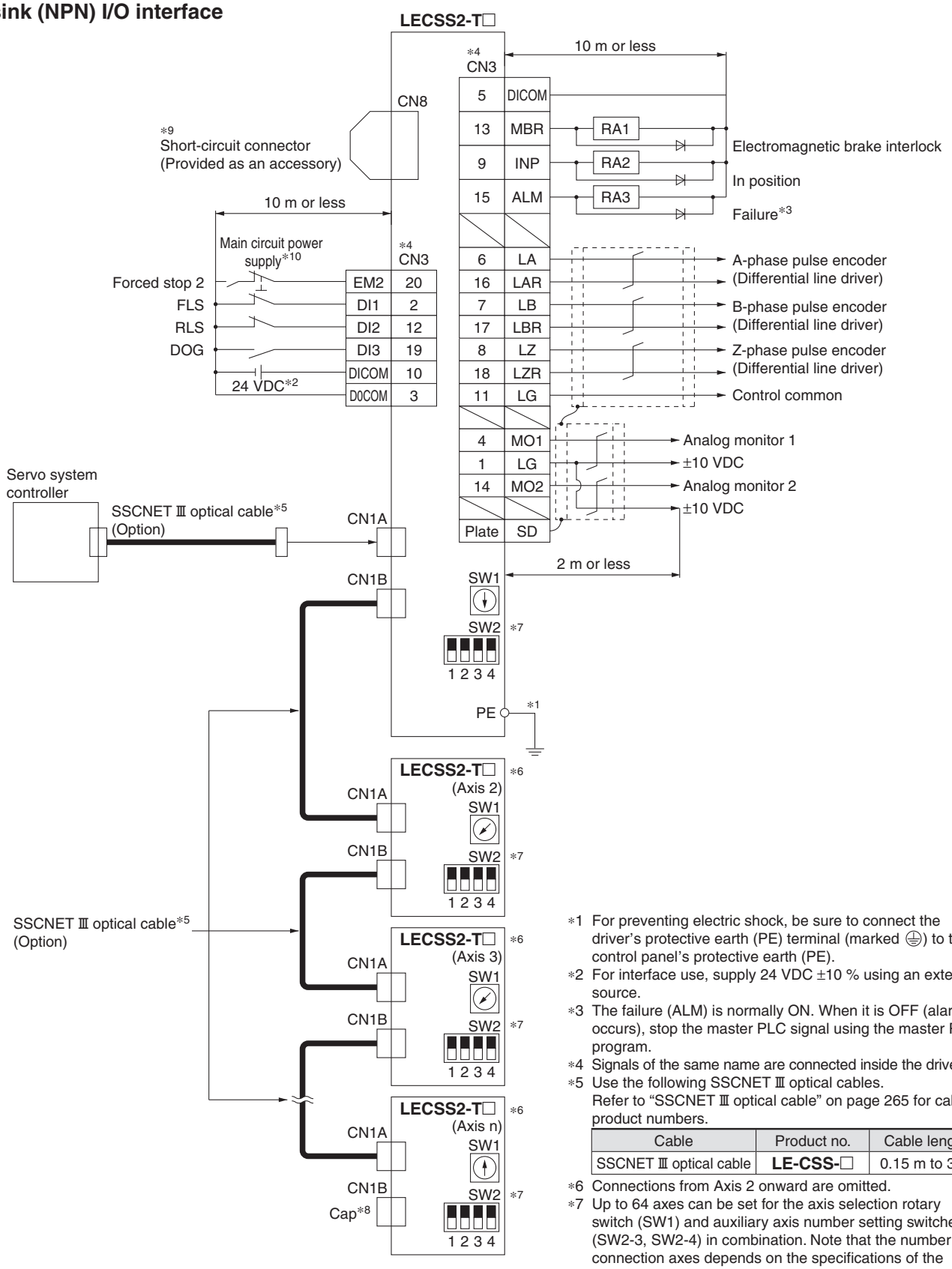

∗1 For preventing electric shock, be sure to connect the driver's protective earth (PE) terminal (marked ⏚) to the control panel's protective earth (PE).

∗2 For interface use, supply 24 VDC ±10 % using an external source.

∗3 The failure (ALM) is normally ON. When it is OFF (alarm occurs), stop the master PLC signal using the master PLC program.

∗4 Signals of the same name are connected inside the driver.

∗5 Use the following SSCNET Ⅲ optical cables. Refer to "SSCNET Ⅲ optical cable" on page 265 for cable product numbers.

Cable	Product no.	Cable length
SSCNET Ⅲ optical cable	**LE-CSS-□**	0.15 m to 3 m

∗6 Connections from Axis 2 onward are omitted.

∗7 Up to 64 axes can be set for the axis selection rotary switch (SW1) and auxiliary axis number setting switches (SW2-3, SW2-4) in combination. Note that the number of connection axes depends on the specifications of the master PLC.

∗8 Be sure to place a cap on unused CN1A/CN1B.

∗9 When not using the STO function, use the driver with the short-circuit connector (provided as an accessory) inserted.

∗10 Configure a circuit to turn off EM2 when the main circuit power is turned off to prevent any unexpected restarts of the driver.

Options

Motor cable, Lock cable, Encoder cable (LECS□, LECSS-T common)

LE − CS M − S 5 A

Motor type

S	AC servo motor

Cable description

M	Motor cable
B	Lock cable
E	Encoder cable

Cable type

S	Standard cable
R	Robotic cable

Cable length (L) [m]

2	2
5	5
A	10

Direction of connector

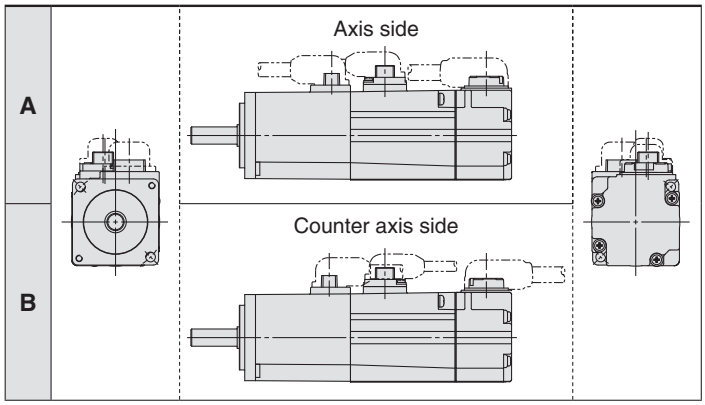

LE-CSM-□□: Motor cable

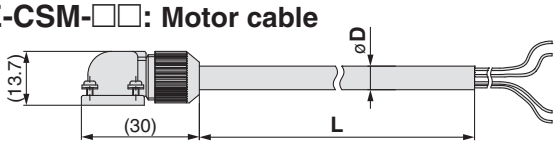

Product no.	Ø D
LE-CSM-S□A	6.2
LE-CSM-S□B	
LE-CSM-R□A	5.7
LE-CSM-R□B	

Weight

Product no.	Length [m]	Weight [g]
LE-CSM-S2□	2	180
LE-CSM-S5□	5	400
LE-CSM-SA□	10	800
LE-CSM-R2□	2	180
LE-CSM-R5□	5	400
LE-CSM-RA□	10	800

LE-CSB-□□: Lock cable*1

Product no.	Ø D
LE-CSB-S□A	4.7
LE-CSB-S□B	
LE-CSB-R□A	4.5
LE-CSB-R□B	

Weight

Product no.	Length [m]	Weight [g]
LE-CSB-S2□	2	80
LE-CSB-S5□	5	200
LE-CSB-SA□	10	400
LE-CSB-R2□	2	80
LE-CSB-R5□	5	200
LE-CSB-RA□	10	400

LE-CSE-□□: Encoder cable

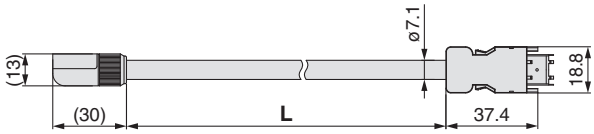

Weight

Product no.	Length [m]	Weight [g]
LE-CSE-S2□	2	220
LE-CSE-S5□	5	600
LE-CSE-SA□	10	1200
LE-CSE-R2□	2	220
LE-CSE-R5□	5	600
LE-CSE-RA□	10	1200

*1 If using an actuator with a lock, a lock cable is required.

I/O connector (Without cable, Connector only)

LE − CSN A

Driver type

A	LECSA□, LECSC□
B	LECSB□
S	LECSS□-S□/LECSS2-T□

LE-CSNA

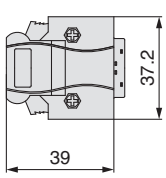

LE-CSNB

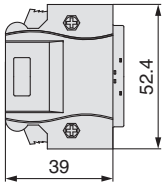

LE-CSNS

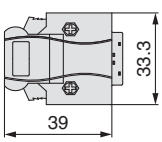

Weight

Product no.	Weight [g]
LE-CSNA	25
LE-CSNB	30
LE-CSNS	16

* LE-CSNA: 10126-3000PE (connector)/10326-52F0-008 (shell kit) manufactured by 3M Japan Limited or equivalent
  LE-CSNB: 10150-3000PE (connector)/10350-52F0-008 (shell kit) manufactured by 3M Japan Limited or equivalent
  LE-CSNS: 10120-3000PE (connector)/10320-52F0-008 (shell kit) manufactured by 3M Japan Limited or equivalent
* Applicable conductor size: AWG24 to 30
* If using the LECSB, emergency stop (EMG) wiring is required in all cases. (The electric actuator will not operate without the wiring.) Prepare an I/O connector or an I/O cable in advance.

Options

SSCNET Ⅲ optical cable (LECSS□-S□, LECSS2-T□)

LE − CSS − 1

Motor type

S	AC servo motor

Cable description

S	SSCNET Ⅲ optical cable

Cable length

L	0.15 m
K	0.3 m
J	0.5 m
1	1 m
3	3 m

∗ LE-CSS-□ is MR-J3BUS□M manufactured by Mitsubishi Electric Corporation.

Weight

Product no.	Length [m]	Weight [g]
LE-CSS-L	0.15	100
LE-CSS-K	0.3	100
LE-CSS-J	0.5	200
LE-CSS-1	1	200
LE-CSS-3	3	200

I/O cable

LEC − CSN A − 1

Driver type

A	For LECSA□, LECSC□
B	For LECSB□
S	For LECSS□-S□/LECSS2-T□

Cable length (L) [m]

1	1.5

Weight

Product no.	Weight [g]
LEC-CSNA	303
LEC-CSNB	472
LEC-CSNS	221

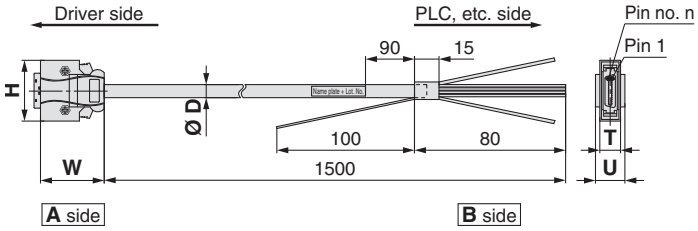

∗ LEC-CSNA-1: 10126-3000PE (connector)/10326-52F0-008 (shell kit) manufactured by 3M Japan Limited or equivalent
LEC-CSNB-1: 10150-3000PE (connector)/10350-52F0-008 (shell kit) manufactured by 3M Japan Limited or equivalent
LEC-CSNS-1: 10120-3000PE (connector)/10320-52F0-008 (shell kit) manufactured by 3M Japan Limited or equivalent
∗ Conductor size: AWG24
∗ If using the LECSB, emergency stop (EMG) wiring is required in all cases. (The electric actuator will not operate without the wiring.) Prepare an I/O connector or an I/O cable in advance.

Cable O.D.

Product no.	Ø D
LEC-CSNA-1	11.1
LEC-CSNB-1	13.8
LEC-CSNS-1	9.1

Dimensions/Pin Nos.

Product no.	W	H	T	U	Pin no. n
LEC-CSNA-1	39	37.2	12.7	14	14
LEC-CSNB-1		52.4		18	26
LEC-CSNS-1		33.3		14	21

Wiring

LEC-CSNA-1: Pin nos. 1 to 26
LEC-CSNB-1: Pin nos. 1 to 50
LEC-CSNS-1: Pin nos. 1 to 20

	Connector pin no.	Pair no. of wire	Insulation colour	Dot mark	Dot colour
A side	1	1	Orange	▬	Red
	2			▬	Black
	3	2	Light gray	▬	Red
	4			▬	Black
	5	3	White	▬	Red
	6			▬	Black
	7	4	Yellow	▬	Red
	8			▬	Black
	9	5	Pink	▬	Red
	10			▬	Black
	11	6	Orange	▬ ▬	Red
	12			▬ ▬	Black
	13	7	Light gray	▬ ▬	Red
	14			▬ ▬	Black
	15	8	White	▬ ▬	Red
	16			▬ ▬	Black
	17	9	Yellow	▬ ▬	Red
	18			▬ ▬	Black

	Connector pin no.	Pair no. of wire	Insulation colour	Dot mark	Dot colour
A side	19	10	Pink	▬ ▬	Red
	20			▬ ▬	Black
	21	11	Orange	▬ ▬ ▬	Red
	22			▬ ▬ ▬	Black
	23	12	Light gray	▬ ▬ ▬	Red
	24			▬ ▬ ▬	Black
	25	13	White	▬ ▬ ▬	Red
	26			▬ ▬ ▬	Black
	27	14	Yellow	▬ ▬ ▬	Red
	28			▬ ▬ ▬	Black
	29	15	Pink	▬ ▬ ▬	Red
	30			▬ ▬ ▬	Black
	31	16	Orange	▬ ▬ ▬ ▬	Red
	32			▬ ▬ ▬ ▬	Black
	33	17	Light gray	▬ ▬ ▬ ▬	Red
	34			▬ ▬ ▬ ▬	Black

	Connector pin no.	Pair no. of wire	Insulation colour	Dot mark	Dot colour
A side	35	18	White	▬ ▬ ▬ ▬	Red
	36			▬ ▬ ▬ ▬	Black
	37	19	Yellow	▬ ▬ ▬ ▬	Red
	38			▬ ▬ ▬ ▬	Black
	39	20	Pink	▬ ▬ ▬ ▬	Red
	40			▬ ▬ ▬ ▬	Black
	41	21	Orange	▬ ▬ ▬ ▬ ▬	Red
	42			▬ ▬ ▬ ▬ ▬	Black
	43	22	Light gray	▬ ▬ ▬ ▬ ▬	Red
	44			▬ ▬ ▬ ▬ ▬	Black
	45	23	White	▬ ▬ ▬ ▬ ▬	Red
	46			▬ ▬ ▬ ▬ ▬	Black
	47	24	Yellow	▬ ▬ ▬ ▬ ▬	Red
	48			▬ ▬ ▬ ▬ ▬	Black
	49	25	Pink	▬ ▬ ▬ ▬ ▬	Red
	50			▬ ▬ ▬ ▬ ▬	Black

Options

Regeneration option (LECS□, LECSS-T common)

LEC − MR − RB − 12

Regeneration option type

032	Allowable regenerative power 30 W
12	Allowable regenerative power 100 W

* Confirm regeneration option to be used in "Model Selection."

LEC-MR-RB-032

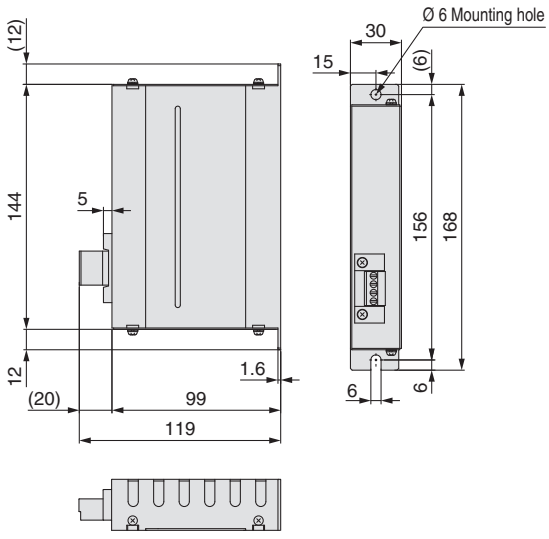

Weight

Product no.	Weight [kg]
LEC-MR-RB-032	0.5

* MR-RB032 manufactured by Mitsubishi Electric Corporation

LEC-MR-RB-12

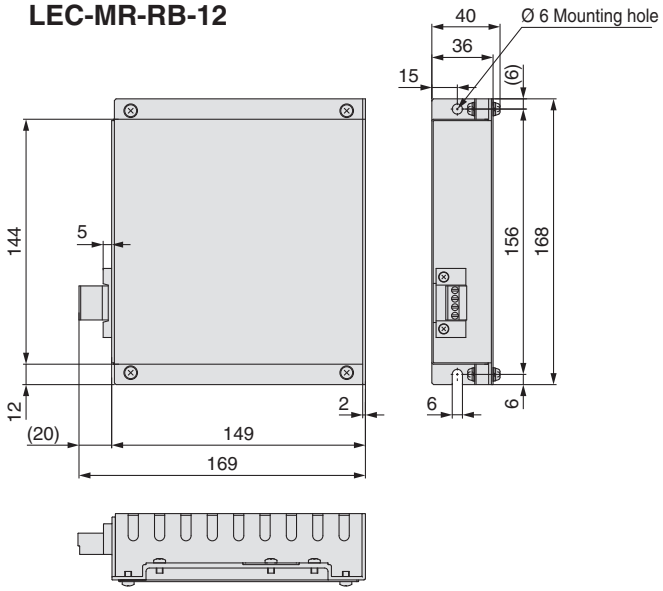

Weight

Product no.	Weight [kg]
LEC-MR-RB-12	1.1

* MR-RB12 manufactured by Mitsubishi Electric Corporation

Options

LECSA LECSB LECSC LECSS LECSS2-T□
Drivers

USB cable

PC

Setup software
(MR Configurator2™)

Setup software (MR Configurator2™) (LECSA, LECSB, LECSC, LECSS, LECSS-T common)

LEC−MRC2□

Display language

—	Japanese version
E	English version
C	Chinese version

∗ SW1DNC-MRC2-□ manufactured by Mitsubishi Electric Corporation
Refer to Mitsubishi Electric Corporation's website for operating environment and version upgrade information.
MR Configurator2™ is a registered trademark or trademark of Mitsubishi Electric Corporation.

Adjustment, waveform display, diagnostics, parameter read/write, and test operation can be performed upon a PC.

Compatible PC

When using setup software (MR Configurator2™), use an IBM PC/AT compatible PC that meets the following operating conditions.

Hardware Requirements

Equipment		Setup software (MR Configurator2™) **LEC-MRC2□**
∗1, 2, 3, 4, 5, 6, 7, 8, 9, 10 PC	OS	Microsoft® Windows® 10 Edition Microsoft® Windows® 10 Enterprise Microsoft® Windows® 10 Pro Microsoft® Windows® 10 Home Microsoft® Windows® 8.1 Enterprise Microsoft® Windows® 8.1 Pro Microsoft® Windows® 8.1 Microsoft® Windows® 8 Enterprise Microsoft® Windows® 8 Pro Microsoft® Windows® 8 Microsoft® Windows® 7 Ultimate Microsoft® Windows® 7 Enterprise Microsoft® Windows® 7 Professional Microsoft® Windows® 7 Home Premium Microsoft® Windows® 7 Starter Microsoft® Windows Vista® Ultimate Microsoft® Windows Vista® Enterprise Microsoft® Windows Vista® Business Microsoft® Windows Vista® Home Premium Microsoft® Windows Vista® Home Basic Microsoft® Windows® XP Professional, Service Pack 3 or later Microsoft® Windows® XP Home Edition, Service Pack 3 or later
	Hard disk	1 GB or more of free space
	Communication interface	Use USB port.
Display		Resolution 1024 x 768 or more Must be capable of high colour (16-bit) display. Connectable with the PC above
Keyboard		Connectable with the PC above
Mouse		Connectable with the PC above
Printer		Connectable with the PC above
USB cable∗11		LEC-MR-J3USB

∗1 Before using a PC for setting LECSA point table method/program operation method, upgrade to version 1.18U (Japanese version)/ version 1.19V (English version) or later. Refer to Mitsubishi Electric Corporation's website for version upgrade information.
∗2 Windows® and Windows Vista® are registered trademarks of Microsoft Corporation in the United States and other countries.
∗3 On some PCs, setup software (MR Configurator2™) may not run properly.
∗4 The following functions cannot be used. If any of the following functions is used, this product may not operate normally.
· Start of application in Windows® compatible mode
· Fast User Switching
· Remote Desktop
· Windows XP Mode
· Windows Touch or Touch
· Modern UI
· Client Hyper-V
· Tablet Mode
· Virtual desktop
· 64-bit OSs are not supported, except for Microsoft® Windows®7 or later.
∗5 Multi-display is set, the screen of this product may not operate normally.
∗6 The size of the text or other items on the screen is not changed to the specified value (96 DPI, 100 %, 9 pt, etc.), the screen of this product may not operate normally.
∗7 Changed the resolution of the screen during operating, the screen of this product may not operate normally.
∗8 Please use by "Standard User," "Administrator" in Windows Vista® or later.
∗9 Using a PC for setting Windows® 10, upgrade to version 1.52E or later.
Using a PC for setting Windows®8.1, upgrade to version 1.25B or later.
Using a PC for setting Windows®8, upgrade to version 1.20W or later.
Refer to Mitsubishi Electric Corporation's website for version upgrade information.
∗10 If .NET Framework 3.5 (including .NET 2.0 and 3.0) have been disabled in Windows® 7 or later, it is necessary to enable it.
∗11 Order USB cable separately.
· This cable is compatible with the setup software (MR Configurator™: LEC-MR-SETUP221□).

Setup Software Compatible Drivers

Compatible driver	Setup software	
	MR Configurator™	MR Configurator2™
	LEC-MR-SETUP221□	LEC-MRC2□
LECSA	○	○
LECSB	○	○
LECSC	○	○
LECSS□-S□	○	○
LECSS2-T□	—	○

Options

USB cable (3 m)
(LECSA, LECSB, LECSC, LECSS, LECSS-T common)

LEC−MR−J3USB

* MR-J3USBCBL3M manufactured by Mitsubishi Electric Corporation

Weight: 140 g

Cable for connecting PC and driver when using the setup software (MR Configurator2™)
Do not use any cable other than this cable.

Battery (Only for LECSB, LECSC, and LECSS)

LEC−MR−J3BAT

* MR-J3BAT manufactured by Mitsubishi Electric Corporation

Battery for replacement
Absolute position data is maintained by installing the battery to the driver.

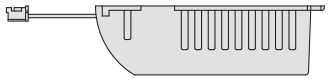

Weight: 30 g

* The LEC-MR-J 3 BAT is a single battery that uses lithium metal battery ER6V.
When transporting lithium metal batteries and devices with built-in lithium metal batteries by a method subject to UN regulations, it is necessary to apply measures according to the regulations stipulated in the United Nations Recommendations on the Transport of Dangerous Goods, the Technical Instructions (ICAO-TI) of the International Civil Aviation Organisation (ICAO), and the International Maritime Dangerous Goods Code (IMDG CODE) of the International Maritime Organisation (IMO). If a customer is transporting products such as shown above, it is necessary to confirm the latest regulations, or the laws and regulations of the country of transport on your own, in order to apply the proper measures. Please contact SMC sales representative for details.

Battery (Only for LECSS2-T□)

LEC−MR−BAT6V1SET

* MR-BAT6V1SET manufactured by Mitsubishi Electric Corporation

Battery for replacement
Absolute position data is maintained by installing the battery to the driver.

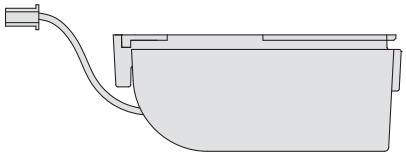

Weight: 60 g

* The LEC-MR-BAT6V1SET is an assembled battery that uses lithium metal battery 2CR17335A.
When transporting lithium metal batteries and devices with built-in lithium metal batteries by a method subject to UN regulations, it is necessary to apply measures according to the regulations stipulated in the United Nations Recommendations on the Transport of Dangerous Goods, the Technical Instructions (ICAO-TI) of the International Civil Aviation Organisation (ICAO), and the International Maritime Dangerous Goods Code (IMDG CODE) of the International Maritime Organisation (IMO). If a customer is transporting products such as shown above, it is necessary to confirm the latest regulations, or the laws and regulations of the country of transport on your own, in order to apply the proper measures. Please contact SMC sales representative for details.

STO cable (3 m) (Only for LECSS2-T□)

LEC−MR−D05UDL3M

* MR-D05UDL3M manufactured by Mitsubishi Electric Corporation

Cable for connecting the driver and device, when using the safety function
Do not use any cable other than this cable.

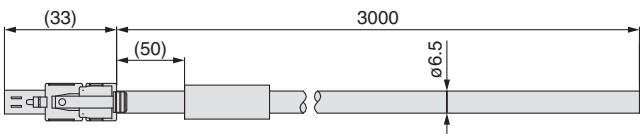

Weight: 500 g

LECS□ Series
Specific Product Precautions 1

Be sure to read this before handling the products. Refer to the back cover for safety instructions. For electric actuator and auto switch precautions, refer to the "Handling Precautions for SMC Products" and the "Operation Manual" on the SMC website: https://www.smc.eu

Design / Selection

⚠Warning

1. Be sure to apply the specified voltage.
Otherwise, malfunction or breakage may occur. If the applied voltage is lower than the specified voltage, it is possible that the load will not be able to be moved due to an internal voltage drop of the driver. Please check the operating voltage before use.

2. Do not operate the product beyond the specifications.
Otherwise, a fire, malfunction, or actuator damage may result. Please check the specifications before use.

3. Install an emergency stop circuit.
Please install an emergency stop outside of the enclosure so that the system operation can be stopped immediately and the power supply can be intercepted.

4. In order to prevent any damage caused by the breakdown or malfunction of the driver and its peripheral devices, a backup system should be established in advance by giving a multiple-layered structure or a fail-safe design to the equipment, etc.

5. If a danger of human injury is expected due to abnormal heat generation, smoking, ignition, etc., of the driver and its peripheral devices, cut off the power supply of the product and the system immediately.

6. The parameters of the driver are set to initial values. Please change the parameters according to the specifications of the customer's equipment before use. Refer to the operation manual for parameter details.

Handling

⚠Warning

1. Do not touch the inside of the driver and its peripheral devices.
Doing so may cause an electric shock or damage to the driver.

2. Do not perform the operation or setting of the product with wet hands.
Doing so may cause an electric shock.

3. Products with damage or those missing any components should not be used.
An electric shock, fire, or injury may result.

4. Use only the specified combination between the electric actuator and driver.
Failure to do so may cause damage to the actuator or the driver.

5. Be careful not to be hit by workpieces while the actuator is moving.
It may cause an injury.

6. Do not connect the power supply or power on the product before confirming the area to which the workpiece moves is safe.
The movement of the workpiece may cause an accident.

7. Do not touch the product when it is energised and for some time after power has been disconnected, as it is very hot.
Doing so may lead to a burn due to the high temperature.

8. Before installation, wiring, and maintenance, the voltage should be checked with a tester 5 minutes after the power supply has been turned off.
Otherwise, an electric shock, fire, or injury may result.

Handling

⚠Warning

9. Static electricity may cause malfunction or break the driver. Do not touch the driver while power is supplied.
When touching the driver for maintenance, take sufficient measures to eliminate static electricity.

10. Do not use the product in an area where dust, powder dust, water, chemicals, or oil is in the air.
It will cause failure or malfunction.

11. Do not use the product in an area where a magnetic field is generated.
It will cause failure or malfunction.

12. Do not install the product in an environment containing flammable gas, explosive gas, or corrosive gas.
It could lead to fire, explosion, or corrosion.

13. Radiant heat from strong heat sources, such as a furnace, direct sunlight, etc., should not be applied to the product.
It will cause failure of the driver or its peripheral devices.

14. Do not use the product in an environment subject to a temperature cycle.
It will cause failure of the driver or its peripheral devices.

15. Do not use the product in a place where surges are generated.
When there are units that generate a large amount of surge around the product (e.g. solenoid type lifters, high-frequency induction furnaces, motors, etc.), this may cause deterioration or damage to the product's internal circuit. Avoid sources of surge generation and crossed lines.

16. Do not install the product in an environment under the effect of vibrations and impacts.
It will cause failure or malfunction.

17. When a surge-generating load, such as a relay or solenoid valve, is driven directly, use a product that incorporates a surge absorption element.

Installation

⚠Warning

1. Install the driver and its peripheral devices on a fireproof material.
Direct installation on or near a flammable material may cause a fire.

2. Do not install the product in a place subject to vibrations and impacts.
It will cause failure or malfunction.

3. The driver should be mounted on a vertical wall in a vertical direction. Also, be sure not to cover the driver's suction/exhaust ports.

4. Install the driver and its peripheral devices on a flat surface.
If the mounting surface is distorted or uneven, an unacceptable force may be added to the housing, etc., causing problems.

Specific Product Precautions 2

Be sure to read this before handling the products. Refer to the back cover for safety instructions. For electric actuator and auto switch precautions, refer to the "Handling Precautions for SMC Products" and the "Operation Manual" on the SMC website: https://www.smc.eu

Power Supply

⚠Caution

1. Use a power supply that has low noise between lines and between the power and ground.
In cases where noise is high, an isolation transformer should be used.

2. To prevent lightning surges, appropriate measures should be taken. Ground the surge absorber for lightning separately from the grounding of the driver and its peripheral devices.

Wiring

⚠Warning

1. The driver will be damaged if a commercial power supply (100/200 V) is added to the driver's servo motor power (U, V, and W). Be sure to check wiring for mistakes when the power supply is turned on.

2. Connect the ends of the U, V, and W wires of the motor cable correctly to the phases (U, V, and W) of the servo motor power. If these wires do not match up, the servo motor cannot be controlled.

Grounding

⚠Warning

1. For grounding the actuator, connect the copper wire of the actuator to the driver's protective earth (PE) terminal and connect the copper wire of the driver to the earth via the control panel's protective earth (PE) terminal.
Do not connect them directly to the control panel's protective earth (PE) terminal.

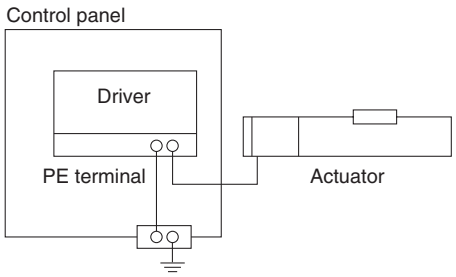

2. In the unlikely event that a malfunction is caused by the ground, please disconnect it.

Maintenance

⚠Warning

1. Perform a maintenance and inspection periodically.
Confirm wiring and screws are not loose.
Loose screws or wires may cause unintentional malfunction.

2. Conduct an appropriate functional inspection after completing the maintenance and inspection.
At times where the equipment or machinery does not operate properly, conduct an emergency stop of the system. Otherwise, an unexpected malfunction may occur and it will become impossible to ensure safety. Conduct a test of the emergency stop in order to confirm the safety of the equipment.

3. Do not disassemble, modify, or repair the driver and its peripheral devices.

4. Do not put anything conductive or flammable inside the driver.
It may cause a fire.

5. Do not conduct an insulation resistance test or withstand voltage test on this product.

6. Ensure sufficient space for maintenance activities.
Design the system allowing the required space for maintenance and inspection.

MECHATROLINK Compatible

AC Servo Motor Driver
Absolute Type
LECYM/LECYU Series

(MECHATROLINK-Ⅱ Type) (MECHATROLINK-Ⅲ Type)

LECYM LECYU

CE RoHS

How to Order

Driver **LECY M 2 −** ☐

Driver type

M	MECHATROLINK-Ⅱ type (For absolute encoder)
U	MECHATROLINK-Ⅲ type (For absolute encoder)

Power supply voltage

2	200 to 230 VAC, 50/60 Hz

∗ **If an I/O connector (CN1) is required, order the part number "LE-CYNA" separately.**
∗ **If an I/O cable (CN1) is required, order the part number "LEC-CSNA-1" separately.**

Compatible motor type

Symbol	Type	Capacity	Encoder
V5	AC servo motor (V6∗1)	100 W	Absolute
V7	AC servo motor (V7∗1)	200 W	
V8	AC servo motor (V8∗1)	400 W	

∗1 The symbol shows the motor type (actuator).

Dimensions

MECHATROLINK-Ⅱ type

LECYM2-V☐

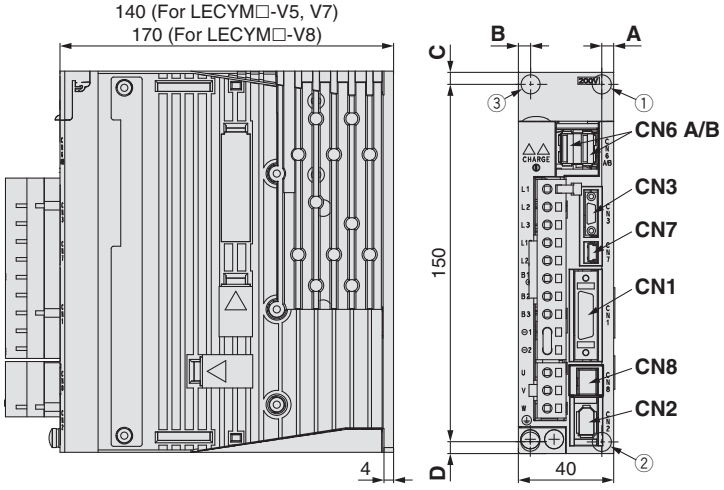

Connector name	Description
CN1	I/O signal connector
CN2	Encoder connector
CN3∗1	Digital operator connector
CN6A	MECHATROLINK-Ⅱ communication connector
CN6B	MECHATROLINK-Ⅱ communication connector
CN7	PC connector
CN8	Safety connector

∗1 Digital operator is JUSP-OP05A-1-E manufactured by YASKAWA Electric Corporation. When using the digital operator, it should be provided by the customer.

Motor capacity	Hole position	Mounting dimensions A	B	C	D	Mounting hole
V5 (100 W)	①②	5	—	5	5	Ø 5
V7 (200 W)	①②	5	—	5	5	
V8 (400 W)	②③	5	5	5	5	

∗ The mounting hole position varies depending on the motor capacity.

MECHATROLINK-Ⅲ type

LECYU2-V☐

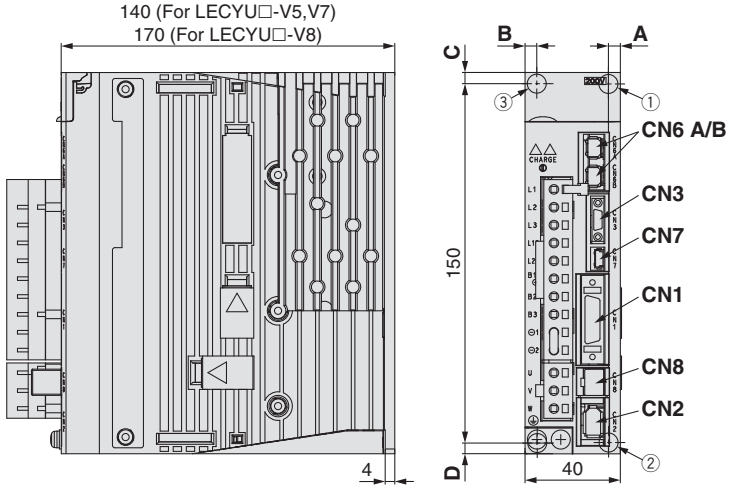

Connector name	Description
CN1	I/O signal connector
CN2	Encoder connector
CN3∗1	Digital operator connector
CN6A	MECHATROLINK-Ⅲ communication connector
CN6B	MECHATROLINK-Ⅲ communication connector
CN7	PC connector
CN8	Safety connector

∗1 Digital operator is JUSP-OP05A-1-E manufactured by YASKAWA Electric Corporation. When using the digital operator, it should be provided by the customer.

Motor capacity	Hole position	Mounting dimensions A	B	C	D	Mounting hole
V5 (100 W)	①②	5	—	5	5	Ø 5
V7 (200 W)	①②	5	—	5	5	
V8 (400 W)	②③	5	5	5	5	

∗ The mounting hole position varies depending on the motor capacity.

SMC

Specifications

MECHATROLINK-Ⅱ Type

Model			LECYM2-V5	LECYM2-V7	LECYM2-V8
Compatible motor capacity [W]			100	200	400
Compatible encoder			Absolute 20-bit encoder (Resolution: 1048576 p/rev)		
Main circuit power supply	Power voltage [V]		Three phase 200 to 230 VAC (50/60 Hz)		
	Allowable voltage fluctuation [V]		Three phase 170 to 253 VAC		
Control power supply	Power voltage [V]		Single phase 200 to 230 VAC (50/60 Hz)		
	Allowable voltage fluctuation [V]		Single phase 170 to 253 VAC		
Power supply capacity (at rated output) [A]			0.91	1.6	2.8
Input circuit			NPN (Sink circuit)/PNP (Source circuit)		
Parallel input (7 inputs)	Number of optional allocations	7 inputs	[Initial allocation] · Homing deceleration switch (/DEC) · External latch (/EXT 1 to 3) · Forward run prohibited (P-OT), reverse run prohibited (N-OT) [Can be allocated by setting the parameters] · Forward external torque limit (/P-CL), reverse external torque limit (/N-CL) Signal allocations can be performed, and positive and negative logic can be changed.		
Parallel output (4 outputs)	Number of fixed allocations	1 output	· Servo alarm (ALM)		
	Number of optional allocations	3 outputs	[Initial allocation] · Lock (/BK) [Can be allocated by setting the parameters] · Positioning completion (/COIN) · Speed limit detection (/VLT) · Speed coincidence detection (/V-CMP) · Rotation detection (/TGON) · Warning (/WARN) · Servo ready (/S-RDY) · Near (/NEAR) · Torque limit detection (/CLT) Signal allocations can be performed, and positive and negative logic can be changed.		
MECHATROLINK communication	Communication protocol		MECHATROLINK-Ⅱ		
	Station address		41H to 5FH		
	Transmission speed		10 Mbps		
	Transmission cycle		250 μs, 0.5 ms to 4 ms (Multiples of 0.5 ms)		
	Number of transmission bytes		17 bytes, 32 bytes		
	Max. number of stations		30		
	Cable length		Overall cable length: 50 m or less, Cable length between the stations: 0.5 m or more		
Command method	Control method		Position, speed, or torque control with MECHATROLINK-Ⅱ communication		
	Command input		MECHATROLINK-Ⅱ command (Motion, data setting, monitoring, or adjustment)		
Function	Gain adjustment		Tuning-less/Advanced auto tuning/One-parameter tuning		
	Communication setting		USB communication, RS-422 communication		
	Torque limit		Internal torque limit, external torque limit, and torque limit by analogue command		
	Encoder output		Phase A, B, Z: Line driver output		
	Emergency stop		CN8 Safety function		
	Overtravel		Dynamic brake stop, deceleration to a stop, or free run to a stop at P-OT or N-OT		
	Alarm		Alarm signal, MECHATROLINK-Ⅱ command		
Operating temperature range [°C]			0 to 55 (No freezing)		
Operating humidity range [%RH]			90 or less (No condensation)		
Storage temperature range [°C]			–20 to 85 (No freezing)		
Storage humidity range [%RH]			90 or less (No condensation)		
Insulation resistance [MΩ]			10 MΩ (500 VDC)		
Weight [g]			900		1000

Specifications

MECHATROLINK-Ⅲ Type

Model			LECYU2-V5	LECYU2-V7	LECYU2-V8
Compatible motor capacity [W]			100	200	400
Compatible encoder			Absolute 20-bit encoder (Resolution: 1048576 p/rev)		
Main circuit power supply	Power voltage [V]		Three phase 200 to 230 VAC (50/60 Hz)		
	Allowable voltage fluctuation [V]		Three phase 170 to 253 VAC		
Control power supply	Power voltage [V]		Single phase 200 to 230 VAC (50/60 Hz)		
	Allowable voltage fluctuation [V]		Single phase 170 to 253 VAC		
Power supply capacity (at rated output) [A]			0.91	1.6	2.8
Input circuit			NPN (Sink circuit)/PNP (Source circuit)		
Parallel input (7 inputs)	Number of optional allocations	7 inputs	[Initial allocation] · Homing deceleration switch (/DEC) · External latch (/EXT 1 to 3) · Forward run prohibited (P-OT), reverse run prohibited (N-OT) [Can be allocated by setting the parameters] · Forward external torque limit (/P-CL), reverse external torque limit (/N-CL) Signal allocations can be performed, and positive and negative logic can be changed.		
Parallel output (4 outputs)	Number of fixed allocations	1 output	· Servo alarm (ALM)		
	Number of optional allocations	3 outputs	[Initial allocation] · Lock (/BK) [Can be allocated by setting the parameters] · Positioning completion (/COIN) · Speed limit detection (/VLT) · Speed coincidence detection (/V-CMP) · Rotation detection (/TGON) · Warning (/WARN) · Servo ready (/S-RDY) · Near (/NEAR) · Torque limit detection (/CLT) Signal allocations can be performed, and positive and negative logic can be changed.		
MECHATROLINK communication	Communication protocol		MECHATROLINK-Ⅲ		
	Station address		03H to EFH		
	Transmission speed		100 Mbps		
	Transmission cycle		125 μs, 250 μs, 500 μs, 750 μs, 1 ms to 4 ms (Multiples of 0.5 ms)		
	Number of transmission bytes		16 bytes, 32 bytes, 48 bytes		
	Max. number of stations		62		
	Cable length		Cable length between the stations: 0.5 m or more, 75 m or less		
Command method	Control method		Position, speed, or torque control with MECHATROLINK-Ⅲ communication		
	Command input		MECHATROLINK-Ⅲ command (Motion, data setting, monitoring, or adjustment)		
Function	Gain adjustment		Tuning-less/Advanced auto tuning/One-parameter tuning		
	Communication setting		USB communication, RS-422 communication		
	Torque limit		Internal torque limit, external torque limit, and torque limit by analogue command		
	Encoder output		Phase A, B, Z: Line driver output		
	Emergency stop		CN8 Safety function		
	Overtravel		Dynamic brake stop, deceleration to a stop, or free run to a stop at P-OT or N-OT		
	Alarm		Alarm signal, MECHATROLINK-Ⅲ command		
Operating temperature range [°C]			0 to 55 (No freezing)		
Operating humidity range [%RH]			90 or less (No condensation)		
Storage temperature range [°C]			–20 to 85 (No freezing)		
Storage humidity range [%RH]			90 or less (No condensation)		
Insulation resistance [MΩ]			10 MΩ (500 VDC)		
Weight [g]			900		1000

Power Supply Wiring Example: LECY□

■Three phase 200 V LECYM2-□ LECYU2-□

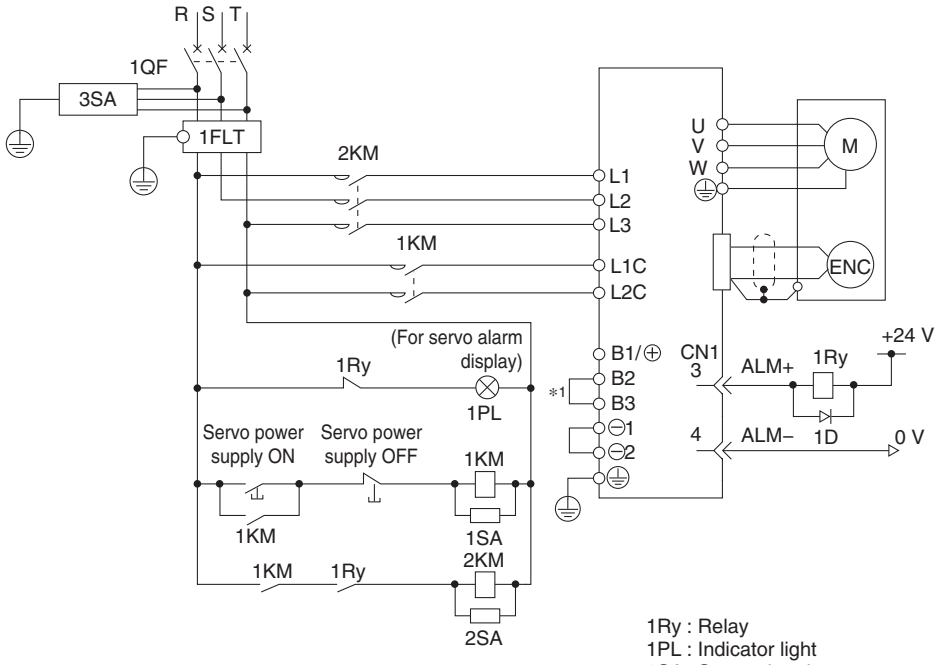

1QF : Molded-case circuit breaker
1FLT: Noise filter
1KM : Magnetic contactor (for control power supply)
2KM : Magnetic contactor (for main circuit power supply)

1Ry : Relay
1PL : Indicator light
1SA : Surge absorber
2SA : Surge absorber
3SA : Surge absorber
1D : Flywheel diode

*1 For the LECY□2-V5, LECY□2-V7 and LECY□2-V8, terminals B2 and B3 are not short-circuited. Do not short-circuit these terminals.

Main Circuit Power Supply Connector * Accessory

Terminal name	Function	Details
L1	Main circuit power supply	Connect the main circuit power supply. Single phase 200 to 230 VAC, 50/60 Hz Connection terminal: L1, L2 Three phase 200 to 230 VAC, 50/60 Hz Connection terminal: L1, L2, L3
L2		
L3		
L1C	Control power supply	Connect the control power supply. Single phase 200 to 230 VAC, 50/60 Hz Connection terminal: L1C, L2C
L2C		
B1/⊕	External regenerative resistor connection terminal	When the regenerative resistor is required, connect it between terminals B1⊕ and B2.
B2		
B3		
⊖1	Main circuit negative terminal	⊖1 and ⊖2 are connected at shipment.
⊖2		

Motor Connector * Accessory

Terminal name	Function	Details
U	Servo motor power (U)	Connect to motor cable (U, V, W).
V	Servo motor power (V)	
W	Servo motor power (W)	

Power Supply Wire Specifications

Item	Specifications
Applicable wire size	L1, L2, L3, L1C, L2C Single wire, Twisted wire, AWG14 (2.0 mm^2)
Stripped wire length	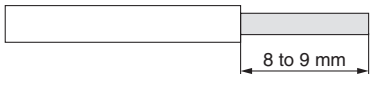

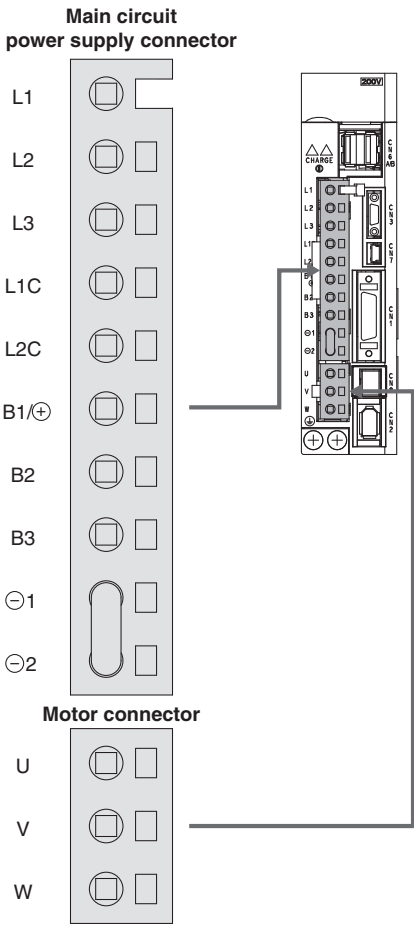

Control Signal Wiring Example: LECYM

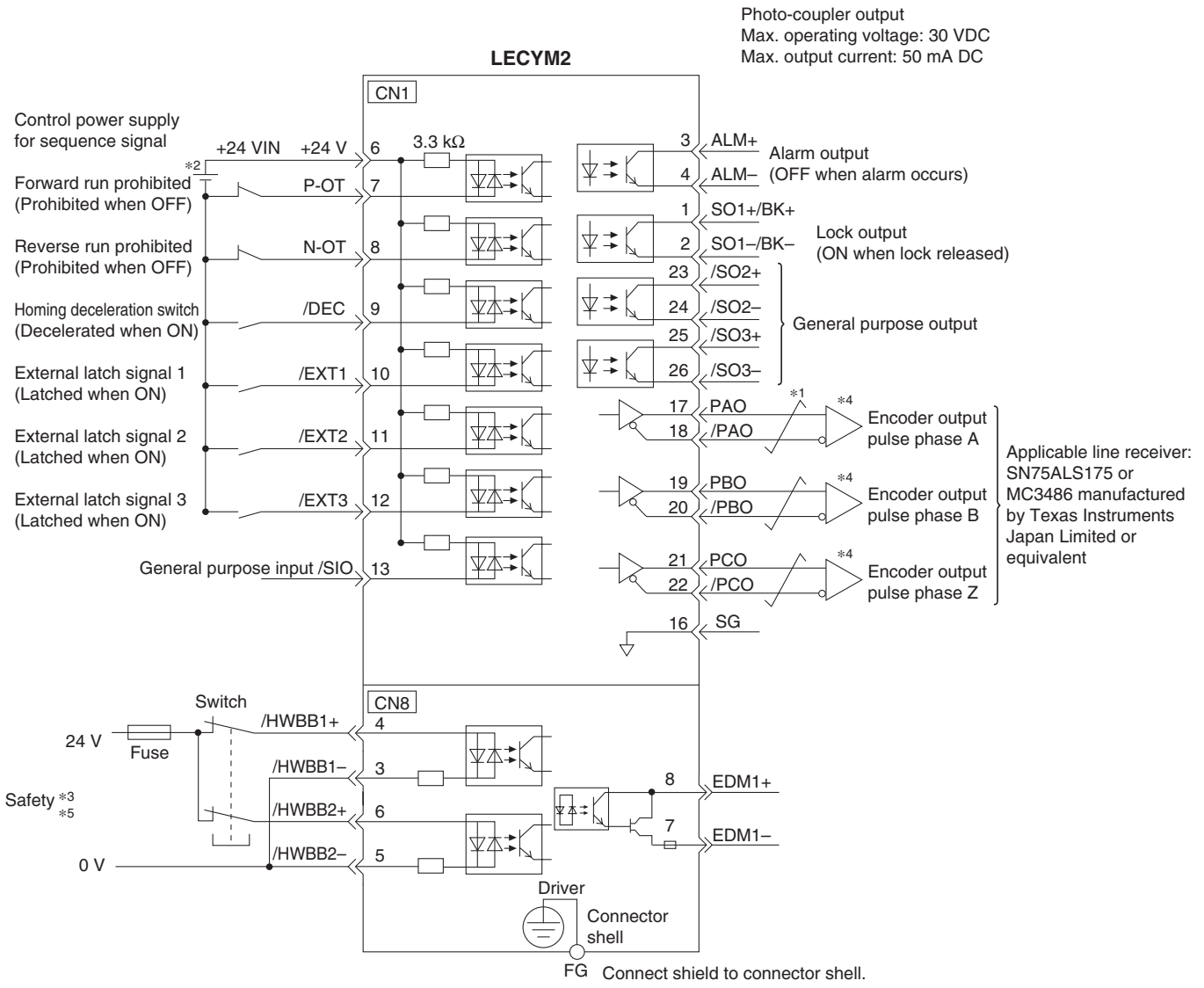

*1 ⫽ shows twisted-pair wires.
*2 The 24 VDC power supply is not included. Use a 24 VDC power supply with double insulation or reinforced insulation.
*3 When using the safety function, a safety function device must be connected to the wiring that is necessary to activate the safety function. Otherwise, the servo motor is not turned ON. When not using the safety function, use the driver with the Safety Jumper Connector (provided as an accessory) inserted into the CN8.
*4 Always use line receivers to receive the output signals.
** The functions allocated to the input signals /DEC, P-OT, N-OT, /EXT 1 , /EXT 2 and /EXT 3 , and the output signals /SO 1 , /SO 2 and /SO 3 can be changed by setting the parameters.
*5 It is a safety function equivalent to the STO function (IEC 61800-5-2) using the hard wire base block function (HWBB).

Control Signal Wiring Example: LECYU

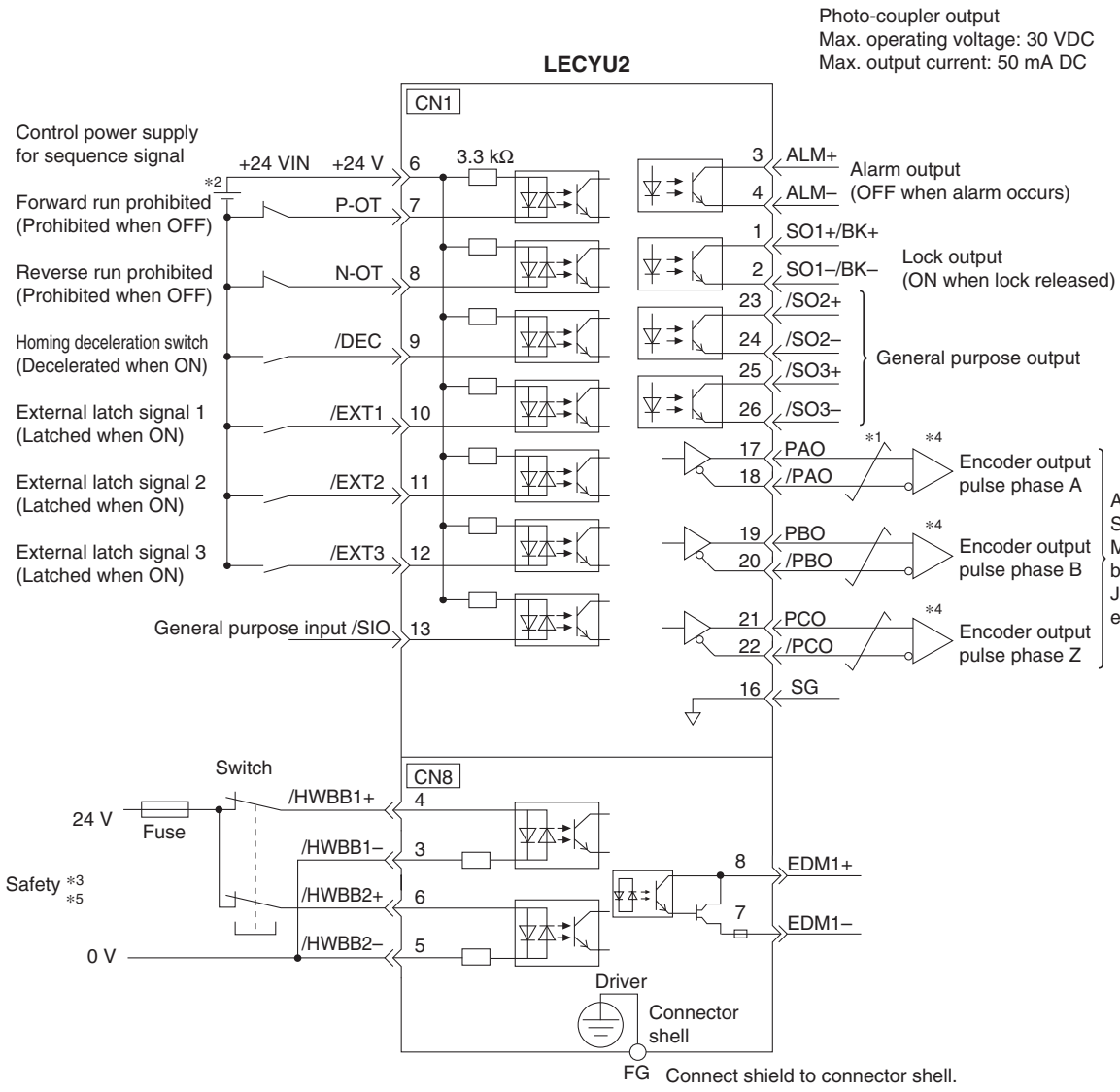

*1 ⫽ shows twisted-pair wires.
*2 The 24 VDC power supply is not included. Use a 24 VDC power supply with double insulation or reinforced insulation.
*3 When using the safety function, a safety function device must be connected to the wiring that is necessary to activate the safety function. Otherwise, the servo motor is not turned ON. When not using the safety function, use the driver with the Safety Jumper Connector (provided as an accessory) inserted into the CN8.
*4 Always use line receivers to receive the output signals.
** The functions allocated to the input signals /DEC, P-OT, N-OT, /EXT 1 , /EXT 2 and /EXT 3 , and the output signals /SO 1 , /SO 2 and /SO 3 can be changed by setting the parameters.
*5 It is a safety function equivalent to the STO function (IEC 61800-5-2) using the hard wire base block function (HWBB).

Options

Motor cable, Motor cable for lock option, Encoder cable (LECYM/LECYU common)

LE − CY M − S 5 A − 5

Motor type

Y	AC servo motor

Motor capacity

5	100 W
7	200/400 W

∗ For encoder cable, the suffix "–□" (Motor capacity) is not necessary.

Cable description

M	Motor cable
B	Motor cable for lock option
E	Encoder cable (With battery case)

Cable type

S	Standard cable
R	Robotic cable

Direction of connector

A	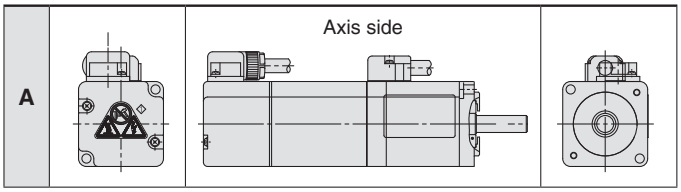

∗ The cable entry direction is axis side only.

Cable length (L) [m]

3	3
5	5
A	10
C	20

LE-CYM-□□A-□: Motor cable

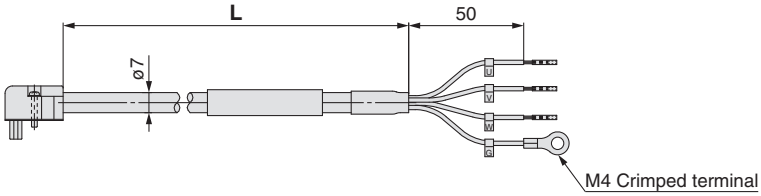

Weight

Product no.	Length [m]	Weight [g]	Note
LE-CYM-S3A-5	3	250	100 W
LE-CYM-S5A-5	5	390	
LE-CYM-SAA-5	10	750	
LE-CYM-SCA-5	20	1500	
LE-CYM-S3A-7	3	250	200/ 400 W
LE-CYM-S5A-7	5	390	
LE-CYM-SAA-7	10	750	
LE-CYM-SCA-7	20	1500	
LE-CYM-R3A-5	3	220	100 W
LE-CYM-R5A-5	5	350	
LE-CYM-RAA-5	10	670	
LE-CYM-RCA-5	20	1300	
LE-CYM-R3A-7	3	220	200/ 400 W
LE-CYM-R5A-7	5	350	
LE-CYM-RAA-7	10	670	
LE-CYM-RCA-7	20	1300	

LE-CYB-□□A-□: Motor cable for lock option

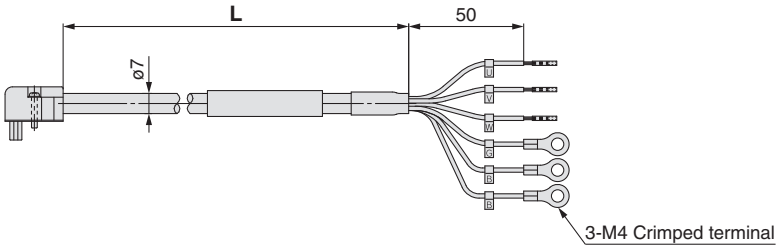

Weight

Product no.	Length [m]	Weight [g]	Note
LE-CYB-S3A-5	3	240	100 W
LE-CYB-S5A-5	5	390	
LE-CYB-SAA-5	10	750	
LE-CYB-SCA-5	20	1490	
LE-CYB-S3A-7	3	240	200/ 400 W
LE-CYB-S5A-7	5	390	
LE-CYB-SAA-7	10	750	
LE-CYB-SCA-7	20	1490	
LE-CYB-R3A-5	3	220	100 W
LE-CYB-R5A-5	5	350	
LE-CYB-RAA-5	10	670	
LE-CYB-RCA-5	20	1300	
LE-CYB-R3A-7	3	220	200/ 400 W
LE-CYB-R5A-7	5	350	
LE-CYB-RAA-7	10	670	
LE-CYB-RCA-7	20	1300	

LE-CYE-□□A: Encoder cable

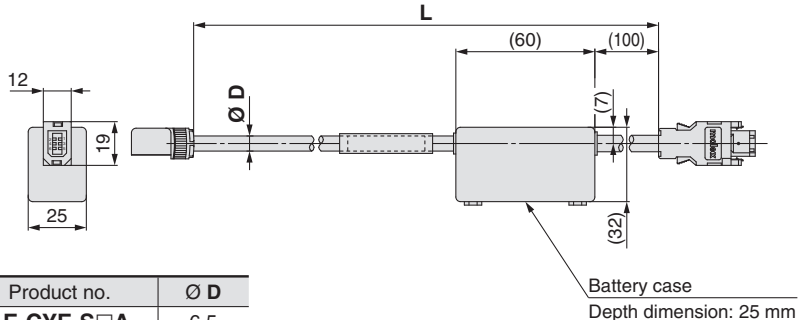

Product no.	Ø D
LE-CYE-S□A	6.5
LE-CYE-R□A	6.8

Weight

Product no.	Length [m]	Weight [g]
LE-CYE-S3A	3	230
LE-CYE-S5A	5	360
LE-CYE-SAA	10	680
LE-CYE-SCA	20	1250
LE-CYE-R3A	3	220
LE-CYE-R5A	5	330
LE-CYE-RAA	10	660
LE-CYE-RCA	20	1240

∗ LE-CYM-S□A-□ is JZSP-CSM0□-□□-E manufactured by YASKAWA CONTROLS CO., LTD.
LE-CYB-S□A-□ is JZSP-CSM1□-□□-E manufactured by YASKAWA CONTROLS CO., LTD.
LE-CYE-S□A is JZSP-CSP05-□□-E manufactured by YASKAWA CONTROLS CO., LTD.
LE-CYM-R□A-□ is JZSP-CSM2□-□□-E manufactured by YASKAWA CONTROLS CO., LTD.
LE-CYB-R□A-□ is JZSP-CSM3□-□□-E manufactured by YASKAWA CONTROLS CO., LTD.
LE-CYE-R□A is JZSP-CSP25-□□-E manufactured by YASKAWA CONTROLS CO., LTD.

Options

I/O connector (Without cable, Connector only)

LE − CYN A

Driver type

A	**For LECYM2, LECYU2**

LE-CYNA

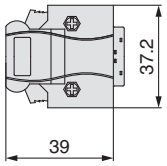

* LE-CYNA: 10126-3000PE (connector)/10326-52F0-008 (shell kit) manufactured by 3M Japan Limited or equivalent
* Conductor size: AWG24 to 30

I/O cable

LEC − CSN A − 1

Driver type

A	**For LECYM2, LECYU2**

Cable length (L) [m]

1	1.5

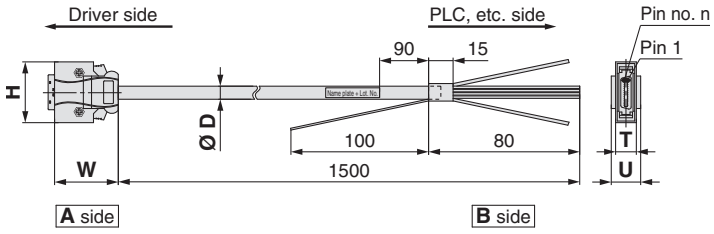

* LEC-CSNA-1: 10126-3000PE (connector)/10326-52F0-008 (shell kit) manufactured by 3M Japan Limited or equivalent
* Conductor size: AWG24

Wiring

LEC-CSNA-1: Pin nos. 1 to 26

	Connector pin no.	Pair no. of wire	Insulation colour	Dot mark	Dot colour
A side	1	1	Orange	▬	Red
	2			▬	Black
	3	2	Light gray	▬	Red
	4			▬	Black
	5	3	White	▬	Red
	6			▬	Black
	7	4	Yellow	▬	Red
	8			▬	Black
	9	5	Pink	▬	Red
	10			▬	Black

	Connector pin no.	Pair no. of wire	Insulation colour	Dot mark	Dot colour
A side	11	6	Orange	▬ ▬	Red
	12			▬ ▬	Black
	13	7	Light gray	▬ ▬	Red
	14			▬ ▬	Black
	15	8	White	▬ ▬	Red
	16			▬ ▬	Black
	17	9	Yellow	▬ ▬	Red
	18			▬ ▬	Black
	19	10	Pink	▬ ▬	Red
	20			▬ ▬	Black

	Connector pin no.	Pair no. of wire	Insulation colour	Dot mark	Dot colour
A side	21	11	Orange	▬ ▬ ▬	Red
	22			▬ ▬ ▬	Black
	23	12	Light gray	▬ ▬ ▬	Red
	24			▬ ▬ ▬	Black
	25	13	White	▬ ▬ ▬	Red
	26			▬ ▬ ▬	Black

Cable O.D.

Product no.	Ø D
LEC-CSNA-1	11.1

Dimensions/Pin No.

Product no.	W	H	T	U	Pin no. n
LEC-CSNA-1	39	37.2	12.7	14	14

Options

MECHATROLINK cable type

LEC−CY M − 1

Motor type

Y	AC servo motor

Cable description

M	MECHATROLINK-Ⅱ cable
U	MECHATROLINK-Ⅲ cable

Cable length (L)

L*1	0.2 m
J	0.5 m
1	1 m
3	3 m

*1 Not available for the MECHATROLINK-Ⅱ cable

* LEC-CYM-□ is JEPMC-W6002-□□-E manufactured by YASKAWA CONTROLS CO., LTD.
* LEC-CYU-□ is JEPMC-W6012-□□-E manufactured by YASKAWA CONTROLS CO., LTD.

MECHATROLINK-Ⅱ cable

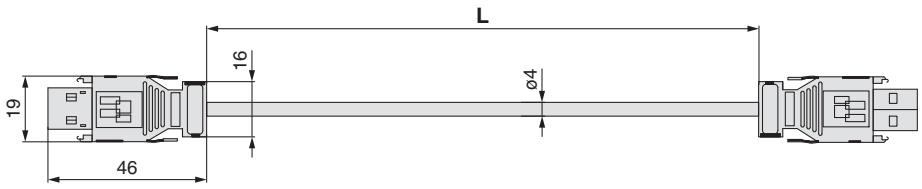

Weight

Product no.	Length [m]	Weight [g]
LE-CYM-J	0.5	50
LE-CYM-1	1	80
LE-CYM-3	3	200

MECHATROLINK-Ⅲ cable

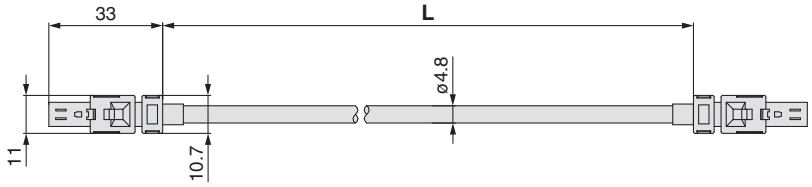

Weight

Product no.	Length [m]	Weight [g]
LE-CYU-L	0.2	21
LE-CYU-J	0.5	41
LE-CYU-1	1	75
LE-CYU-3	3	205

Terminating connector for MECHATROLINK-Ⅱ

LEC−CYRM

* LEC-CYRM is JEPMC-W6022-E manufactured by YASKAWA CONTROLS CO., LTD.

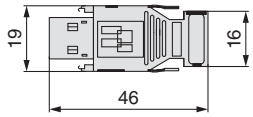

Weight: 10 g

Options

LECYM2 LECYU2
Drivers

USB cable

PC

Setup software (SigmaWin+™) (LECYM/LECYU common)

∗ Please download the SigmaWin+™ via our website.
SigmaWin+™ is a registered trademark or trademark of YASKAWA Electric Corporation.

Adjustment, waveform display, parameter read/write, and test operation can be performed upon a PC.

Compatible PC

When using setup software (SigmaWin+™), use an IBM PC/AT compatible PC that meets the following operating conditions.

Hardware Requirements

Equipment		Setup software (SigmaWin+™)
PC ∗1, 2, 3, 4	OS	Windows® XP∗5, Windows Vista®, Windows® 7 (32-bit/64-bit)
	Available HD space	350 MB or more (When the software is installed, 400 MB or more is recommended.)
	Communication interface	Use USB port.
Display		XVGA monitor (1024 x 768 or more, "The small font is used.") 256 colour or more (65536 colour or more is recommended.) Connectable with the PC above
Keyboard		Connectable with the PC above
Mouse		Connectable with the PC above
Printer		Connectable with the PC above
USB cable		LEC-JZ-CVUSB∗6
Other		Adobe Reader Ver. 5.0 or higher (∗ Except Ver. 6.0)

∗1 Windows, Windows Vista®, Windows® 7 are registered trademarks of Microsoft Corporation in the United States and/or other countries.
∗2 On some PCs, this software may not run properly.
∗3 Not compatible with 64-bit Windows® XP and 64-bit Windows Vista®
∗4 For Windows® XP, please use it by the administrator authority (When installing and using it.).
∗5 In PC that uses the program to correct the problem of HotfixQ328310, it is likely to fail in the installation. In that case, please use the program to correct the problem of HotfixQ329623.
∗6 Order USB cable separately.

Battery (LECYM/LECYU common)

LEC−JZ−CVBAT

∗ JZSP-BA01 manufactured by YASKAWA CONTROLS CO., LTD.

Battery for replacement
Absolute position data is maintained by installing the battery to the battery case of the encoder cable.

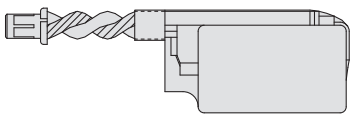

Weight: 10 g

∗ The LEC-JZ-CVBAT is a single battery that uses lithium metal battery ER3V.
When transporting lithium metal batteries and devices with built-in lithium metal batteries by a method subject to UN regulations, it is necessary to apply measures according to the regulations stipulated in the United Nations Recommendations on the Transport of Dangerous Goods, the Technical Instructions (ICAO-TI) of the International Civil Aviation Organisation (ICAO), and the International Maritime Dangerous Goods Code (IMDG CODE) of the International Maritime Organisation (IMO). If a customer is transporting products such as shown above, it is necessary to confirm the latest regulations, or the laws and regulations of the country of transport on your own, in order to apply the proper measures. Please contact SMC sales representative for details.

USB cable (2.5 m)

LEC−JZ−CVUSB

∗ JZSP-CVS06-02-E manufactured by YASKAWA CONTROLS CO., LTD.

Cable for connecting PC and driver when using the setup software (SigmaWin+™)
Do not use any cable other than this cable.

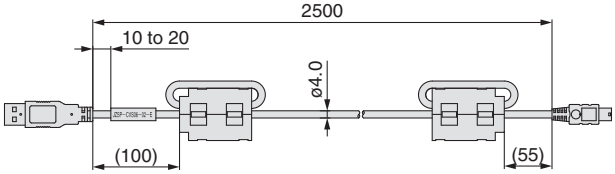

Weight: 150 g

Cable for safety function device (3 m)

LEC−JZ−CVSAF

∗ JZSP-CVH03-03-E manufactured by YASKAWA CONTROLS CO., LTD.

Cable for connecting the driver and device when using the safety function
Do not use any cable other than this cable.

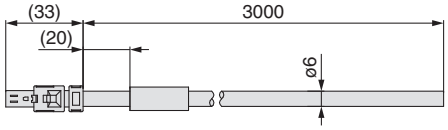

Weight: 160 g

LECYM/LECYU Series
AC Servo Motor Driver
Specific Product Precautions 1

Be sure to read this before handling the products. Refer to the back cover for safety instructions. For electric actuator and auto switch precautions, refer to the "Handling Precautions for SMC Products" and the "Operation Manual" on the SMC website: https://www.smc.eu

Design / Selection

⚠Warning

1. Be sure to apply the specified voltage.
Otherwise, malfunction or breakage may occur. If the applied voltage is lower than the specified voltage, it is possible that the load will not be able to be moved due to an internal voltage drop of the driver. Please check the operating voltage before use.

2. Do not operate the product beyond the specifications.
Otherwise, a fire, malfunction, or actuator damage may result. Please check the specifications before use.

3. Install an emergency stop circuit.
Please install an emergency stop outside of the enclosure so that the system operation can be stopped immediately and the power supply can be intercepted.

4. In order to prevent any damage caused by the breakdown or malfunction of the driver and its peripheral devices, a backup system should be established in advance by giving a multiple-layered structure or a fail-safe design to the equipment, etc.

5. If a danger of human injury is expected due to abnormal heat generation, smoking, ignition, etc., of the driver and its peripheral devices, cut off the power supply of the product and the system immediately.

Handling

⚠Warning

1. Do not touch the inside of the driver and its peripheral devices.
Doing so may cause an electric shock or damage to the driver.

2. Do not perform the operation or setting of the product with wet hands.
Doing so may cause an electric shock.

3. Products with damage or those missing any components should not be used.
An electric shock, fire, or injury may result.

4. Use only the specified combination between the electric actuator and driver.
Failure to do so may cause damage to the actuator or the driver.

5. Be careful not to be hit by workpieces while the actuator is moving.
It may cause an injury.

6. Do not connect the power supply or power on the product before confirming the area to which the workpiece moves is safe.
The movement of the workpiece may cause an accident.

7. Do not touch the product when it is energised and for some time after power has been disconnected, as it is very hot.
Doing so may lead to a burn due to the high temperature.

8. Before installation, wiring, and maintenance, the voltage should be checked with a tester 5 minutes after the power supply has been turned off.
Otherwise, an electric shock, fire, or injury may result.

Handling

⚠Warning

9. Static electricity may cause malfunction or break the driver. Do not touch the driver while power is supplied.
When touching the driver for maintenance, take sufficient measures to eliminate static electricity.

10. Do not use the product in an area where dust, powder dust, water, chemicals, or oil is in the air.
It will cause failure or malfunction.

11. Do not use the product in an area where a magnetic field is generated.
It will cause failure or malfunction.

12. Do not install the product in an environment containing flammable gas, explosive gas, or corrosive gas.
It could lead to fire, explosion, or corrosion.

13. Radiant heat from strong heat sources, such as a furnace, direct sunlight, etc., should not be applied to the product.
It will cause failure of the driver or its peripheral devices.

14. Do not use the product in an environment subject to a temperature cycle.
It will cause failure of the driver or its peripheral devices.

15. Do not use the product in a place where surges are generated.
When there are units that generate a large amount of surge around the product (e.g. solenoid type lifters, high-frequency induction furnaces, motors, etc.), this may cause deterioration or damage to the product's internal circuit. Avoid sources of surge generation and crossed lines.

16. Do not install the product in an environment under the effect of vibrations and impacts.
It will cause failure or malfunction.

17. When a surge-generating load, such as a relay or solenoid valve, is driven directly, use a product that incorporates a surge absorption element.

Installation

⚠Warning

1. Install the driver and its peripheral devices on a fireproof material.
Direct installation on or near a flammable material may cause a fire.

2. Do not install the product in a place subject to vibrations and impacts.
It will cause failure or malfunction.

3. The driver should be mounted on a vertical wall in a vertical direction. Also, be sure not to cover the driver's suction/exhaust ports.

4. Install the driver and its peripheral devices on a flat surface.
If the mounting surface is distorted or uneven, an unacceptable force may be added to the housing, etc., causing problems.

LECYM/LECYU Series
AC Servo Motor Driver
Specific Product Precautions 2

Be sure to read this before handling the products. Refer to the back cover for safety instructions. For electric actuator and auto switch precautions, refer to the "Handling Precautions for SMC Products" and the "Operation Manual" on the SMC website: https://www.smc.eu

Power Supply

⚠Caution

1. **Use a power supply that has low noise between lines and between the power and ground.**
   In cases where noise is high, an isolation transformer should be used.
2. **To prevent lightning surges, appropriate measures should be taken. Ground the surge absorber for lightning separately from the grounding of the driver and its peripheral devices.**

Wiring

⚠Warning

1. **The driver will be damaged if a commercial power supply (100/200 V) is added to the driver's servo motor power (U, V, and W). Be sure to check wiring for mistakes when the power supply is turned on.**
2. **Connect the ends of the U, V, and W wires of the motor cable correctly to the phases (U, V, and W) of the servo motor power. If these wires do not match up, the servo motor cannot be controlled.**

Grounding

⚠Warning

1. **For grounding the actuator, connect the copper wire of the actuator to the driver's protective earth (PE) terminal and connect the copper wire of the driver to the earth via the control panel's protective earth (PE) terminal.**
   Do not connect them directly to the control panel's protective earth (PE) terminal.

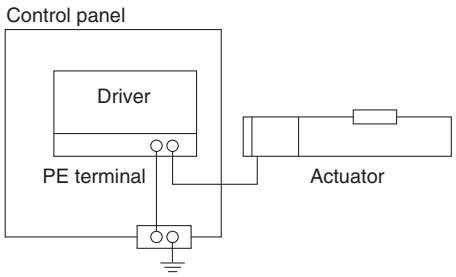

2. **In the unlikely event that a malfunction is caused by the ground, please disconnect it.**

Maintenance

⚠Warning

1. **Perform a maintenance and inspection periodically.**
   Confirm wiring and screws are not loose.
   Loose screws or wires may cause unintentional malfunction.
2. **Conduct an appropriate functional inspection after completing the maintenance and inspection.**
   At times where the equipment or machinery does not operate properly, conduct an emergency stop of the system. Otherwise, an unexpected malfunction may occur and it will become impossible to ensure safety. Conduct a test of the emergency stop in order to confirm the safety of the equipment.
3. **Do not disassemble, modify, or repair the driver and its peripheral devices.**
4. **Do not put anything conductive or flammable inside the driver.**
   It may cause a fire.
5. **Do not conduct an insulation resistance test or withstand voltage test on this product.**
6. **Ensure sufficient space for maintenance activities.**
   Design the system allowing the required space for maintenance and inspection.

⚠ Safety Instructions

These safety instructions are intended to prevent hazardous situations and/or equipment damage. These instructions indicate the level of potential hazard with the labels of **"Caution," "Warning"** or **"Danger."** They are all important notes for safety and must be followed in addition to International Standards (ISO/IEC) [1], and other safety regulations.

⚠ **Caution:**	**Caution** indicates a hazard with a low level of risk which, if not avoided, could result in minor or moderate injury.
⚠ **Warning:**	**Warning** indicates a hazard with a medium level of risk which, if not avoided, could result in death or serious injury.
⚠ **Danger:**	**Danger** indicates a hazard with a high level of risk which, if not avoided, will result in death or serious injury.

1) ISO 4414: Pneumatic fluid power – General rules relating to systems.
ISO 4413: Hydraulic fluid power – General rules relating to systems.
IEC 60204-1: Safety of machinery – Electrical equipment of machines. (Part 1: General requirements)
ISO 10218-1: Manipulating industrial robots - Safety.
etc.

⚠ Warning

1. The compatibility of the product is the responsibility of the person who designs the equipment or decides its specifications.
Since the product specified here is used under various operating conditions, its compatibility with specific equipment must be decided by the person who designs the equipment or decides its specifications based on necessary analysis and test results. The expected performance and safety assurance of the equipment will be the responsibility of the person who has determined its compatibility with the product. This person should also continuously review all specifications of the product referring to its latest catalogue information, with a view to giving due consideration to any possibility of equipment failure when configuring the equipment.

2. Only personnel with appropriate training should operate machinery and equipment.
The product specified here may become unsafe if handled incorrectly. The assembly, operation and maintenance of machines or equipment including our products must be performed by an operator who is appropriately trained and experienced.

3. Do not service or attempt to remove product and machinery/ equipment until safety is confirmed.
1. The inspection and maintenance of machinery/equipment should only be performed after measures to prevent falling or runaway of the driven objects have been confirmed.
2. When the product is to be removed, confirm that the safety measures as mentioned above are implemented and the power from any appropriate source is cut, and read and understand the specific product precautions of all relevant products carefully.
3. Before machinery/equipment is restarted, take measures to prevent unexpected operation and malfunction.

4. Contact SMC beforehand and take special consideration of safety measures if the product is to be used in any of the following conditions.
1. Conditions and environments outside of the given specifications, or use outdoors or in a place exposed to direct sunlight.
2. Installation on equipment in conjunction with atomic energy, railways, air navigation, space, shipping, vehicles, military, medical treatment, combustion and recreation, or equipment in contact with food and beverages, emergency stop circuits, clutch and brake circuits in press applications, safety equipment or other applications unsuitable for the standard specifications described in the product catalogue.
3. An application which could have negative effects on people, property, or animals requiring special safety analysis.
4. Use in an interlock circuit, which requires the provision of double interlock for possible failure by using a mechanical protective function, and periodical checks to confirm proper operation.

⚠ Caution

1. The product is provided for use in manufacturing industries.
The product herein described is basically provided for peaceful use in manufacturing industries.
If considering using the product in other industries, consult SMC beforehand and exchange specifications or a contract if necessary.
If anything is unclear, contact your nearest sales branch.

Limited warranty and Disclaimer/Compliance Requirements

The product used is subject to the following "Limited warranty and Disclaimer" and "Compliance Requirements".Read and accept them before using the product.

Limited warranty and Disclaimer

1. The warranty period of the product is 1 year in service or 1.5 years after the product is delivered, whichever is first. [2] Also, the product may have specified durability, running distance or replacement parts. Please consult your nearest sales branch.
2. For any failure or damage reported within the warranty period which is clearly our responsibility, a replacement product or necessary parts will be provided. This limited warranty applies only to our product independently, and not to any other damage incurred due to the failure of the product.
3. Prior to using SMC products, please read and understand the warranty terms and disclaimers noted in the specified catalogue for the particular products.

2) Vacuum pads are excluded from this 1 year warranty.
A vacuum pad is a consumable part, so it is warranted for a year after it is delivered. Also, even within the warranty period, the wear of a product due to the use of the vacuum pad or failure due to the deterioration of rubber material are not covered by the limited warranty.

Compliance Requirements

1. The use of SMC products with production equipment for the manufacture of weapons of mass destruction (WMD) or any other weapon is strictly prohibited.
2. The exports of SMC products or technology from one country to another are governed by the relevant security laws and regulations of the countries involved in the transaction. Prior to the shipment of a SMC product to another country, assure that all local rules governing that export are known and followed.

⚠ Caution

SMC products are not intended for use as instruments for legal metrology.
Measurement instruments that SMC manufactures or sells have not been qualified by type approval tests relevant to the metrology (measurement) laws of each country.
Therefore, SMC products cannot be used for business or certification ordained by the metrology (measurement) laws of each country.

Revision History

Edition C	- The in-line motor type LEYD series has been added. - The guide rod type LEYG series has been added. - The guide rod type/in-line motor type LEYGD series has been added. - The LECP1 series programless controller has been added. - A standard cable has been added to the actuator cable types. - The AC servo motor (100/200 W) type LEYS series has been added. - The LECSA/LECSB series AC servo motor driver has been added. - Number of pages has been increased from 38 to 94.	PY
Edition D	- Size 40 has been added to the LEY/LEYG series step motor (servo/24 VDC). - Size 63 has been added to the AC servo motor rod type LEY series. - The dust-tight/water-jet-proof specification has been added to the rod type. - Sizes 25 and 32 have been added to the AC servo motor guide rod type LEYG series. - The LECPA series step motor driver has been added. - The LEC-G series gateway unit has been added. - The LECSC/LECSS series AC servo motor driver has been added. - UL-compliant products have been added. - The controller setting kit (LEC-W2) has been changed. - Number of pages has been increased from 94 to 160.	RP
Edition E	- Intermediate strokes have been added to the LEY63. - Normally-closed solid state auto switches have been added. - The JXC series step motor controller has been added. - The controller setting kit has been changed to the communication cable for controller setting (LEC-W2A). - Errors in text have been corrected. - Number of pages has been increased from 160 to 286.	YR

SMC Corporation (Europe)

Austria	+43 (0)2262622800	www.smc.at	office@smc.at
Belgium	+32 (0)33551464	www.smc.be	info@smc.be
Bulgaria	+359 (0)2807670	www.smc.bg	office@smc.bg
Croatia	+385 (0)13707288	www.smc.hr	office@smc.hr
Czech Republic	+420 541424611	www.smc.cz	office@smc.cz
Denmark	+45 70252900	www.smcdk.com	smc@smcdk.com
Estonia	+372 6510370	www.smcpneumatics.ee	info@smcee.ee
Finland	+358 207513513	www.smc.fi	smcfi@smc.fi
France	+33 (0)164761000	www.smc-france.fr	info@smc-france.fr
Germany	+49 (0)61034020	www.smc.de	info@smc.de
Greece	+30 210 2717265	www.smchellas.gr	sales@smchellas.gr
Hungary	+36 23513000	www.smc.hu	office@smc.hu
Ireland	+353 (0)14039000	www.smcautomation.ie	sales@smcautomation.ie
Italy	+39 03990691	www.smcitalia.it	mailbox@smcitalia.it
Latvia	+371 67817700	www.smc.lv	info@smc.lv
Lithuania	+370 5 2308118	www.smclt.lt	info@smclt.lt
Netherlands	+31 (0)205318888	www.smc.nl	info@smc.nl
Norway	+47 67129020	www.smc-norge.no	post@smc-norge.no
Poland	+48 222119600	www.smc.pl	office@smc.pl
Portugal	+351 214724500	www.smc.eu	apoioclientept@smc.smces.es
Romania	+40 213205111	www.smcromania.ro	smcromania@smcromania.ro
Russia	+7 8123036600	www.smc.eu	sales@smcru.com
Slovakia	+421 (0)413213212	www.smc.sk	office@smc.sk
Slovenia	+386 (0)73885412	www.smc.si	office@smc.si
Spain	+34 945184100	www.smc.eu	post@smc.smces.es
Sweden	+46 (0)86031200	www.smc.nu	smc@smc.nu
Switzerland	+41 (0)523963131	www.smc.ch	helpcentre@smc.ch
Turkey	+90 212 489 0 440	www.smcpnomatik.com.tr	info@smcpnomatik.com.tr
UK	+44 (0)845 121 5122	www.smc.uk	sales@smc.uk

Printing YZ 00 Printed in Spain

Specifications are subject to change without prior notice and any obligation on the part of the manufacturer